SIZE E DWG NO 120E3450 SH 1 REV –

REVISIONS

REV	DESCRIPTION	DATE	APPROVED

REVISE ON CAD ONLY
UG PART: 120E3450P001

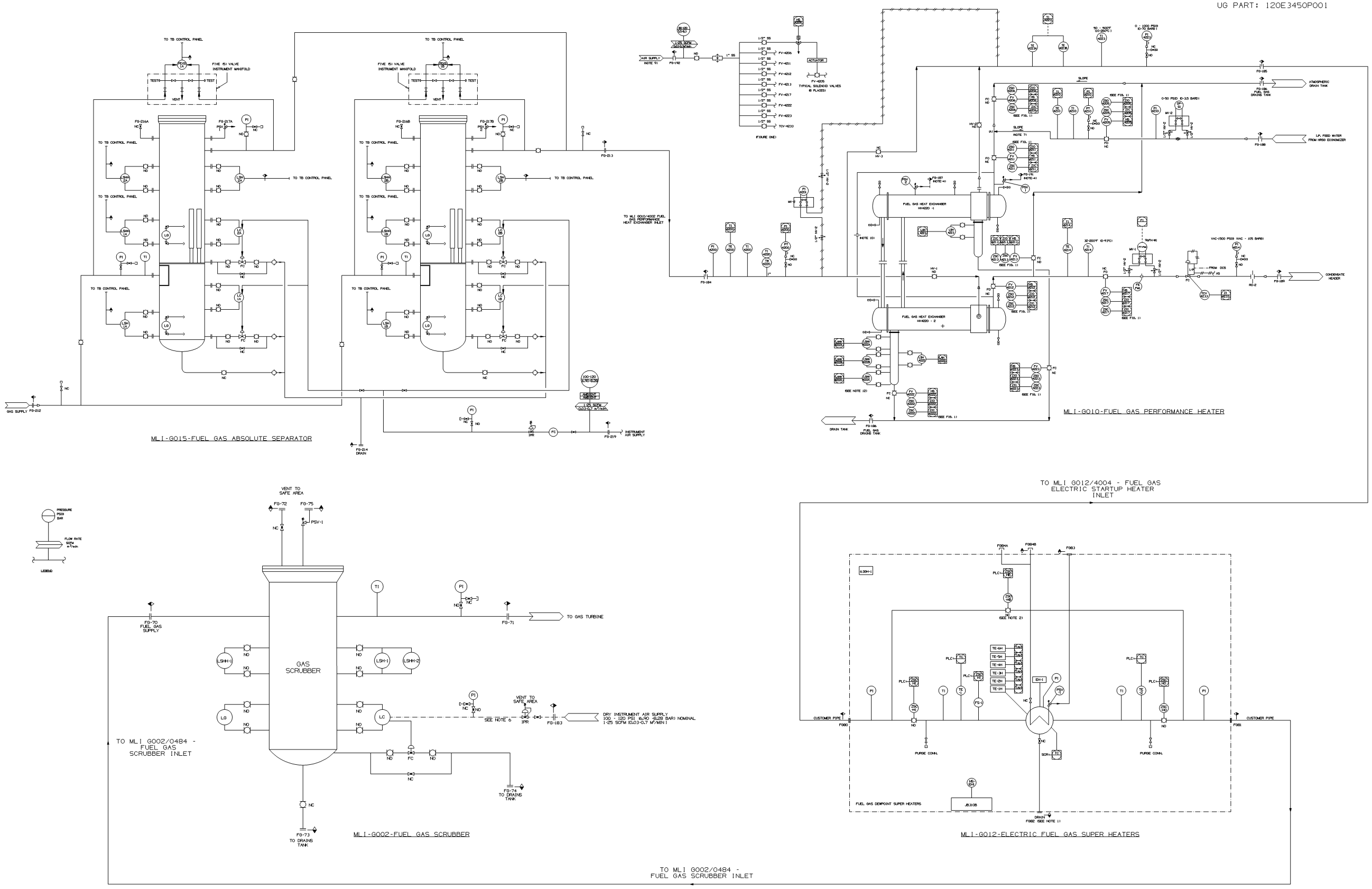

THIRD ANGLE PROJECTION

UNLESS OTHERWISE SPECIFIED	SIGNATURES	DATE
DIMENSIONS ARE IN INCHES TOLERANCES ON:	DRAWN SAMIR BISHOYI	04-04-26
2 PL DECIMALS ±	CHECKED KANAGARAJAN V	04-04-26
3 PL DECIMALS ±	ENGRG KANAGARAJAN V	04-04-26
ANGLES ±	ISSUED SAMIR BISHOYI	04-04-26
FRACTIONS ±		
APPLIED PRACTICES 348A5200		
	SIM TO:	NONE

GE Power Generation — GENERAL ELECTRIC COMPANY GAS TURBINE Schenectady, NY

DIAG-SCHEM PP-FUEL GAS CONDITIONING

FIRST MADE FOR ML-9A1WFA83-1 0482

SIZE E | CAGE CODE | DWG NO 120E3450 | REV

SCALE NONE | SHEET 1

REVISIONS			
REV	DESCRIPTION	DATE	APPROVED

REVISE ON CAD ONLY
UG PART: 120E3450P001

NOTES :

1. SEE NOTE 123E4888 FOR P&ID SYMBOL DEFINITION.
2. ALLOWABLE PRESSURE DROP ON FUEL GAS CONDITIONING EQUIPMENTS:
   MLI G015/4007 : FUEL GAS ABSOLUTE SEPARATOR
   MAXIMUM DESIGN FUEL GAS (INLET TO OUTLET) PRESSURE DROP ACROSS AND 5 PSID(0.34 BARD) FOR CLEAN FUEL.

   MLI G010/4002 : FUEL GAS PERFORMANCE HEAT EXCHANGER
   MAXIMUM DESIGN FUEL GAS (INLET TO OUTLET) PRESSURE DROP ACROSS ENTIRE HEATER AT RATED FLOW AND OPERATING PRESSURE: 15 PSID (1.03 BARD)

   MLI G012/4004 : FUEL GAS ELECTRIC STARTUP HEATER
   MAXIMUM DESIGN FUEL GAS (INLET TO OUTLET) PRESSURE DROP ACROSS HEATER VESSEL AT RATED FLOW AND OPERATING PRESSURE: 10 PSID(0.69 BARD)

   MLI G002/0484: FUEL GAS SCRUBBER
   MAXIMUM DESIGN FUEL GAS (INLET TO OUTLET) PRESSURE DROP ACROSS SCRUBBER VESSEL AT RATED FLOW AND OPERATING PRESSURE: 3 PSID (0.21 BARD)
3. PRESSURE, TEMPERATURE & FLOW VALUES AT THE PC CONNECTIONS FG188, FG189, FG190, FG191 WILL BE PROVIDED BY THE HRSG SUPPLIER.
4. INSTALLER SHALL ROUTE ALL NATURAL GAS VENTS TO A NATURALLY VENTILATED AREA OUTSIDE OF ANY BUILDING OR ENCLOSURES, FREE FROM ANY SOURCES OF IGNITION IN ACCORDANCE WITH GEK 110743 AND IN ACCORDANCE WITH ALL APPLICABLE SAFETY CODES AND STANDARDS.
5. GE SUPPLY ◇ BY OTHERS

INTERFACE POINT NAME	CONNECTION DESCRIPTION	DWG ZONE/ SHT NO.	FLUID TYPE	MIN. PRESSURE PSIG(BAR)	MAX. PRESSURE PSIG(BAR)	MIN. TEMPERATURE °F [°C]	MAX. TEMPERATURE °F [°C]	MIN. FLOW SCFM [LB/HR]	MAX. FLOW SCFM [LB/HR]
FG70	INLET	SHT1 D7	GAS	443 (30.54)	475 (32.75)	50 (10)	365 (185)	10910 (309)	45050 (1276)
FG71	OUTLET	SHT1 D5	GAS	443 (30.54)	475 (32.75)	50 (10)	365 (185)	10910 (309)	45050 (1276)
FG72	VENT	SHT1 D7	GAS	443 (30.54)	475 (32.75)	50 (10)	365 (185)	–	–
FG73	MANUAL DRAIN	SHT1 B7	GAS	443 (30.54)	475 (32.75)	50 (10)	365 (185)	–	–
FG74	AUTOMATIC DRAIN	SHT1 B5	GAS	443 (30.54)	475 (32.75)	50 (10)	365 (185)	–	–
FG75	RELIEF VALVE	SHT1 D7	GAS	443 (30.54)	475 (32.75)	50 (10)	365 (185)	10910 (309)	45050 (1276)
FG80	INLET HEATER SKID	SHT1 C4	GAS	443 (30.54)	475 (32.75)	50 (10)	365 (185)	10910 (309)	45050 (1276)
FG81	OUTLET HEATER SKID	SHT1 C1	GAS	443 (30.54)	475 (32.75)	50 (10)	365 (185)	–	–
FG82	HEATER DRAIN	SHT1 B2	GAS	443 (30.54)	475 (32.75)	50 (10)	365 (185)	–	–
FG83	PRESSURE RELIEF VALVE	SHT1 D2	GAS	443 (30.54)	475 (32.75)	50 (10)	365 (185)	10910 (309)	45050 (1276)
FG84A,B	CAPPED VENT	SHT1 D3	GAS	443 (30.54)	475 (32.75)	50 (10)	365 (185)	–	–
FG184	GAS INLET	SHT1 F4	GAS	443 (30.54)	475 (32.75)	50 (10)	365 (185)	10910 (309)	45050 (1276)
FG185	GAS OUTLET	SHT1 G1	GAS	443 (30.54)	475 (32.75)	50 (10)	365 (185)	10910 (309)	45050 (1276)
FG186	SUMP DRAINS	SHT1 E4	GAS	443 (30.54)	475 (32.75)	50 (10)	365 (185)	–	–
FG187	RELIEF VALVE GAS	SHT1 G3	GAS	443 (30.54)	475 (32.75)	50 (10)	365 (185)	–	–
FG188	WATER INLET	SHT1 G1	FEED WATER	SEE NOTE 3	SEE NOTE 3	SEE NOTE 3	SEE NOTE 3	SEE NOTE 3	SEE NOTE 3
FG189	WATER OUTLET	SHT1 F1	FEED WATER	SEE NOTE 3	SEE NOTE 3	SEE NOTE 3	SEE NOTE 3	SEE NOTE 3	SEE NOTE 3
FG190	WATER VENT	SHT1 G1	FEED WATER	SEE NOTE 3	SEE NOTE 3	SEE NOTE 3	SEE NOTE 3	SEE NOTE 3	SEE NOTE 3
FG191	RELIEF VALVE-WATER	SHT1 G3	FEED WATER	SEE NOTE 3	SEE NOTE 3	SEE NOTE 3	SEE NOTE 3	SEE NOTE 3	SEE NOTE 3
FG192	INSTRUMENT AIR	SHT1 H5	AIR	60 (4.14)	120 (8.27)	AMBIENT	150 (65.5)	1	25
FG212	INLET	SHT1 E8	GAS	443 (30.54)	475 (32.75)	50 (10)	250 (121.11)	10910 (309)	45050 (1276)
FG213	OUTLET	SHT1 G5	GAS	443 (30.54)	475 (32.75)	50 (10)	250 (121.11)	10910 (309)	45050 (1276)
FG215	DRAIN	SHT1 E6	GAS	443 (30.54)	475 (32.75)	50 (10)	250 (121.11)	–	–
FG216A	VENT	SHT1 G7	GAS	443 (30.54)	475 (32.75)	50 (10)	250 (121.11)	–	–
FG216B	VENT	SHT1 G6	GAS	443 (30.54)	475 (32.75)	50 (10)	250 (121.11)	–	–
FG217A	RELIEF VALVE DISCHARGE	SHT1 G7	GAS	443 (30.54)	475 (32.75)	50 (10)	250 (121.11)	–	–
FG217B	RELIEF VALVE DISCHARGE	SHT1 G6	GAS	443 (30.54)	475 (32.75)	50 (10)	250 (121.11)	–	–
FG219	INSTRUMENT AIR	SHT1 E5	AIR	60 (4.14)	120 (8.27)	AMBIENT	150 (65.5)	1	25

NOTES:

1. SEE DEVICE SUMMARY (MLI 0414) FOR DEVICE SETTINGS, RATINGS AND RANGES.
2. FG2, FG3, FG25, FG425, FG426, FG428A, FG428B, FG438, AND FG439 ARE POTENTIAL ZONE 1 GROUP IIA SOURCES. INSTALLER SHALL ROUTE THESE VENTS TO A NATURALLY VENTILATED AREA OUTSIDE OF ANY BUILDINGS OR ENCLOSURES, FREE FROM ANY SOURCES OF IGNITION IN ACCORDANCE WITH GEK 110743 AND MLI 0331. THE EXTENT OF THE HAZARDOUS AREAS FOR THESE VENTS AND OTHER INFORMATION AND RECOMMENDATIONS TO ASSIST THE INSTALLER IS GIVEN IN MLI 0331. THE LOCATION OF THE TERMINATION POINTS SHALL BE SUCH THAT NONE OF THE RESULTANT HAZARDOUS AREAS INTERSECT WITH ANY VENTILATION FRESH AIR INTAKES, WITH THE GAS TURBINE INLET, OR WITH ANY EQUIPMENT NOT RATED FOR THE RESULTANT HAZARDOUS AREA.
3. FOLLOW API 14.3 / AGA REPORT 3 FOR INSTALLATION AND REQUIREMENTS FOR PIPE LENGTH PRECEDING AND FOLLOWING METER TUBE, MG2-1.
4. METER TUBE MG2-1 ORIFICE DIAMETER TO BE DETERMINED BY SUPPLIER USING G.E. ORDERING SHEET DATA. PRESSURE DROP FROM FG20 TO FG21 SHALL BE 5 PSID [0.34 BARD].
5. REFER TO MLI 0331, HAZARDOUS AREA MAP AND NOTES FOR INFORMATION ON HAZARDOUS AREAS AND RATINGS OF G.E. SUPPLIED EQUIPMENT. IT IS THE RESPONSIBILITY OF THE CUSTOMER/INSTALLER TO CARRY OUT ANY NECESSARY FURTHER POWER PLANT HAZARDOUS AREA CLASSIFICATION STUDIES AND TO DESIGN AND INSTALL THE PIPING AND EQUIPMENT IN ACCORDANCE WITH APPLICABLE SAFETY CODES AND STANDARDS. GUIDANCE AND INFORMATION IS GIVEN IN MLI 0331 TO ASSIST THE CUSTOMER IN THIS TASK.
6. BLEED VALVE TO BE OPEN AND EQUALIZER VALVES TO BE CLOSED DURING TURBINE OPERATION TO ENSURE ACCURATE GAS FLOW MEASUREMENTS.
7. A TEMPORARY CONICAL STRAINER SUPPLIED BY G.E. IS TO BE INSTALLED (SEE MLI A179).
8. CONSULT THE SERVICE MANUAL FOR WHEN TO CHANGE THE STRAINER BASKET(S).
9. AVOID REDUCERS AND MAINTAIN CONSTANT PIPE DIAMETER MATCHING THE FG1 FLANGE IN THE PIPING IMMEDIATELY UPSTREAM OF FG1.
10. CONNECTIONS FROM THE COMBUSTOR END COVER TO THE MANIFOLD SHOULD BE PITCHED DOWNWARD TOWARD MANIFOLD FOR PROPER DRAINAGE.
11. LOW POINT DRAIN BLANKED FLANGE CONNECTION.
12. SLOPED CONNECTION FROM GAS COMPARTMENT AND MANIFOLD TO LOW POINT CONNECTION.
13. FLUID VELOCITY SHALL BE LIMITED TO 200 FEET/SEC (61 M / SEC) IN INTERCONNECT PIPING.
14. NATURAL GAS LHV 947.4 BTU / SCF 21180 BTU / LB
15. START-UP MODE GAS TEMPERATURE AND NORMAL OPERATING GAS TEMPERATURE
    MAX: 365.0 °F [185 °C]

    MIN SUPERHEAT TEMP SHALL COMPLY WITH THE REQUIREMENTS STATED IN GEI 41040G. THE MAXIMUM RATE OF GAS TEMPERATURE CHANGE IS 2°F / SEC.

    STARTUP AND OPERATION IN DIFFUSION MODE - DIFFUSION NOZZLE ONLY. EITHER HEATED OR UNHEATED FUEL MAY BE USED. IF FUEL HEATING BECOMES UNAVAILABLE, THE UNIT OPERATION ABOVE DIFFUSION MODE POTENTIALLY WILL BE LIMITED BY LOAD OUTPUT, COMBUSTOR DYNAMICS OR EMISSIONS.
16. INSTRUMENT AIR REQUIRED IN ACCORDANCE WITH GEK-106689 (MLI 0438) AND / OR FROM AIR PROCESSING UNIT (MLI 0419 / M624) FROM AP2.
17. CUSTOMER/INSTALLER MUST PROVIDE AN ANSI CLASS VI ISOLATION VALVE UPSTREAM OF G.E. SUPPLIED EQUIPMENT IN ORDER TO ALLOW THIS EQUIPMENT TO BE ISOLATED FOR MAINTENANCE ETC.
18. CUSTOMER/INSTALLER MUST PROVIDE A PRESSURE RELIEVING DEVICE IN THE FUEL GAS SUPPLY PIPING UPSTREAM OF FG1 IN ACCORDANCE WITH ASME B31.3 AND CONSISTENT WITH A PIPING/EQUIPMENT DESIGN PRESSURE OF 515 PSIG [35.51 BARG].
19. GAS VALVE ORIENTATION TO BE ESTABLISHED SUCH THAT THERE ARE NO DIRECT FLOW PATHS FROM THE SRV EXIT TO A GAS CONTROL VALVE.
20. GAS FUEL MUST MEET GEI41040.
21. PRESSURE TAP FOR DELTA P PRESSURE TRANSMITTERS (96GN'S) SHALL BE LOCATED SUCH THAT THE LINE WILL SLOPE CONTINUOUSLY BACK FROM THE PRESSURE TRANSMITTER ARRANGEMENT TO THE MANIFOLD AND COMPRESSOR DISCHARGE CASING.
22. SEE MLI 0477 FOR REMOVAL OF PT-G1-1A, 1B, 2A, 2B, 3A, 3B.
23. MAXIMUM TEMPERATURE WILL BE 814° F [432° C] DURING PURGE AIR OPERATION AND THE VALUE SHOWN IN NOTE 15 DURING FUEL GAS OPERATION. A1
24. STRAINER VENTING VALVE HAS PROVISIONS FOR A LOCK AND SHALL BE LOCKED IN THE CLOSED POSITION DURING OPERATION. IN ORDER TO REMOVE BASKET FOR REPLACEMENT OR CLEANING FOLLOWING SHUTDOWN, ISOLATE FUEL GAS SUPPLY AT CUSTOMER PROVIDED UPSTREAM ISOLATION VALVE, VENT PRESSURE IN STRAINER AND ATTACHED PIPING BY OPENING THE VALVE. VERIFY PRESSURE HAS COMPLETELY VENTED BY CHECKING PRESSURE GAUGE PI-FG-1 AND BY MONITORING OUTPUT TRANSMITTER PT 96FG-1 BEFORE REMOVING STRAINER COVER IN ACCORDANCE WITH STRAINER MANUFACTURERS INSTRUCTIONS IN SERVICE MANUAL.
25. PRESSURE REGULATION AND CONTROL:
    -STEADY-STATE: SUPPLY PRESSURE AT FG1 AT ANY OPERATING POINT WITHIN THE GAS TURBINE CAPABILITY SHALL BE REGULATED WITHIN +/- 1% OF POINT, WITH PEAK-TO-PEAK PERIOD OF NOT LESS THAN 8 SECONDS (0.25% PER SECOND AVERAGE RATE OF CHANGE).
    -TRANSIENT: DURING TRANSIENTS MAXIMUM SUPPLY PRESSURE EXCURSIONS SHALL NOT EXCEED EITHER A 1% PER SECOND RAMP OR A 5% STEP. THE 1% PER SECOND RAMP LIMIT IS APPLICABLE OVER THE RANGE OF MINIMUM REQUIRED PRESSURE TO MAXIMUM OPERATING PRESSURE SPECIFIED IN THIS DRAWING. THE 5% STEP LIMIT IS APPLICABLE OVER THE RANGE OF MINIMUM REQUIRED PRESSURE TO 95% OF MAXIMUM OPERATING PRESSURE SPECIFIED IN THIS DRAWING AND WITH NO MORE THAN ONE 5% STEP CHANGE IN 5 SECONDS. THESE TRANSIENT LIMITS APPLY DURING BRIEF PERIODS ASSOCIATED WITH PRESSURE CONTROL MODE TRANSFERS SUCH AS TRANSFER BETWEEN GAS FUEL PRESSURE REGULATING VALVES, GAS COMPRESSOR CHANGEOVERS OR GAS SUPPLY SOURCE CHANGEOVERS, OR RAPID FUEL DEMAND TRANSIENTS SUCH AS GAS TURBINE LOAD REJECTIONS OR TRIPS.
26. DEVICES FROM THE GAS FUEL METERING TUBE ARE WIRED AS PART OF THE 96FM-1 MULTIVARIABLE TRANSMITTER. DEVICES ARE READ LOCALLY AT THE TURBINE CONTROL PANEL.
27. THE SAFETY SHUT OFF VALVE AND SAFETY SHUT OFF VENT VALVE ARE TO BE INSTALLED OUTDOORS. THE PIPING VOLUME BETWEEN THE OUTLET OF THE SAFETY SHUT OFF VALVE AND FG1 MUST NOT EXCEED 63.5 CUBIC FEET [1.8 CUBIC METERS]. THE SAFETY SHUT OFF VALVE AND SAFETY SHUT OFF VENT VALVE MUST BE INSTALLED SUCH THAT THEY ARE PROTECTED AGAINST ICING.
28. CROSSHATCHED ITEMS TO BE REMOVED.
29. VENTS SHALL BE ROUTED TO A NATURALLY VENTILATED AREA OUTSIDE OF ANY BUILDINGS OR ENCLOSURES, FREE FROM ANY SOURCES OF IGNITION IN ACCORDANCE WITH GEK110743 AND IN ACCORDANCE WITH ALL APPLICABLE SAFETY CODES AND STANDARDS. THE VENT SYMBOL SHOWN ON MLI 0422 IS REPRESENTATION ONLY. REFER TO GEK110743 FOR APPLICABLE VENT DESIGNS. THE PLANT DESIGNER SHALL LOCATE THE TERMINATION POINTS SUCH THAT NONE OF THE RESULTANT HAZARDOUS AREAS INTERSECT WITH ANY VENTILATION FRESH AIR INTAKES, WITH THE GAS TURBINE INLET, OR WITH ANY EQUIPMENT NOT RATED FOR THE RESULTANT HAZARDOUS AREAS. REFER TO MLI 0331 FOR THE HAZARDOUS AREA MAP. ANY DEVIATION FROM THE GEK1107743 RECOMMENDATIONS MAY INVALIDATE THE HAZARDOUS AREAS DEPICTED ON MLI 0331.

THIS DOCUMENT SHALL BE REVISED IN ITS ENTIRETY. ALL SHEETS OF THIS DOCUMENT ARE THE SAME REVISION LEVEL AS INDICATED.

REVISION HISTORY

REV	DESCRIPTION	DATE (YYYY-MM-DD)	APPROVED
A	LEGEND A1) REVISED A2) ADDED A3) DELETED	2021-09-16	BERNARD BEIER

INTERFACE POINT NAME	SHEET NO. DWG ZONE	FLUID TYPE	MINIMUM PRESSURE PSIG [BARG]	MIN TEMPERATURE °F [°C]	MIN FLOW LBS/S [KG/S]	MAXIMUM PRESSURE PSIG [BARG]	MAXIMUM TEMPERATURE °F [°C]	MAXIMUM FLOW LBS/S [KG/S]	CONNECTION DESCRIPTION	INTERFACE TYPE
FG1	SH 2 P1 & SH 3 F1	SEE NOTE 14	443.3 [31]	SEE NOTE 15	0	475 [33]	SEE NOTE 15	35 [16]	FUEL GAS INLET	GEPGE-OTHERS
FG2	SH 2 F10 & SH 3 G1	GAS	0	AMBIENT	0	475 [33]	SEE NOTE 15	0.765 [0.347]	FUEL GAS STRAINER VENT	GEPGE-OTHERS
FG3	SH 2 H10 & SH 3 A13	GAS	0	AMBIENT	0	150 [10.3]	SEE NOTE 15	1.0 [0.45]	GAS COMPARTMENT VALVE VENT	GEPGE-OTHERS
FG7	SH 2 H10 & SH 3 A16	AIR (SEE NOTE 16)	90 [6.2]	AMBIENT	0	120 [8.3]	150 [65]	30 SCFM (TRANSIENT)	INSTRUMENT AIR GAS PURGE VALVE	GEPGE-OTHERS
FG20	SH 3 F3	GAS	443.3 [31]	AMBIENT	0	475 [33]	SEE NOTE 15	35 [16]	FUEL GAS #1 METER TUBE INLET	GEPGE-OTHERS
FG21	SH 3 F7	GAS	443.3 [31]	AMBIENT	0	475 [33]	SEE NOTE 15	35 [16]	FUEL GAS #1 METER TUBE OUTLET	GEPGE-OTHERS
FG22	SH 3 E3	GAS	443.3 [31]	AMBIENT	0	475 [33]	SEE NOTE 15	0	FUEL GAS #1 METER TUBE SENSING LINE-UPSTREAM	GEPGE-OTHERS
FG23	SH 3 E5	GAS	443.3 [31]	AMBIENT	0	475 [33]	SEE NOTE 15	0	FUEL GAS #1 METER TUBE SENSING LINE-DOWNSTREAM	GEPGE-OTHERS
FG24	SH 3 E3	GAS	443.3 [31]	AMBIENT	0	475 [33]	SEE NOTE 15	0	FUEL GAS #1 5 VALVE MANIFOLD-HI PRESSURE INLET	GEPGE-OTHERS
FG25	SH 3 E4	GAS / AIR	0	AMBIENT	0	475 [33]	SEE NOTE 15	0	FUEL GAS #1 5 VALVE MANIFOLD-EQUALIZER VENT	GEPGE-OTHERS
FG26	SH 3 E5	GAS	443.3 [31]	AMBIENT	0	475 [33]	SEE NOTE 15	0	FUEL GAS #1 5 VALVE MANIFOLD-LO PRESSURE INLET	GEPGE-OTHERS
FG138	SH 2 J12 & SH3 F20	GAS	0	AMBIENT	0	400 [27.6]	SEE NOTE 15	10.35 [4.7]	FUEL GAS DIFFUSION DISCHARGE (AT GAS COMPARTMENT)	GEPGE-GEPGE
FG139	SH 2 L12 & SH3 H20	GAS	0	AMBIENT	0	400 [27.6]	SEE NOTE 15	5.56 [2.5]	FUEL GAS P1 DISCHARGE (AT GAS COMPARTMENT)	GEPGE-GEPGE
FG140	SH 2 N12 & SH3 K20	GAS/AIR	0	AMBIENT	0	400 [27.6]	SEE NOTE 23	21.6 [9.8]	FUEL GAS P4 DISCHARGE (AT GAS COMPARTMENT)	GEPGE-GEPGE
FG166A/B	SH 2 H19 & SH5 N10	GAS	0	AMBIENT	0	400 [27.6]	SEE NOTE 15	0	GAS NOZZLE DELTA PRESS TRANSMITTER SUPPLY TO MLI-557T (96GN-1)	GEPGE-GEPGE
FG167A/B	SH 2 K19 & SH5 N7	GAS	0	AMBIENT	0	400 [27.6]	SEE NOTE 15	0	GAS NOZZLE DELTA PRESS TRANSMITTER SUPPLY TO MLI-557T (96GN-2)	GEPGE-GEPGE
FG168A/B	SH 2 M19 & SH5 N14	GAS/AIR	0	AMBIENT	0	400 [27.6]	SEE NOTE 23	0	GAS NOZZLE DELTA PRESS TRANSMITTER SUPPLY TO MLI-557T (96GN-3)	GEPGE-GEPGE
HF300	SH 2 L12	OIL	1300 [89.6]	110 [43.3]	-	3000 [206.8]	150 [65.5]	0.5 [1.9]	TRIP OIL SUPPLY	GEPGE-GEPGE
HF301	SH 2 J12	OIL	1300 [89.6]	110 [43.3]	-	3000 [206.8]	150 [65.5]	10 [37.9]	HYDRAULIC OIL DRAIN	GEPGE-GEPGE
HF302	SH 3 P12	OIL	1300 [89.6]	110 [43.3]	-	3000 [206.8]	150 [65.5]	10 [37.9]	HYDRAULIC OIL SUPPLY	GEPGE-GEPGE
FG425	SH 2 P5	GAS	0 [0]	AMBIENT	0 [0]	475 [33]	SEE NOTE 15	35 [16]	SAFETY SHUTOFF STOP VALVE INLET	GEPGE-OTHERS
FG426	SH 2 P8	GAS	0 [0]	AMBIENT	0 [0]	475 [33]	SEE NOTE 15	35 [16]	SAFETY SHUTOFF STOP VALVE OUTLET	GEPGE-OTHERS
A1 FG427	SH 2 M6	AIR (SEE NOTE 16)	90 [6.2]	AMBIENT	0 [0]	120 [8.3]	150 [65]	30 SCFM (TRANSIENT)	INSTRUMENT AIR GAS SAFETY SHUT OFF STOP VALVE	GEPGE-OTHERS
FG428	SH 2 M5	GAS	0 [0]	AMBIENT	0 [0]	475 [33]	SEE NOTE 15	35 [16]	SAFETY SHUTOFF STOP VALVE STEM PACKING LEAK OFF	GEPGE-OTHERS
FG438	SH 2 L8	GAS	443.3 [31]	AMBIENT	0 [0]	475 [33]	SEE NOTE 15	35 [16]	SAFETY SHUTOFF VENT VALVE INLET	GEPGE-OTHERS
FG439	SH 2 L5	GAS	0 [0]	AMBIENT	0 [0]	475 [33]	SEE NOTE 15	35 [16]	SAFETY SHUTOFF VENT VALVE OUTLET	GEPGE-OTHERS
A1 FG440	SH 2 J6	AIR (SEE NOTE 16)	90 [6.2]	AMBIENT	0 [0]	120 [8.3]	150 [65]	30 SCFM (TRANSIENT)	INSTRUMENT AIR GAS SAFETY SHUT OFF VENT VALVE	GEPGE-OTHERS

THIS DRAWING MODIFIES THE EXISTING MLI 0422 DRAWING

GE CLASS II (INTERNAL NON-CRITICAL) /NOT EXPORT CONTROLLED

THIRD ANGLE PROJECTION

SIMILAR TO	FIRST MADE FOR	IEC61355 No.	MLI NO.
120E3355	367A6413G005	NONE	0422
CREATED BY	APPROVED BY	DOCUMENT TYPE	REVISION
BASHA	BEIER,BERNARD	SCHEMATIC	A

GE POWER

TITLE: DIAG. SCH. PP-FUEL GAS

CREATION DATE (YYYY-MM-DD)	SHEET SIZE	DRAWING NO.	SHEET
2021-07-19	E	140T0386	1 OF 5

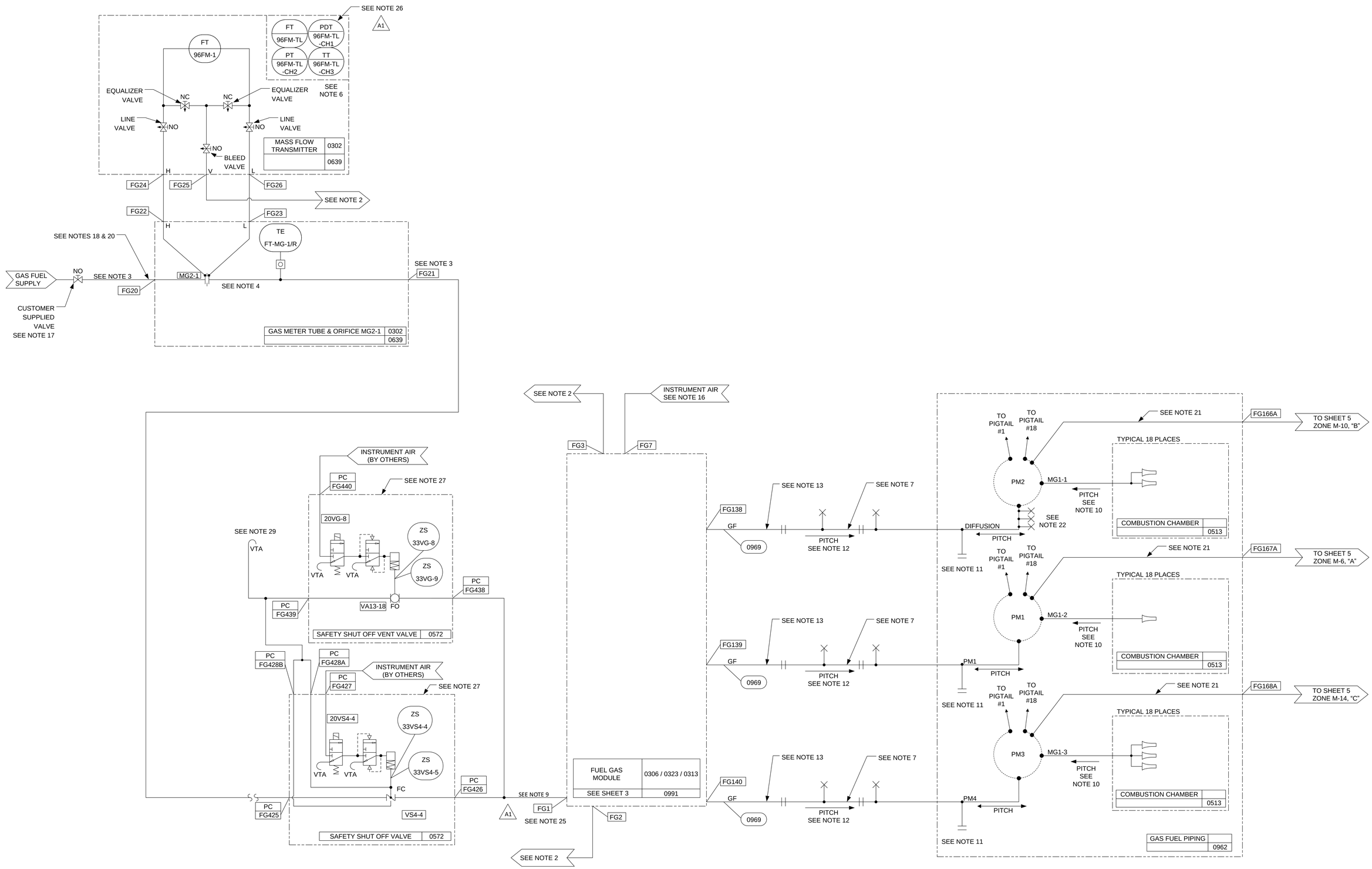

GE CLASS II (INTERNAL NON-CRITICAL) /NOT EXPORT CONTROLLED

CREATED BY	APPROVED BY	DOCUMENT TYPE	REVISION
BASHA	BEIER,BERNARD	SCHEMATIC	A

GE POWER

TITLE: DIAG. SCH. PP-FUEL GAS

CREATION DATE (YYYY-MM-DD)	SHEET SIZE	DRAWING NO.	SHEET
2021-07-19	E	140T0386	2 OF 5

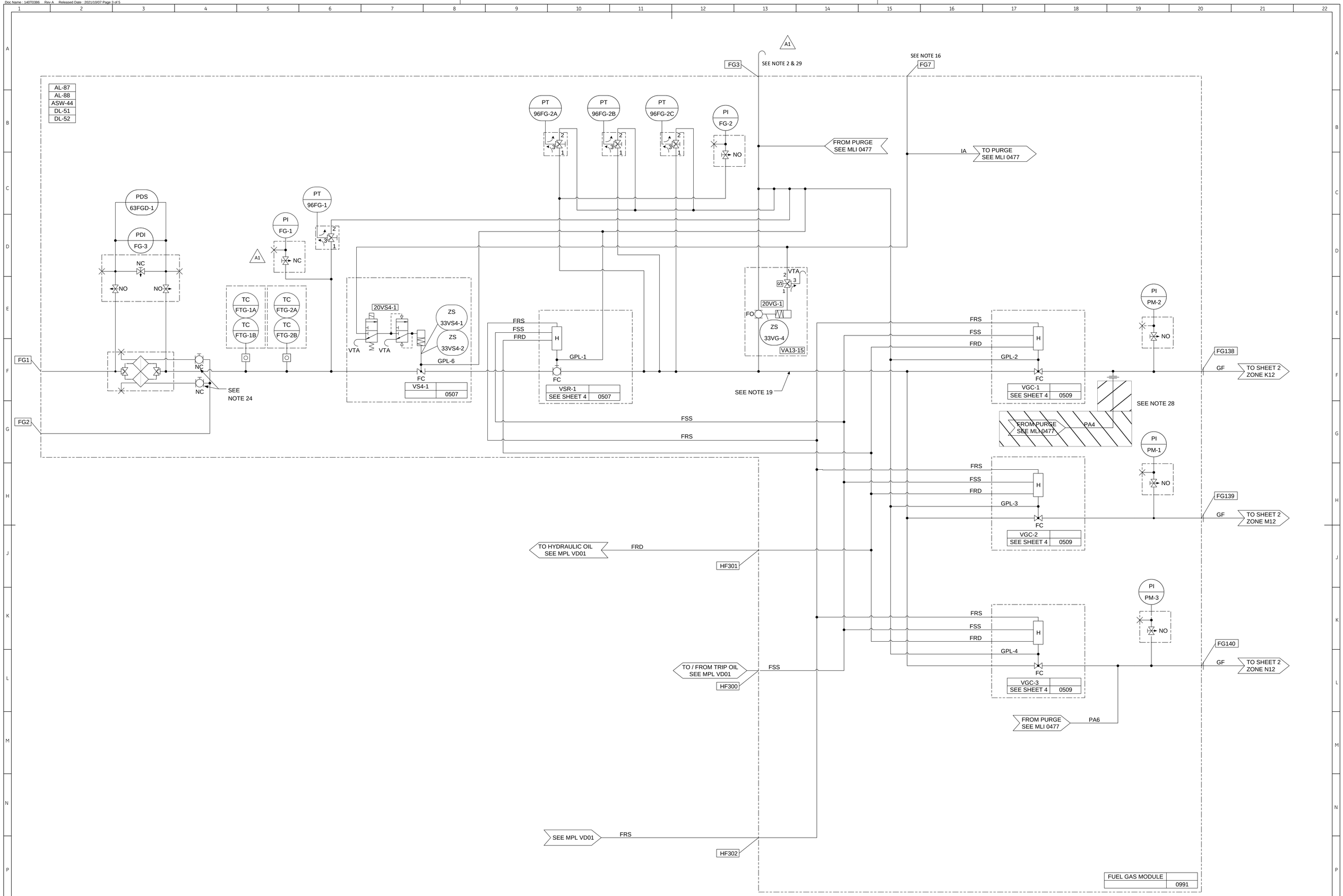

GE CLASS II (INTERNAL NON-CRITICAL) /NOT EXPORT CONTROLLED

CREATED BY	APPROVED BY	DOCUMENT TYPE	REVISION
BASHA	BEIER,BERNARD	SCHEMATIC	A

GE POWER

TITLE: DIAG. SCH. PP-FUEL GAS

CREATION DATE (YYYY-MM-DD)	SHEET SIZE	DRAWING NO.	SHEET
2021-07-19	E	140T0386	3 OF 5

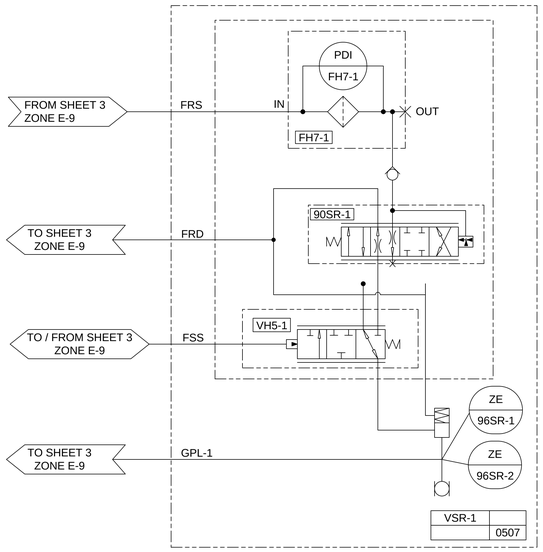

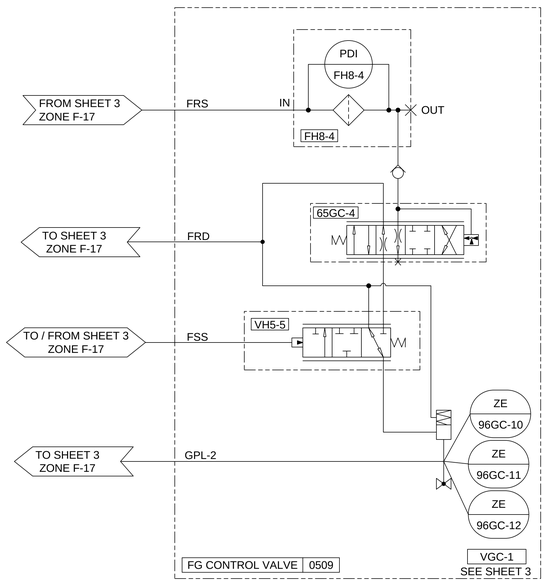

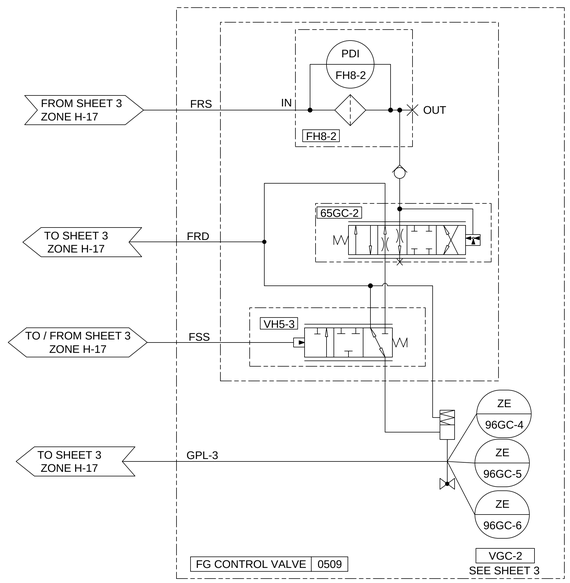

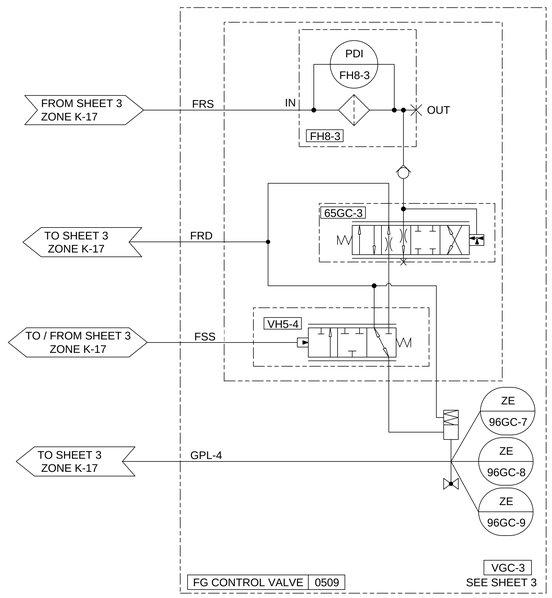

GE CLASS II (INTERNAL NON-CRITICAL) /NOT EXPORT CONTROLLED

CREATED BY	APPROVED BY	DOCUMENT TYPE	REVISION
BASHA	BEIER,BERNARD	SCHEMATIC	A

GE POWER

TITLE: DIAG. SCH. PP-FUEL GAS

CREATION DATE (YYYY-MM-DD)	SHEET SIZE	DRAWING NO.	SHEET
2021-07-19	E	140T0386	4 OF 5

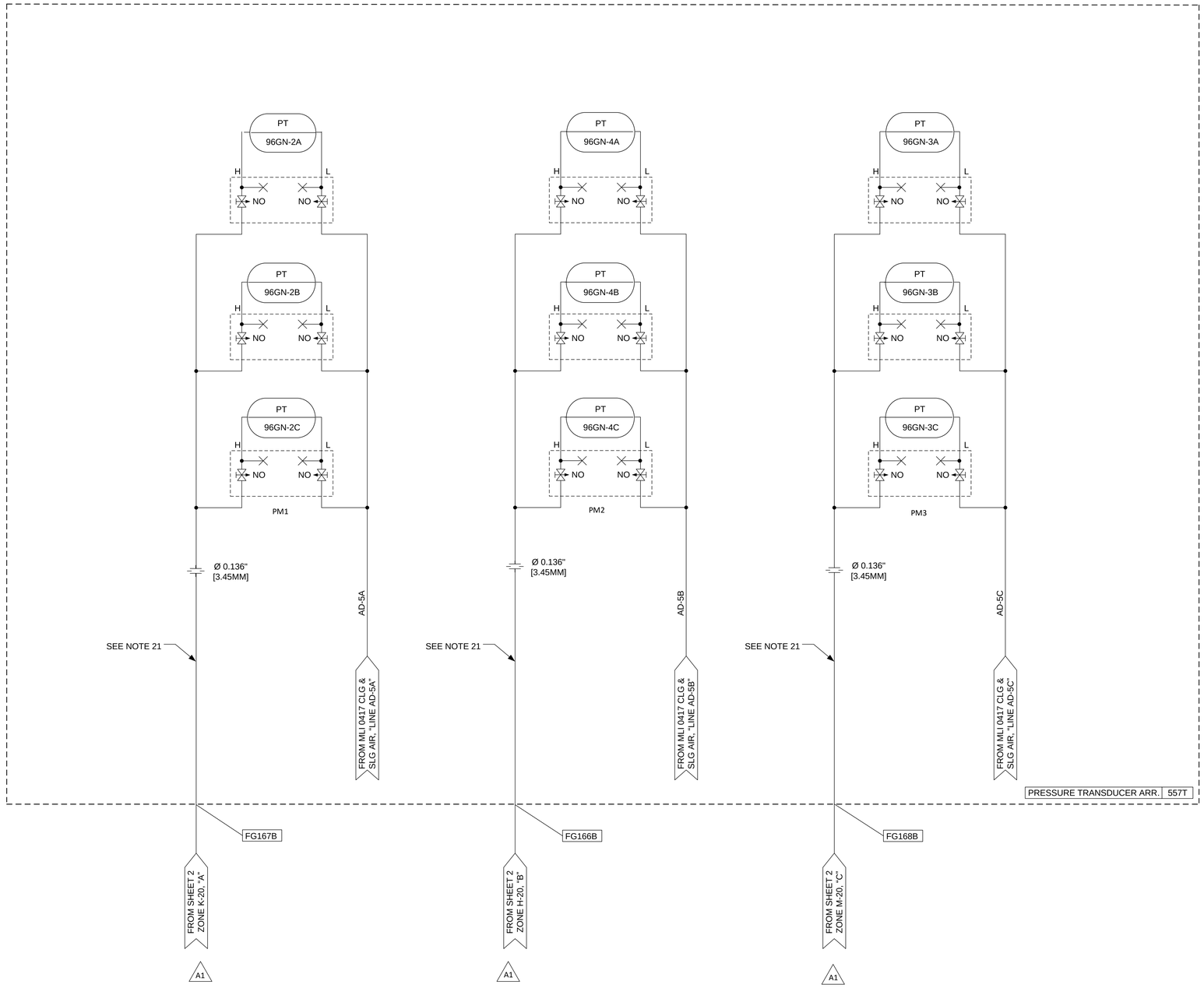

GE CLASS II (INTERNAL NON-CRITICAL) /NOT EXPORT CONTROLLED

CREATED BY	APPROVED BY	DOCUMENT TYPE	REVISION
BASHA	BEIER,BERNARD	SCHEMATIC	A

GE POWER

TITLE: DIAG. SCH. PP-FUEL GAS

CREATION DATE (YYYY-MM-DD)	SHEET SIZE	DRAWING NO.	SHEET
2021-07-19	E	140T0386	5 OF 5

GENERAL NOTES

1. Design pressure: 41.4 Barg (600 psig)
Design temperature of the vessel: −28.9 °C to 260 °C (−20 °F to 500 °F)
Design temperature of the instruments and valves: −28.9 °C to 232.2 °C (−20 °F to 450 °F)

2. FG72 and FG75 are potential Class 1, Div. 1 / Group IIA, Zone 1 sources of Natural Gas. Installer shall route these lines separate from each other and from all other vents to a naturally ventilated area free from sources of ignition and outside of any building enclosures. The terminus of the vents shall be such that the existing flow during venting operation is directed upwards

3. Max differential pressure flange to flange is 0.2 Bar (3 psi)

4. The system is CE stamped. In particular it is CE stamped according to 97/23/EC (PED) and 94/9/EC (ATEX) Directives

5. One scrubber required for each gas turbine

6. End User shall insulate scrubber and to connect the piping

7. End User shall heat trace piping dowstream the scrubber to turbine to maintain 38 °C [100 °F] on system shut down

8. End User shall heat trace level instruments and drain piping to prevent freezing.

9. End User shall provide adequate ventilation to dissipate any vented gas from the vessel automatic drain/level control system

10. End User shall test vessel pressure relief valves prior to initial operation and shall periodically re-test the relief valves for proper operation and setting value.

11. End User shall perform leak test prior to initial operation and shall periodically leak check/test during normal operations.

12. End User shall enforce proper and safe liquid condensate removal and drain procedures from the vessel and drain system

13. End User shall follow the safety instruction included in the operating & maintenance manual NLA9167009S

14. End User shall follow the installation, operating and maintenance instruction included in the operating & maintenance manual NLA9167009S

SCHEDULE OF CONNECTION			
CONNECTION	SIZE	SERIES	DESCRIPTION
FG−70	12"	300# RF (A)	INLET
FG−71	12"	600# RF SS	OUTLET
FG−72	1"	300# RF	VENT
FG−73	1"	300# RF (A)	DRAIN
FG−74	1"	300# RF	AUTO DRAIN
FG−75	1"	300# RF	RELIEF VALVE
FG−183	1"	150# RF SS	INSTRUMENT AIR

DEVICE SUMMARY		
ISA	IEEE	SETTINGS
PSV−1	VR14	THERMAL RELIEF VALVE, 37.9 BARG (550 PSIG) ±3%
LSH−1	71GS−1	NC, 125 VDC, OPEN TO ALARM MARK VI
LSHH−1	71GS−2A	NC, 125 VDC, OPEN TO TRIP MARK VI
LSHH−2	71GS−2B	NC, 125 VDC, OPEN TO TRIP MARK VI
LC	LG−GS	LEVEL CONTROLLER, AIR SUPPLY PRESSURE 5.5 BARG (80 PSIG)
FC	VA85−1	AUTOMATIC DRAIN VALVE
IPR	VPR02−11	INSTRUMENT AIR SUPPLY PRESSURE REGULATOR (SET AT 5.5 BARG)

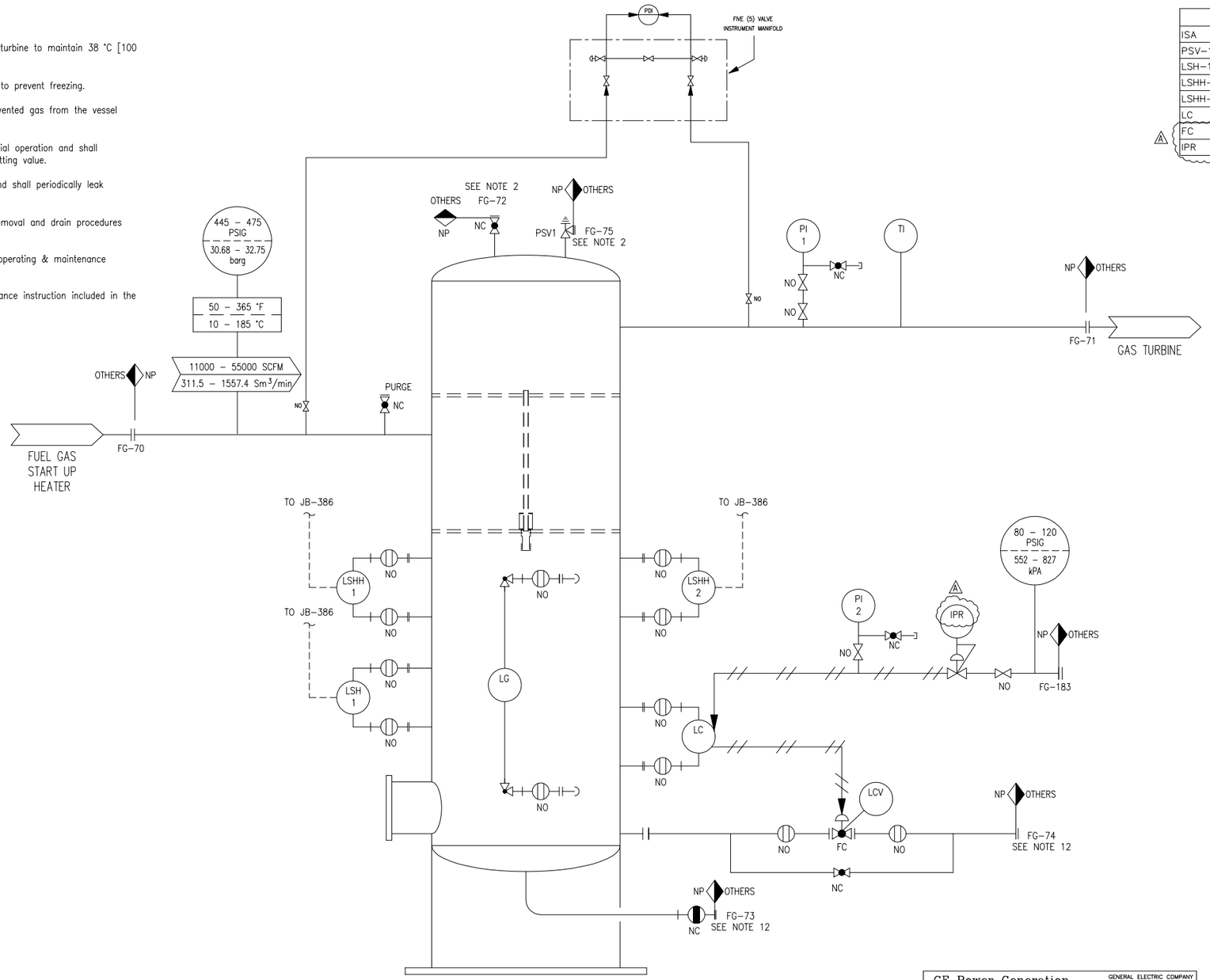

Rev.	Date	Description	Prep'd	Check'd	Appr'd
1	06/Oct/04	Revised where shown (A)	ESP	G.Napolitano	G.Napolitano
0	20/May/04	ISSUED	ESP	G.Napolitano	G.Napolitano

MADE BY: Nuovo Pignone PVS BARI

CLIENT: GENERAL ELECTRIC
POWER PLANT ENGINEERING
POWER PLANT SYSTEMS DEPARTMENT

MADE FOR: METKA - Metal Construction of Greece S.A.

PROJECT: LAVRION V CCPP

TITLE: G002 Fuel Gas Scrubber P & ID

NP Job: 8109167
Contract Nr.: 180724235
GT DM #: GR0942
Location: Port of Lavrion, GREECE

Nuovo Pignone Drawing n°: NLA9167001D

Rev. 1 | Scale: − | Sheet: 1/1

GE Power Generation — GENERAL ELECTRIC COMPANY Schenectady, NY
DT− VENDOR SUPPLIED DRAWING
GE NOT TO REVISE. GE REVISION LEVEL IS AS SHOWN ON THIS APPLIQUE. THIS DOCUMENT IS FILED UNDER THE GE DRAWING NUMBER
THIS DOCUMENT SHALL BE REVISED IN ITS ENTIRETY. ALL SHEETS OF THIS DOCUMENT ARE THE SAME REVISION LEVEL AS INDICATED IN THIS VENDOR SUPPLIED DRAWING APPLIQUE.
FIRST MADE FOR: SHEET 1 of 1
GE SIGNATURES | DATE | GE DRAWING NUMBER 211D7958 | REV. A
CHECKED:
ISSUED:

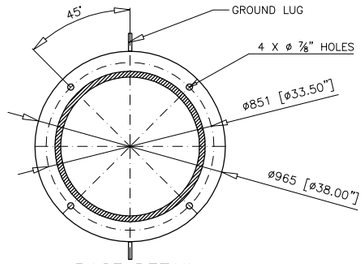

BASE DETAIL

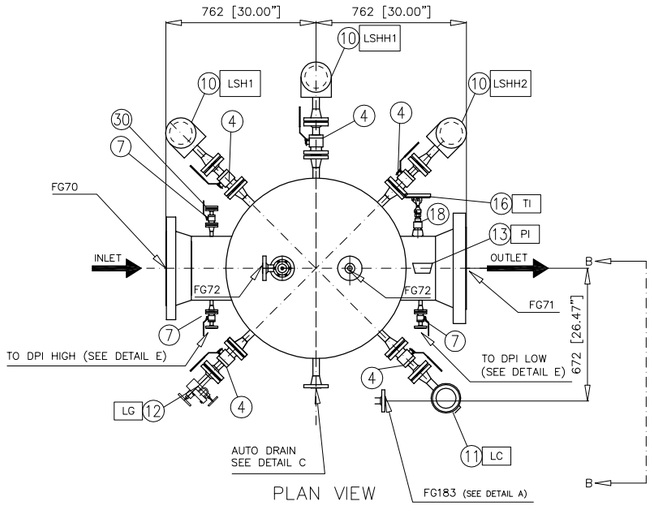

PLAN VIEW

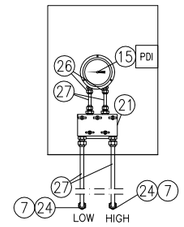

DETAIL E
DPI ASSEMBLY

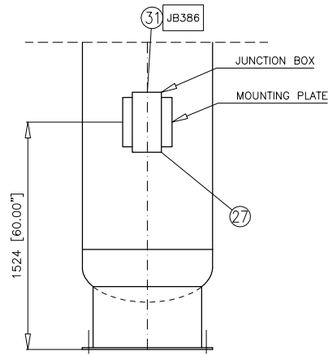

DETAIL D
JUNCTION BOX ASSEBLY
VIEW B–B

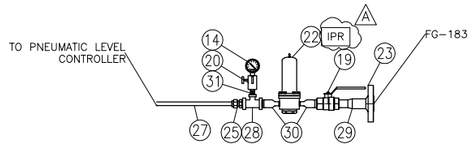

DETAIL A
INSTRUMENT AIR SUPPLY

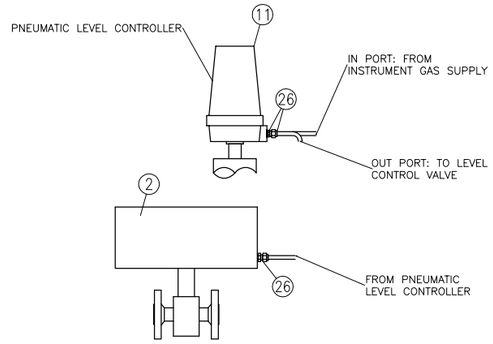

DETAIL B
LEVEL CONTROLLER TO LEVEL CONTROL VALVE CONNECTION

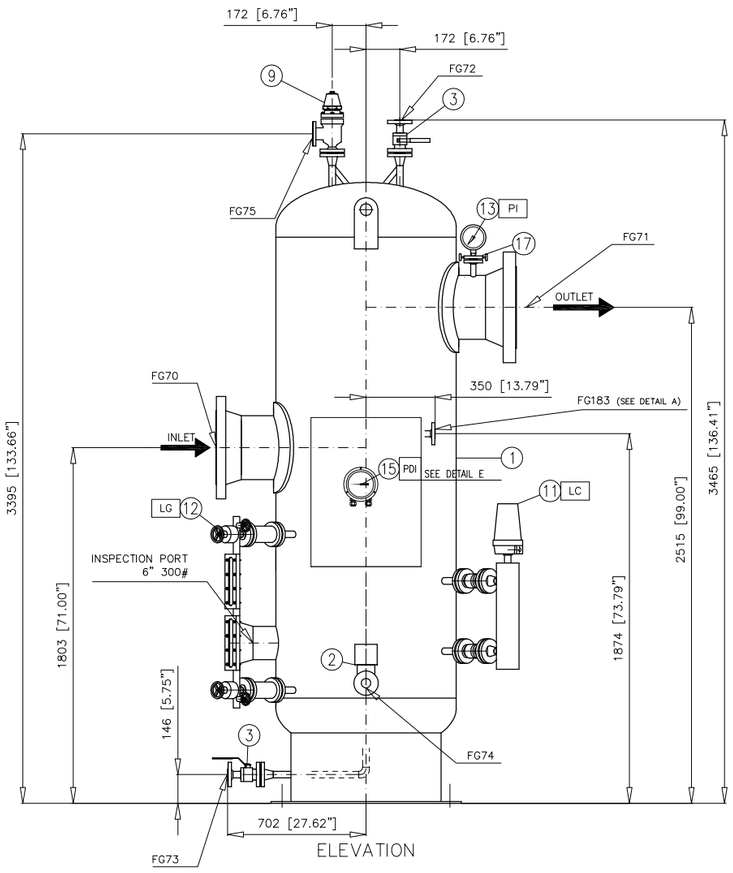

ELEVATION

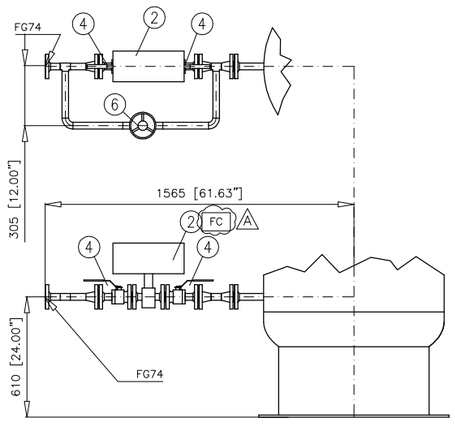

DETAIL C
VIEW B–B
AUTO DRAIN VALVE
ELEVATION & PLAN

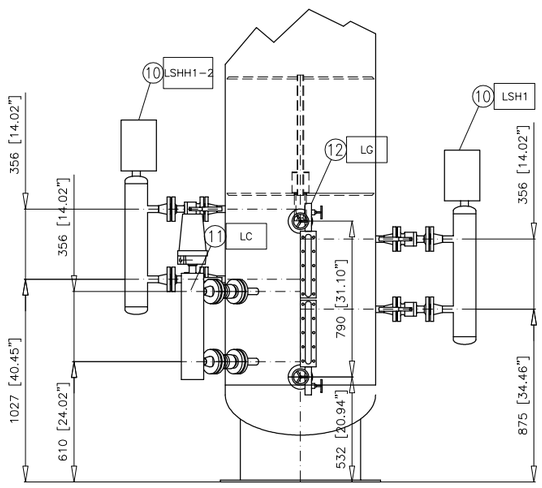

LEVEL INSTRUMENT POSITION

DEVICE SUMMARY		
ISA	IEEE	SETTINGS
PSV–1	VR14	THERMAL RELIEF VALVE, 37.9 BARG ±3%
LSH–1	71GS–1	NC, 125 VDC, OPEN TO ALARM MARK VI
LSHH–1	71GS–2A	NC, 125 VDC, OPEN TO TRIP MARK VI
LSHH–2	71GS–2B	NC, 125 VDC, OPEN TO TRIP MARK VI
FC	VA85–1	AUTOMATIC DRAIN VALVE
IPR	VPR02–11	INSTRUMENT AIR SUPPLY PRESSURE REGULATOR (SET AT 5.5 BARG) A

PROCESS AND DESIGN DATA	
FLOW RATE	311.5 – 1557.4 Sm3/min (11000 – 55000 SCFM)
OPERATIVE PRESSURE	30.68 – 32.75 barg [445 – 475 psig]
OPERATIVE TEMPERATURE	10 – 185 °C [50 – 365 °F]
MAX DIFFERENTIAL PRESSURE ACROSS SCRUBBER	0.21 bar [3 psi] AT MAX FLOW
DESIGN PRESSURE	41.4 barg [600 psig]
VESSEL DESIGN TEMPERATURE	–28.9 – 260 °C [–20 – 500 °F]
INSTRUMENT & VALVE DESIGN TEMPERATURE	–28.9 – 232 °C [–20 – 450 °F]
DESIGN CODE	ASME VIII DIV.1

SCHEDULE OF CONNECTION			
CONNECTION	SIZE	SERIES	DESCRIPTION
FG–70	12"	300# RF	INLET
FG–71	12"	600# RF SS	OUTLET
FG–72	1"	300# RF	VENT
FG–73	1"	300# RF	DRAIN
FG–74	1"	300# RF	AUTO DRAIN
FG–75	1"	300# RF	RELIEF VALVE
FG–183	1"	150# RF SS	INSTRUMENT AIR

GE Power Generation — GENERAL ELECTRIC COMPANY Schenectady, NY

DT– VENDOR SUPPLIED DRAWING

GE NOT TO REVISE. GE REVISION LEVEL IS AS SHOWN ON THIS APPLIQUE. THIS DOCUMENT IS FILED UNDER THE GE DRAWING NUMBER

THIS DOCUMENT SHALL BE REVISED IN ITS ENTIRETY. ALL SHEETS OF THIS DOCUMENT ARE THE SAME REVISION LEVEL AS INDICATED IN THIS VENDOR SUPPLIED DRAWING APPLIQUE.

FIRST MADE FOR: SHEET 1 of 1

GE SIGNATURES	DATE	GE DRAWING NUMBER	REV.
CHECKED:		211D7959	A
ISSUED:			

GENERAL NOTES

1. DIMENSION IN MM. DIMENSION IN BRACKET ARE INCHES

2. THE SYSTEM IS CE STAMPED ACCORDING TO APPLICABLE EU DIRECTIVES. IN PARTICULAR IT IS CE STAMPED ACCORDING TO 97/23/EC DIRECTIVE (CATEGORY IV, FLUID GROUP 1) AND 94/9/EC DIRECTIVE Ex II 3 G

3. FOR INSTALLATION, OPERATING, MAINTENANCE AND SAFETY INSTRUCTIONS PLEASE REFER TO O&M MANUAL NLA9167009S. THE INSTALLER SHALL PROVIDE ALL FOUNDATION BOLTS LOCATED BY MOUNTING HOLES SHOWN ON THE DRAWING. BOLTS SHALL BE IMBEDDED IN THE FOUNDATION TO RESIST PULL–OUT FORCE EQUAL TO THE BOLT STRENGTH.

4. FG72 AND FG75 ARE POTENTIAL CLASS 1, DIV. 1/GROUP IIA, ZONE 1 SOURCES OF NATURAL GAS. INSTALLER SHALL ROUTE THESE LINES SEPARATE FROM EACH OTHER AND FROM ALL OTHER VENTS TO A NATURALLY VENTILATED AREA FREE FROM SOURCES OF IGNITION AND OUTSIDE OF ANY BUILDINGS OR ENCLOSURE. THE TERMINUS OF THE VENTS SHALL BE SUCH THAT THE EXITING FLOW DURING OPERATIONS IS DIRECTED UPWARDS.

5. END USER SHALL PROVIDE ADEQUATE VENTILATION TO DISSIPATE ANY VENTED GAS FROM THE SYSTEM.

6. END USER SHALL PROHIBIT THE USE OF ALL SOURCES OF IGNITION AND OPEN FLAMES WITHIN THE DEFINED HAZARDOUS AREA.

7. END USER SHALL ENSURE THAT THE NATURAL GAS IS MANUALLY VENTED FROM THE SYSTEM AND THAT THE SYSTEM IS PURGED WIYH NITROGEN PRIOR TO INSPECTION/MAINTENANCE OPERATION

8. END USER SHALL TEST PRESSURE SAFETY VALVES PRIOR TO INITIAL OPERATION AND SHALL PERIODICALLY RE–TEST THE PRESSURE SAFETY VALVES FOR PROPER OPERATION AND SETTING VALUE.

9. END USER SHALL INSULATE SCRUBBER, PIPING TO AND FROM SCRUBBER BECAUSE OF HOT SURFACES. END USER SHALL HEAT TRACE PIPING DOWSTREAM OF SCRUBBER TO MAINTAIN 100 °F [38 °C] PIPE TEMPERATURE ON SYSTEM SHUTDOWN. END USER SHALL HEAT TRACE ALL LEVEL SWITCHES/CONTROLLERS AND THE AUTOMATIC DRAIN SYSTEM TO PREVENT FREEZING.

10. END USER SHALL PROVIDE INSTRUMENT WIRING TO THE JUNCTION BOX.

11. TOLERANCE: 5.2 MM [1/16 INCH PER FOOT]

12. WARNING: THE NOISE LEVEL DUE TO DISCHARGE FROM PRESSURE SAFETY VALVE AND VENT VALVE IS ABOUT 129 db. IT HAPPENS ONLY DURING EQUIPMENT MALFUNCTION OR MAINTENANCE OPERATION (VENT VALVE OPENING).

REFERENCE DRAWINGS

P&ID DRAWING NLA9167001D

MATERIAL LIST

POS.	TYPE	SIZE & TYPE	RATING	Q.TY	MATERIAL	EQUIP. CODE
01	SCRUBBER	36"	---	1	CARBON STEEL	NLA020010049
02	ACTUATED BALL VALVE	1" FLANGED	300#	1	CARBON STEEL	NLA050010257
03	BALL VALVE (METAL SEAT)	1" FLANGED	300#	2	CARBON STEEL	NLA050010258
04	BALL VALVE	1" FLANGED	300#	12	CARBON STEEL	NLA050010263
05	–	–	–	–	–	–
06	GLOBE VALVE	1" BW	300#	1	CARBON STEEL	JXC000670804
07	BALL VALVE	1/2" FLANGED	300#	3	CARBON STEEL	NLA050010264
08	–	–	–	–	–	–
09	PRESSURE SAFETY VALVE	3/4"x1"	300#	1	CARBON STEEL	NLA050030113
10	ELECTRIC LEVEL SWITCH	1" FLANGED	300#	3	SEE DATA SHEET	NLA040010191
11	PNEUMATIC LEVEL CONTR.	1" FLANGED	300#	1	SEE DATA SHEET	NLA040010175
12	LEVEL GAUGE	1" FLANGED	300#	1	SEE DATA SHEET	RJQ229640100
13	PRESSURE INDICATOR	ø4.5" x 1/2" NPTM	---	1	SEE DATA SHEET	NLA040020107
14	PRESSURE INDICATOR	ø3" x 1/4" NPTM	---	1	SEE DATA SHEET	NFC394018230
15	DIFF. PRESSURE INDICATOR	ø4" x 1/4" NPTM	---	1	SEE DATA SHEET	NLA040020108
16	TEMPERATURE INDICATOR	ø5" x 3/4" NPTM	---	1	SEE DATA SHEET	NLA040020106
17	PRESSURE INDICATOR VALVE	1/2" FLANGED	600#	1	S.S. 316	NLA070010008
18	TEMPERATURE WELL	1"SWx3/4"NPTF	3000#	1	S.S. 316	NLA070030023
19	BALL VALVE	1/2" THD	800#	1	STAINLESS STEEL	JXC080480020
20	TWO VALVE MANIFOLD	1/4"NPT	3000#	1	S.S. 316	RV0560176000
21	FIVE VALVE MANIFOLD	1/2" Tubing	3000#	1	S.S. 316	NLA070010004
22	PRESSURE REGULATOR	1/4"NPTF	---	1	SEE DATA SHEET	NIC342301602
23	FLANGE	1" RF BW	150#	1	S.S. 316	–
24	FLANGED MALE CONNECTOR	1/2" RF x1/2"TUB	600#	2	S.S. 316	NLA070010006
25	MALE CONNECTOR	1/2"NPTMx1/2"TUB.	3000#	1	S.S. 316	–
26	MALE CONNECTOR	1/4"NPTMx1/2"TUB.	3000#	5	S.S. 316	–
27	TUBING	1/2"x0.065" THK.	---	4 m	S.S. 316	–
28	REDUCING TEE	1/2" X 1/4" NPT	3000#	1	S.S. 316	---
29	REDUCING NIPPLE	1"BWx1/2" NPTM	3000#	1	S.S. 316	---
30	REDUCING NIPPLE	1/2"x1/4" NPTM	3000#	1	S.S. 316	---
31	NIPPLE	1/4" NPT	3000#	1	S.S. 316	
30	FLANGE	1" RF BLIND	300#	1	CARBON STEEL	---
31	JUNCTION BOX	NEMA 4	--	1	CARBON STEEL	NLA090030060

DRAIN AND VENT PIPING CONSIST OF 1" PIPES (A106 Gr B, SCHEDULE 80), BUTT WELDING FITTINGS (CARBON STEEL), SPIRAL WOUND GASKETS (SS 304 + GRAPHITE, OUTER RING CS GALV., INNER RING SS), BOLTS (A193B7 GALVANIZED), NUTS (A1942H GALVANIZED) AND WASHERS (GALVANIZED CARBON STEEL)

Rev.	Date	Description	Prep'd	Check'd	Appr'd
1	06/Oct/2004	Revised where shown A	ESP	G.Napolitano	G.Napolitano
0	15/Jul/2004	ISSUED	ESP	G.Napolitano	G.Napolitano

MADE BY: Nuovo Pignone PVS BARI

CLIENT: GENERAL ELECTRIC
POWER PLANT ENGINEERING
POWER PLANT SYSTEMS DEPARTMENT

MADE FOR: METKA - Metal Construction of Greece S.A.

PROJECT: LAVRION V CCPP

TITLE: Fuel Gas Scrubber General Arrangement

NP Job: 8109167
Contract Nr.: 180724235
GT DM #: GR0942
Location: Port of Lavrion GREECE

Document Number: NLA9167002D
Rev. 1 | Scale: - | Sheet: 1/1

GENERAL NOTES

1. Gas side design pressure: 41.4 barg (600 psig)
   Water side design pressure: 75.8 barg (1100 psig)
   Max pressure drop across skid on Gas side: 1.03 bar (15 psi)

2. Gas side design temperature: −28.9 °C to 232.2 °C (−20 °F to 450 °F)
   A Water side design temperature: −28.9 °C to 273.9 °C (−20 °F to 525 °F)
   Max pressure drop across skid on Water side: 38.3 bar (556 psi)

3. The skid is CE stamped according to applicable EU Directives. In particular it is CE stamped according to 97/23/EC Directive (Category IV)and 94/9/EC Directive Ex II 3 G

4. Orifice sized to allow no greater than 3.8 litres/min (1 GPM) bypass flow during normal operation

5. This pipe to be mounted with a physical elevation difference between valve FV4205 and point (A). Slope as shown.

6. Vent lines to atmospheric drain tank to be sloped as shown.

7. Instruments are wired to skid mounted junction boxes (see NLA9166004D).

8. End User shall supply instrument air clean and dry. The minimum flow shown is continuous

9. SAFETY NOTES:

A) Follow O&M Manual NLA9166010S

B) Vent to safe area. FG186, 187, 193 are potential Class 1, Div 1 / Group IIA, Zone 1 sources of Natural Gas. Installer shall route these lines separate from each others and from all other vents to a naturally ventilated area free from sources of ignition and outside of any building enclosures. The terminus of the vents shall be such that the existing flow during venting operations is directed upwards. Vent from feedwater system may contain gas and hence should be considered as hazardous

C) End User shall provide adequate ventilation to dissipate any vented gas from vessels, piping, valves

D) End User shall test the pressure safety valves prior to initial operation and shall periodically re−test for proper operation.

E) End User shall perform a leak test prior to initial operation and shall periodically leak check/test the system

F) End User shall ensure that the Equipment to be inspected/maintained shall be vented and purged with nitrogen prior to inspection/maintenance

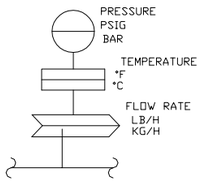

LEGEND

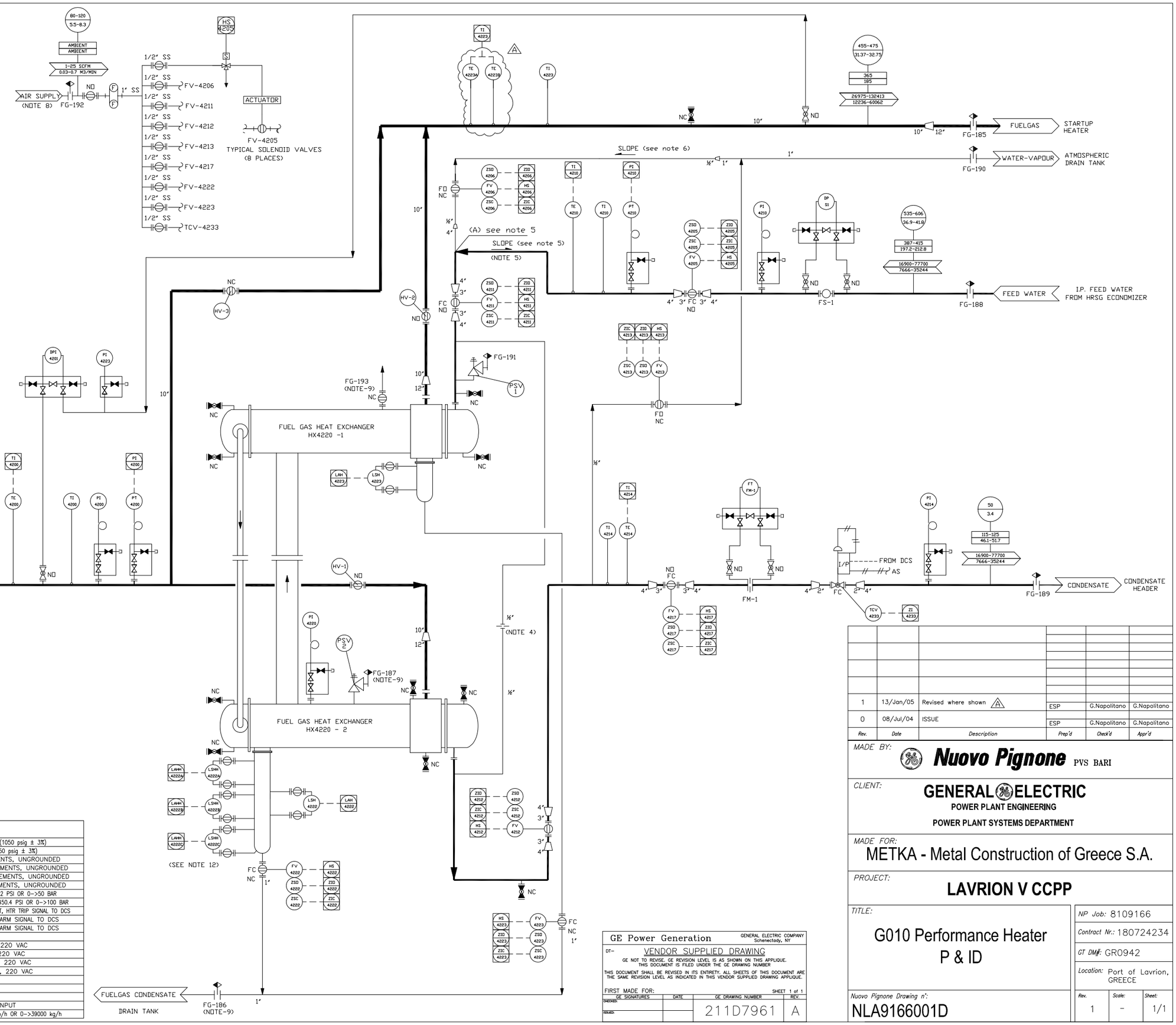

SCHEDULE OF CONNECTIONS

CONNECTION	DESCRIPTION	SIZE	SERIES
FG−184	GAS INLET	12"	300# RF
FG−185	GAS OUTLET	12"	300# RF
FG−186	DRAIN	1"	300# RF
FG−187	GAS RELIEF	2"	150# RF
FG−188	WATER INLET	4"	600# RF
FG−189	WATER OUTLET	4"	600# RF
FG−190	WATER VENT	1"	600# RF
FG−191	WATER RELIEF	1"	600# RF
FG−192	INSTRUMENT AIR	1"	150# RF SS
FG−193	GAS VENT	1"	300# RF

DEVICE SUMMARY

DEVICE NOMENCLATURE		DESCRIPTION/SETTINGS
ISA	IEEE	
PSV−1	VR−HW	HTR WATER PRESSURE RELIEF VALVE, SET 72.4 Barg ± 3% (1050 psig ± 3%)
PSV−2	VR−PHG	HTR GAS PRESSURE RELIEF VALVE, SET 37.9 Barg ± 3% (550 psig ± 3%)
TE−4200	PT−GI	HTR GAS INLET THERMOCOUPLE,K TYPE, 2ELEMENTS, UNGROUNDED
TE−4210	PTWI	HTR WATER INLET THERMOCOUPLE,K TYPE, 2ELEMENTS, UNGROUNDED
TE−4214	PT−WO	HTR WATER OUTLET THERMOCOUPLE,K TYPE, 2ELEMENTS, UNGROUNDED
TE−4223A, B, C	PT−GOA, B, C	HTR GAS OUTLET THERMOCOUPLE,K TYPE, 2ELEMENTS, UNGROUNDED
PT−4200	96PH−1G	HTR INLET GAS PRESSURE TRANSMITTER, 4−>20MA, 0−>725.2 PSI OR 0−>50 BAR
PT−4210	96PH−1W	HTR INLET WATER PRESSURE TRANSMITTER, 4−>20MA, 0−>1450.4 PSI OR 0−>100 BAR
LSHH−4222A,B,C	71PH−T1,T2,T3	HTR HIGH−HIGH WATER LEVEL SWITCH, 125VDC 0.5 AMP,DPDT, HTR TRIP SIGNAL TO DCS
LSH−4222	71PH−A1	HTR HIGH WATER LEVEL, 125 VDC 0.5 AMP,DPDT, ALARM SIGNAL TO DCS
LSH−4223	71PH−A2	HTR HIGH WATER LEVEL, 125 VDC 0.5 AMP,DPDT, ALARM SIGNAL TO DCS
FV−4205	20PH−FI1	HTR WATER INLET SOLENOID VALVE, 220 VAC
FV−4206	20PH−VH1	HTR WATER INLET SIDE VENT SOLENOID VALVE, 220 VAC
FV−4211	20PH−FI2	HTR WATER INLET ISOLATION SOLENOID VALVE, 220 VAC
FV−4212	20PH−FD1	HTR WATER OUTLET ISOLATION SOLENOID VALVE, 220 VAC
FV−4213	20PH−VW2	HTR WATER OUTLET SIDE VENT SOLENOID VALVE, 220 VAC
FV−4217	20PH−FO2	HTR WATER OUTLET SOLENOID VALVE, 220 VAC
FV−4222	20PH−D1	HTR DRAIN SOLENOID VALVE, 220 VAC
FV−4223	20PH−D2	HTR DRAIN SOLENOID VALVE, 220 VAC
TCV−4233	VTR−PH	HTR TEMPERATURE CONTROL VALVE, 4−20 MA INPUT
FT−FM1	96FH−W1	HTR IP WATER FLOW TRANSMITTER 4−>20MA, 0−>85980.3 lb/h OR 0−>39000 kg/h

Rev.	Date	Description	Prep'd	Check'd	Appr'd
1	13/Jan/05	Revised where shown A	ESP	G.Napolitano	G.Napolitano
0	08/Jul/04	ISSUE	ESP	G.Napolitano	G.Napolitano

GE Power Generation — GENERAL ELECTRIC COMPANY, Schenectady, NY

DT− VENDOR SUPPLIED DRAWING

GE NOT TO REVISE. GE REVISION LEVEL IS AS SHOWN ON THIS APPLIQUE. THIS DOCUMENT IS FILED UNDER THE GE DRAWING NUMBER

THIS DOCUMENT SHALL BE REVISED IN ITS ENTIRETY. ALL SHEETS OF THIS DOCUMENT ARE THE SAME REVISION LEVEL AS INDICATED IN THIS VENDOR SUPPLIED DRAWING APPLIQUE.

FIRST MADE FOR: SHEET 1 of 1

GE SIGNATURES	DATE	GE DRAWING NUMBER	REV.
CHECKED:		211D7961	A
ISSUED:			

MADE BY: Nuovo Pignone PVS BARI

CLIENT: GENERAL ELECTRIC
POWER PLANT ENGINEERING
POWER PLANT SYSTEMS DEPARTMENT

MADE FOR: METKA - Metal Construction of Greece S.A.

PROJECT: LAVRION V CCPP

TITLE: G010 Performance Heater P & ID

NP Job: 8109166
Contract Nr.: 180724234
GT DM#: GR0942
Location: Port of Lavrion, GREECE

Nuovo Pignone Drawing n°: NLA9166001D

Rev.	Scale:	Sheet:
1	-	1/1

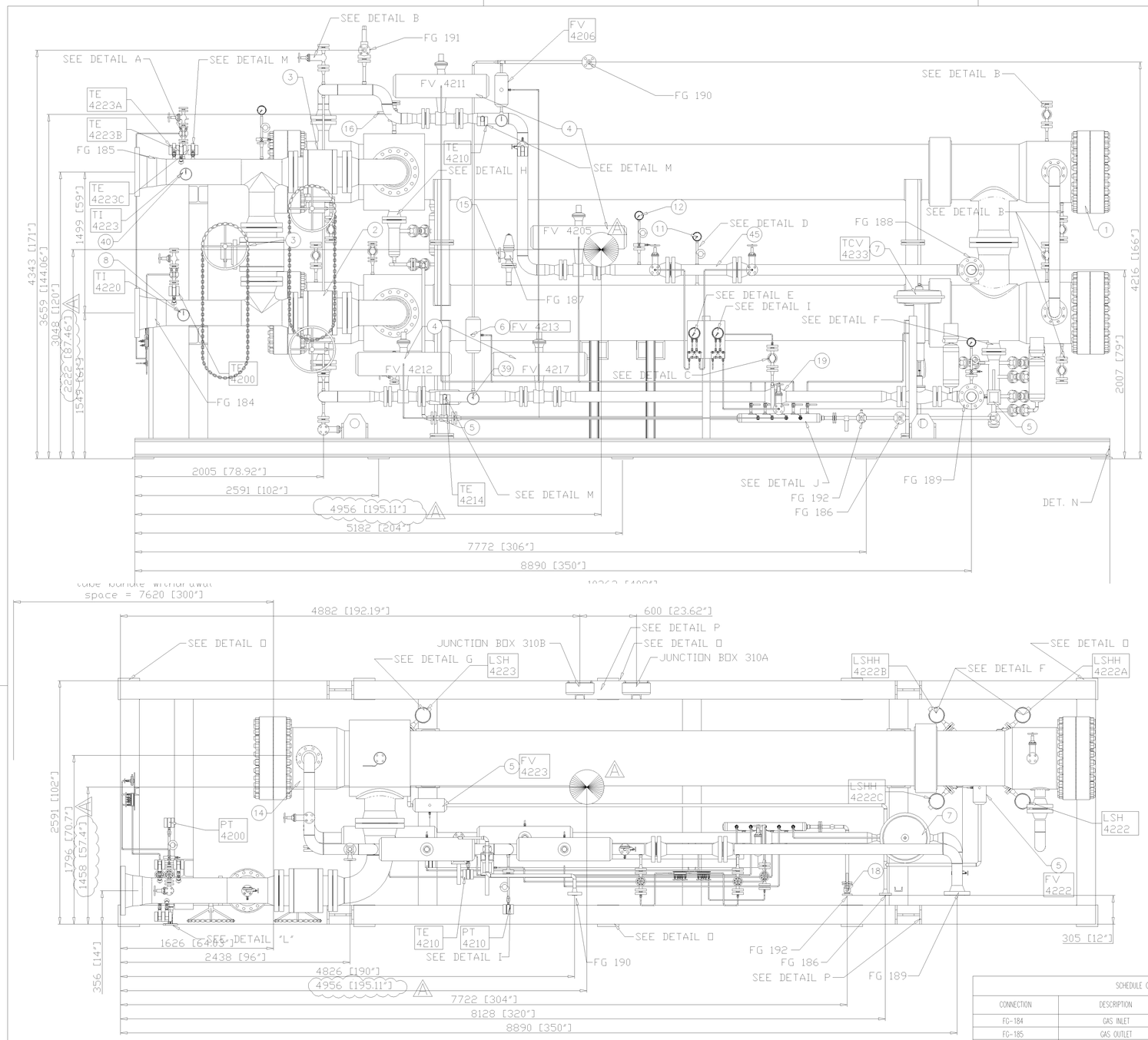

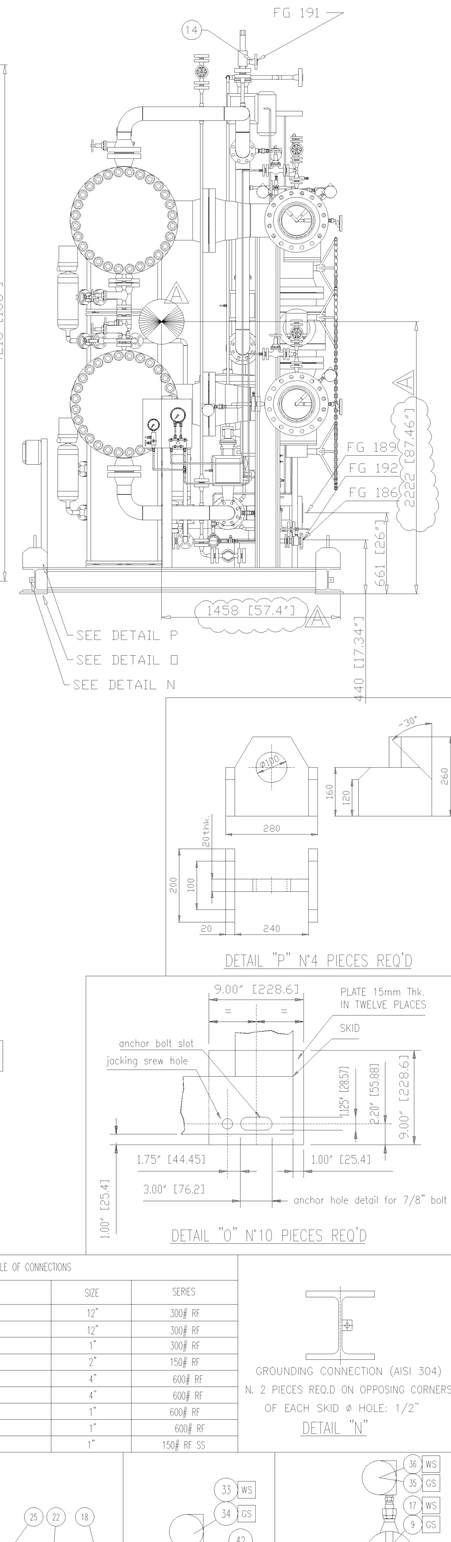

DETAIL "P" N°4 PIECES REQ'D

DETAIL "O" N°10 PIECES REQ'D

SCHEDULE OF CONNECTIONS			
CONNECTION	DESCRIPTION	SIZE	SERIES
FG-184	GAS INLET	12"	300# RF
FG-185	GAS OUTLET	12"	300# RF
FG-186	DRAIN	1"	300# RF
FG-187	GAS RELIEF	2"	150# RF
FG-188	WATER INLET	4"	600# RF
FG-189	WATER OUTLET	4"	600# RF
FG-190	WATER VENT	1"	600# RF
FG-191	WATER RELIEF	1"	600# RF
FG-192	INSTRUMENT AIR	1"	150# RF SS

GROUNDING CONNECTION (AISI 304)
N. 2 PIECES REQ.D ON OPPOSING CORNERS
OF EACH SKID Ø HOLE: 1/2"

DETAIL "N"

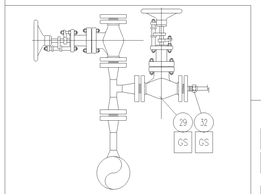

DETAIL "A"
TAPPING POINTS (2 POSITIONS)

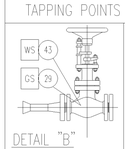

DETAIL "B"
PURGE & VENT VALVES (10 POS.)

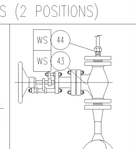

DETAIL "C"
TAPPINGS (4 POS.)

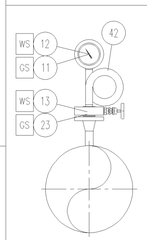

DETAIL "D"
PRESSURE GAUGE ASS. (4 POSITIONS)

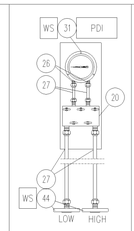

DETAIL "E"
PDI (1 POSITION)

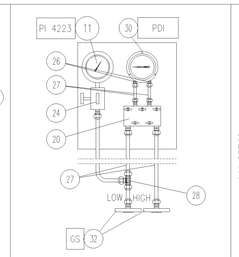

DETAIL "F"
PDI ASSEMBLY (1 POSITION)

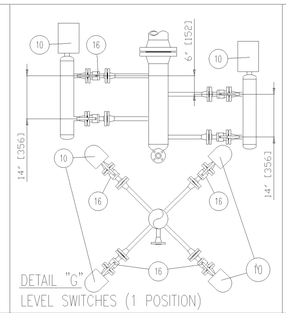

DETAIL "G"
LEVEL SWITCHES (1 POSITION)

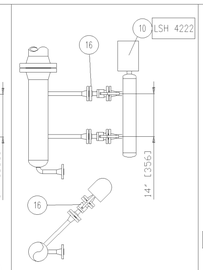

DETAIL "H"
LEVEL SWITCH (1 POSITION)

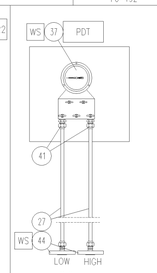

DETAIL "I"
PDI (1 POSITION)

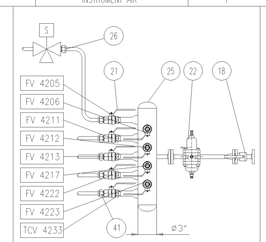

DETAIL "J"
AIR MANIFOLD. (1 POSITION)

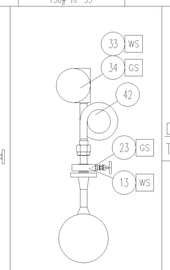

DETAIL "K"
PRESS TRANS. (2 POS.)

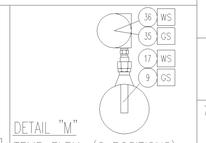

DETAIL "M"
TEMP ELEM. (6 POSITIONS)

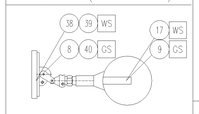

DETAIL "L"
TEMP IND. (4 POSITIONS)

BILL OF MATERIAL					
Pos.	ITEM	SIZE	RATING	MATERIAL	QTY	CODE
45	STRAINER	4" #600	#600	STAINLESS STEEL	1	NLA020010046
44	FLANGED TUBING CONNECTION	#600/½" TUBING	#600	STAINLESS STEEL	4	NLA070010007
43	GLOBE VALVES	ø½" FLG'D RF	#600	CARBON STEEL	12	JXA140420974
42	SIPHON	½" NPT	6000#	STAINLESS STEEL	6	RRR65020
41	MALE CONNECTOR	½"NPTM×½"TUB.	3000#	STAINLESS STEEL	15	RCR46028
40	TEMP. INDICATOR(GS OUT)	5" DIAL, 0÷260°C	L=215	Stainless Steel	1	NLA040020106
39	TEMP. INDICATOR(WS OUT)	5" DIAL, 0÷260°C	L=130	Stainless Steel	1	NLA040020104
38	TEMP. INDICATOR(WS IN)	5" DIAL, 10÷400°C	L=130	Stainless Steel	1	NLA040020103
37	DIFF. PRESS. TRANS (WS)	0– 250 mBar +0 – 750	+kg/min	STAINLESS STEEL	1	–
36	THERMOCOUPLE K TYPE (WS)	L THERMOWELL=130mm	–	WELL=NLA070030022	2	NLA040010172
35	THERMOCOUPLE K TYPE (GS)	L THERMOWELL=220mm	–	WELL=NLA070030023	2	NLA040010171
34	PRESSURE TRANSMITTER (GS)	2.77 – 55.15 BARG	–	–	1	RTO766521010
33	PRESSURE TRANSMITTER (WS)	13.8 – 275.8 BARG	–	–	1	RTO766531010
32	FLANGED TUBING CONNECTION	#300/" TUBING	#300	STAINLESS STEEL	2	NLA070010006
31	DIFF. PRESS. GAUGE (WS)	5" DIAL – 0–3.5 bar	–	STAINLESS STEEL	1	NLA040020102
30	DIFF. PRESS. GAUGE (GS)	5" DIAL – 0–3.5 bar	–	STAINLESS STEEL	1	NLA040020102
29	GLOBE VALVES	ø½" FLG'D RF	#300	CARBON STEEL	6	JXC010420104
28	TEE FOR TUBING	½" TUB.	3000#	STAINLESS STEEL	1	RCR46002
27	TUBING	½" 1,24mm THK.	0.049" THK.	STAINLESS STEEL	70m	CKU01218
26	MALE CONNECTOR	¼"NPTM×½"TUB.	3000#	STAINLESS STEEL	9	RCR46026
25	MANIFOLD	ø3"#150 × ½"NPTM×9	#150	STAINLESS STEEL	1	–
24	TWO VALVE MANIFOLD	½" Tubing	6000#	STAINLESS STEEL	1	NLA070010005
23	MONOFLANGE MANIFOLD (GS)	½"RF R1×½"NPTF	#300 DB&B	STAINLESS STEEL	6	NLA070010008
22	AIR FILTER	1" NPT IN&OUT	1" NPT	ALUMINIUM	1	NLA050020096
21	BALL VALVE	½" NPT THD	#800	STAINLESS STEEL	9	JXG080480020
20	FIVE VALVE MANIFOLD	½" Tubing	6000#	STAINLESS STEEL	2	NLA070010004
19	ORIFICE FLOW METER	4" #600	#600	STAINLESS STEEL	1	NLA010010076
18	BALL VALVE	1" FLG'D RF R1	#150	STAINLESS STEEL	1	JXG020620920
17	TEMP. WELL (for 3" pipe)	1" SW, L = 135 MM	–	Stainless Steel	2	NLA070030022
16	BALL VALVE	1" FLANGED RF R1	#300	Carbon Steel	11	NLA050010230
15	PRESSURE SAFETY VALVE GS	ø1½" × ø2" FLG'D RF/R1	#600×#300	Carbon Steel PED	1	NLA050030132
14	PRESSURE SAFETY VALVE WS	ø1" × ø1"FLG'D RF/R1	#600×#300	Carbon Steel	1	NLA050030122
13	MONOFLANGE MANIFOLD (WS)	½"RF R1×½"NPTF	#600 DB&B	STAINLESS STEEL	3	–
12	PRESSURE GAUGE (WS)	4½" DIAL, VAC–105 barg	–	Case P.resin InnerS.S.	2	NLA040020101
11	PRESSURE GAUGE (GS)	4½" DIAL, 0÷70 barg	–	Case P.resin InnerS.S.	2	NLA040020100
10	ELECTRIC LEVEL SWITCH	1" RF 356mm	#300	ChamberC.S.InnerS.S.	5	NLA040010190
9	TEMP. WELL (for 10" pipe)	1" SW, L = 220 MM	–	Stainless Steel	2	NLA070030023
8	TEMP. INDICATOR (GS IN)	5" DIAL, 0÷85°C	L=215	Stainless Steel	1	NLA040020105
7	CONTROL VALVE	ø2" FLG'D RF	#600	Carbon Steel	1	NLA050020097
6	ACTUATED BALL VALVE	ø½" FLG'D RF	#600	Carbon Steel	2	NLA050010256
5	ACTUATED BALL VALVE	ø1" FLG'D RF	#300	Carbon Steel	2	NLA050010255
4	ACTUATED BALL VALVE	ø3" FLG'D RF	#600	Carbon Steel	4	NLA050010254
3	BALL VALVE (chain operated)	ø10" FLG'D RF	#300	Carbon Steel	2	NLA050010253
2	BALL VALVE (gear operated)	ø10" FLG'D RF	#300	Carbon Steel	1	NLA050010252
1	HEAT–EXCHANGER	T.B.D.	#300/#600	Carbon Steel	1	NLA020040008

NOTE:
01) TOLERANCE: 1/16 INCH PER FOOT (5.2 mm/m)
02) FOR JUNCTION BOX ARRANGEMENT AND ELECTRICAL LEVEL SWITCH WIRING SEE NLA9162004D.
03) DIMENSION ARE IN mm [INCHES BETWEEN BRACKETS].
04) THE VENT VALVES AND PRESSURE SAFETY VALVES MUST BE COLLECTED TO A SAFE AREA OUTSIDE THE SKID (SEE P&I DIAGRAM NLA9166001D).
05) SURFACE PREPARATION AND PRIMER:
The surfaces are sand blasted in accordance with Steel Structures Painting Council Specification SSPC–SP 10 (SA 2.5) and painted with one coat of inorganic zinc primer (Amercin Dimetcote 9VOC or equal). Dry film thickness equal to 3.0–4.0 mils (75 mm to 100 mm)
06) FOR SAFE OPERATION REFER TO THE OPERATION AND MAINTENANCE MANUAL NLA91620005
07) FOR OPERATIONAL AND DESIGN CONDITIONS SEE (SEE P&I DIAGRAM NLA9162001D)
08) WHERE INDICATED (WS) INDICATES "WATER SIDE" AND (GS) "INDICATES GAS SIDE".

GE Power Generation — GENERAL ELECTRIC COMPANY, Schenectady, NY

DT– VENDOR SUPPLIED DRAWING

GE NOT TO REVISE. GE REVISION LEVEL IS AS SHOWN ON THIS APPLIQUE. THIS DOCUMENT IS FILED UNDER THE GE DRAWING NUMBER

THIS DOCUMENT SHALL BE REVISED IN ITS ENTIRETY. ALL SHEETS OF THIS DOCUMENT ARE THE SAME REVISION LEVEL AS INDICATED IN THIS VENDOR SUPPLIED DRAWING APPLIQUE.

FIRST MADE FOR: — SHEET 1 of 1

GE SIGNATURES	DATE	GE DRAWING NUMBER	REV.
CHECKED:		211D7962	A
ISSUED:			

Rev.	Date	Description	Prep'd	Check'd	Appr'd
1	06/Oct/04	REVISED WHERE SHOWN (A)	ES P.	G.Napolitano	G.Napolitano
0	09/July/04	ISSUE	ES P.	G.Napolitano	G.Napolitano

MADE BY: Nuovo Pignone PVS BARI

CLIENT: GENERAL ELECTRIC — POWER PLANT ENGINEERING — POWER PLANT SYSTEMS DEPARTMENT

MADE FOR: METKA - Metal Constructions of Greece S.A.

PROJECT: LAVRION V CCPP

TITLE: Fuel Gas Performance Heat Exchanger GENERAL ARRANGEMENT

NP Job: 8109166
Contract Nr.: 180724234
GT DM#: GR0942
Location: Port of Lavrion, GREECE

Nuovo Pignone Drawing n°: NLA9166002D

Rev.	Scale:	Sheet:
1	–	

GENERAL NOTES

1. MAX DIFFERENTIAL PRESSURE FLANGE TO FLANGE FOR FILTER IS 0.34 BAR (5 psi) CLEAN AT RATED FLOW

2. VENT TO SAFE AREA (SEE ALSO NOTE 11.G)

3. DESIGN PRESSURE: 41.4 BARG

4. DESIGN TEMPERATURE: −28.9 °C to 121 °C (−20 °F to 250 °F)

5. THE SKIDS ARE CE STAMPED ACCORDING TO EUROPEAN DIRECTIVES. IN PARTICULAR THEY ARE STAMPED ACCORDING TO 97/23/EC DIRECTIVE (PED) AND 94/9/EC DIRECTIVE (ATEX).

6. TWO (2) FILTERS REQUIRED FOR EACH GAS TURBINE

7. INSTRUMENTS ARE WIRED TO JUNCTION BOX JB−286 SKID MOUNTED. JUNCTION BOX JB−286 TO BE WIRED TO CONTROL PANEL BY OYHERS. WIRING DIAGRAM DRAWING N° NLA9169004D

8. REFERENCE DRAWING: GE DRAWING # 123E6895

9. SAFETY NOTES:
A) FOLLOW O&M MANUAL NLA9169010S

B) END USER SHALL PROVIDE ADEQUATE VENTILATION TO DISSIPATE ANY VENTED GAS FROM VESSELS, PIPING, VALVES

C) END USER SHALL TEST THE PRESSURE SAFETY VALVES PRIOR TO INITIAL OPERATION AND SHALL PERIODICALLY RE−TEST FOR PROPER OPERATION

D) END USER SHALL PERFORM A LEAK TEST PRIOR TO INITIAL OPERATION AND SHALL PERIODICALLY LEAK CHECK/TEST THE SYSTEM

E) END USER SHALL ENFORCE PROPER AND SAFE LIQUID CONDENSATE REMOVAL AND DRAIN PROCEDURES

F) END USER SHALL ENSURE THAT THE EQUIPMENT TO BE INSPECTED/MAINTAINED SHALL BE VENTED AND PURGED WITH NITROGEN PRIOR TO INSPECTION OR MAINTENANCE

G) FG216A/B, 217A/B ARE POTENTIAL CLASS 1, DIV. 1 / GROUP IIA, ZONE 1 SOURCES OF NATURAL GAS. INSTALLER SHALL ROUTE THESE LINES SEPARATE FROM EACH OTHER AND FROM ALL OTHER VENTS, TO A NATURALLY VENTILATED AREA FREE FROM SOURCES OF IGNITION AND OUTSIDE OF ANY BUILDING ENCLOSURE. THE TERMINUS OF THE VENTS SHALL BE SUCH THAT THE EXITING FLOW DURING VENTING OPERATION IS DIRECTED UPWARDS

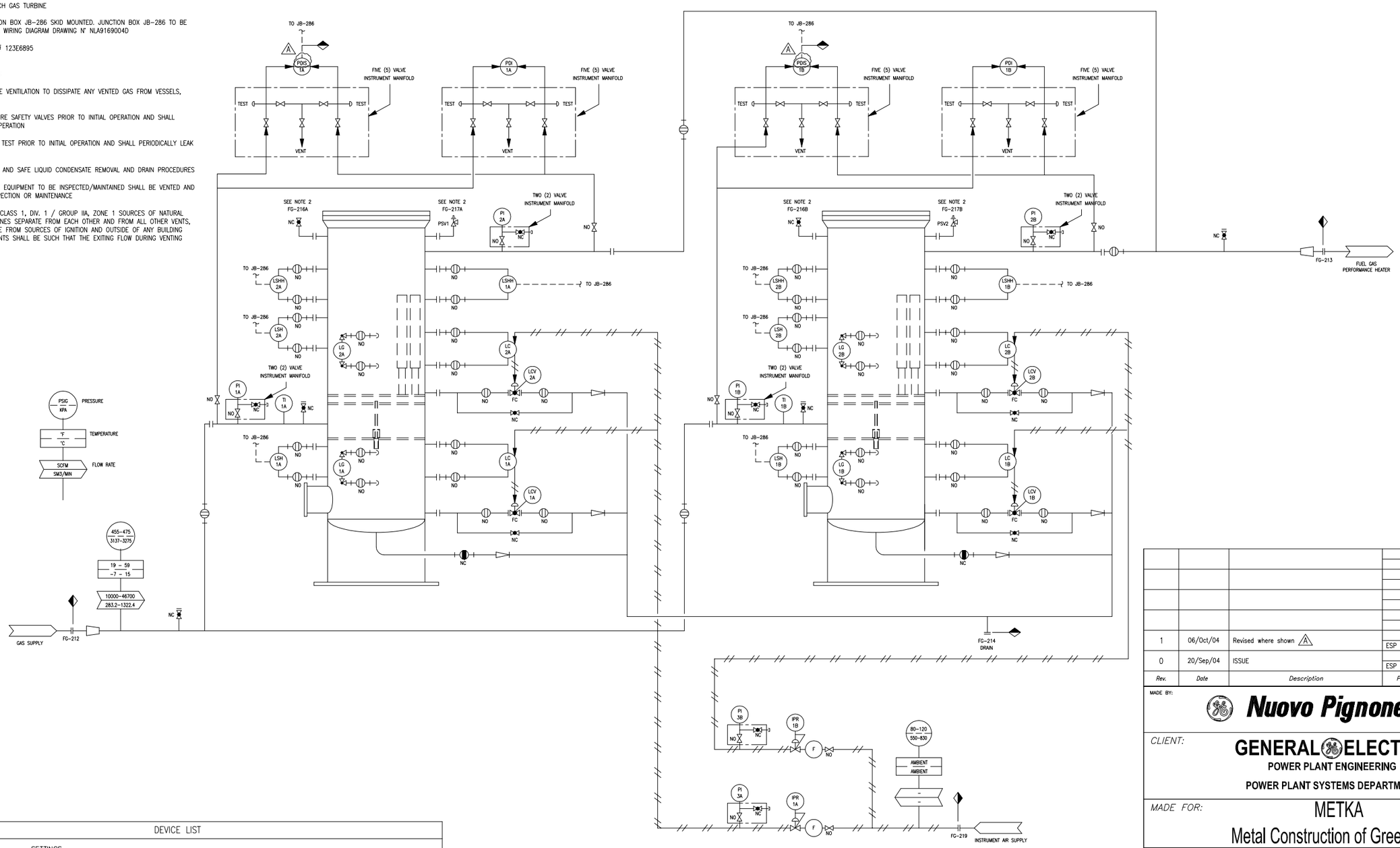

DEVICE LIST		
ISA	IEE	SETTINGS
A PDIS−1A,B	63GCF−A,B	1.5−21.8 psid [0.1−1.5 bar], 125 VDC, open to alarm MARK VI, set 15 psid [1 bar]
LSH−1A,B	71GCF−1A,B	NC, 125VDC, 0.5 A, open to alarm MARK VI, lower section (first stage)
LSH−2A,B	71GCF−2A,B	NC, 125VDC, 0.5 A, open to alarm MARK VI, upper section (second stage)
LSHH−1A,B	71GCF−3A,B	NC, 125VDC, 0.5 A, open to trip MARK VI <S>, upper section (second stage)
LSHH−2A,B	71GCF−4A,B	NC, 125VDC, 0.5 A, open to trip MARK VI <S>, upper section (second stage)
LC−1A,B	VC−20A,B	Level controller for pneumatic dump valve, lower section (first stage)
LC−2A,B	VC−21A,B	Level controller for pneumatic dump valve, upper section (second stage)
PSV−1,2	VR43−1A,B	Thermal relief valve 37.9 barg (550 psig) +/− 3%
IPR−1A,B	−	Pressure regulator (set at 80 psig)

CONNECTIONS				
CONNECTION	SIZE	SERIES	DESCRIPTION	MATERIAL
FG−212	12" A	300# RF	INLET	A105
FG−213 A	12"	300# RF	OUTLET	A105
FG−214	1"	300# RF	DRAIN	A105
FG−216A, B	1"	300# RF	VENT VALVE	A105
FG−217A, B	2"	150# RF	RELIEF VALVE	A105
FG−219 A	1"	150#	INSTRUMENT AIR	S.S. 304

GE Power Generation — GENERAL ELECTRIC COMPANY Schenectady, NY

DT− VENDOR SUPPLIED DRAWING

GE NOT TO REVISE. GE REVISION LEVEL IS AS SHOWN ON THIS APPLIQUE. THIS DOCUMENT IS FILED UNDER THE GE DRAWING NUMBER

THIS DOCUMENT SHALL BE REVISED IN ITS ENTIRETY. ALL SHEETS OF THIS DOCUMENT ARE THE SAME REVISION LEVEL AS INDICATED IN THIS VENDOR SUPPLIED DRAWING APPLIQUE.

FIRST MADE FOR: SHEET 1 of 1

GE SIGNATURES	DATE	GE DRAWING NUMBER	REV.
CHECKED:		211D7991	A
ISSUED:			

Rev.	Date	Description	Prep'd	Check'd	Appr'd
1	06/Oct/04	Revised where shown A	ESP	G.Napolitano	G.Napolitano
0	20/Sep/04	ISSUE	ESP	G.Napolitano	G.Napolitano

MADE BY: Nuovo Pignone PVS BARI

CLIENT: GENERAL ELECTRIC
POWER PLANT ENGINEERING
POWER PLANT SYSTEMS DEPARTMENT

MADE FOR: METKA
Metal Construction of Greece S.A.

PROJECT: LAVRION V CCPP

TITLE: G015 Duplex Dual Stage Vertical Absolute Separator Skid P & ID

NP JOB n°: 8109169

CONTRACT n°: 180735800

GT DM #: GR0942

LOCATION: Port of Lavrion, GREECE

Nuovo Pignone Drawing n°: NLA9169001D

Rev.	Scale:	Sheet:
1	−	1/1

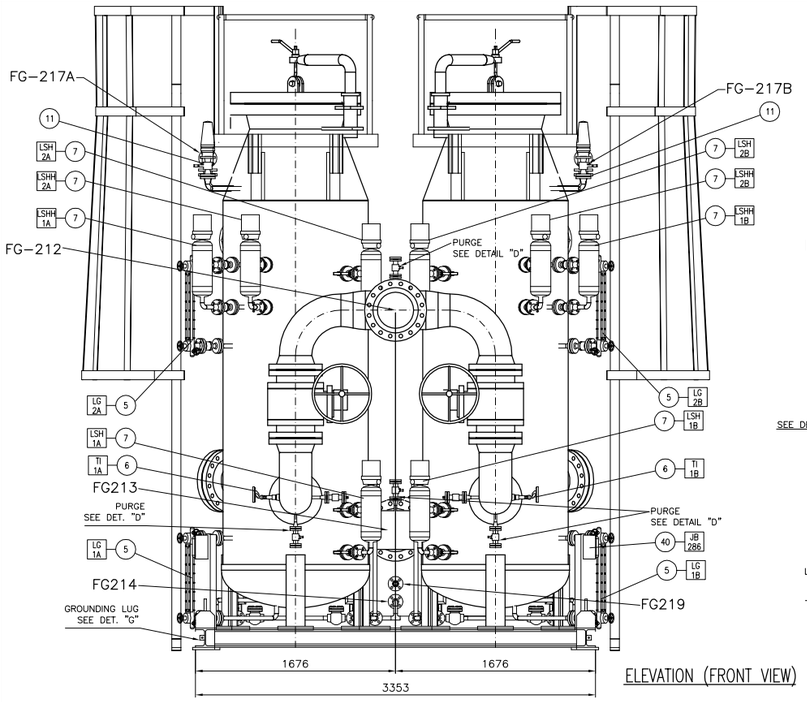

ELEVATION (FRONT VIEW)

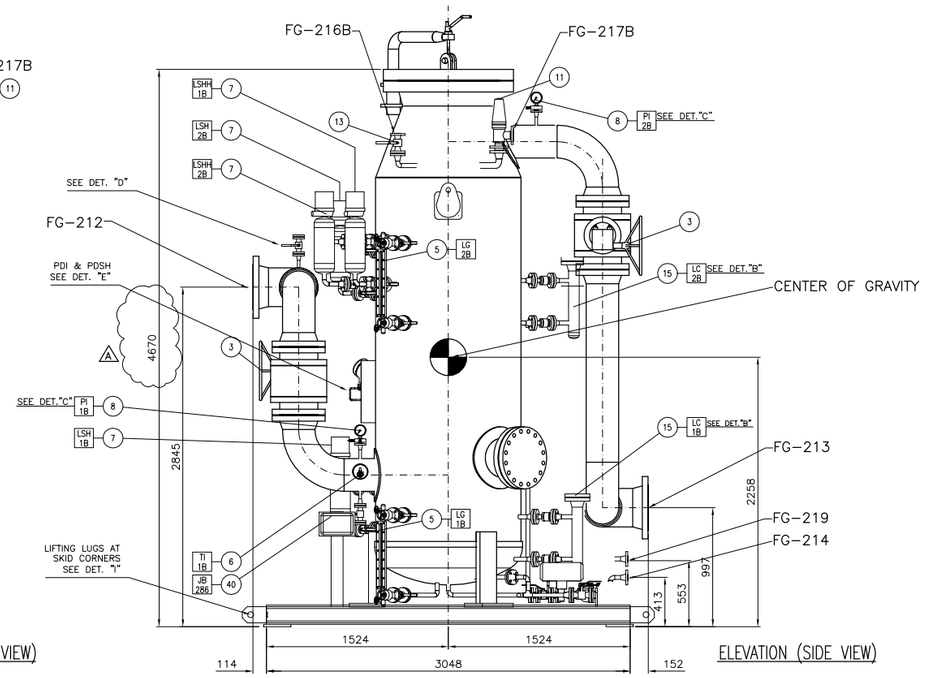

ELEVATION (SIDE VIEW)

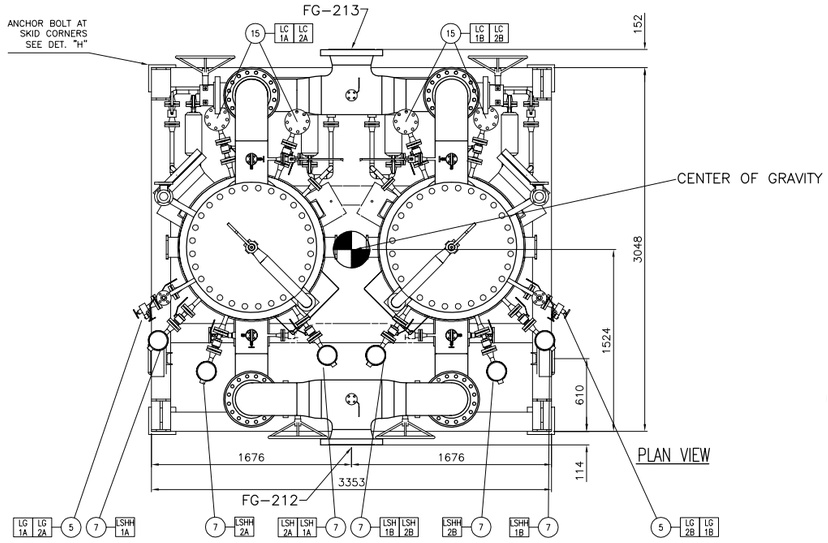

PLAN VIEW

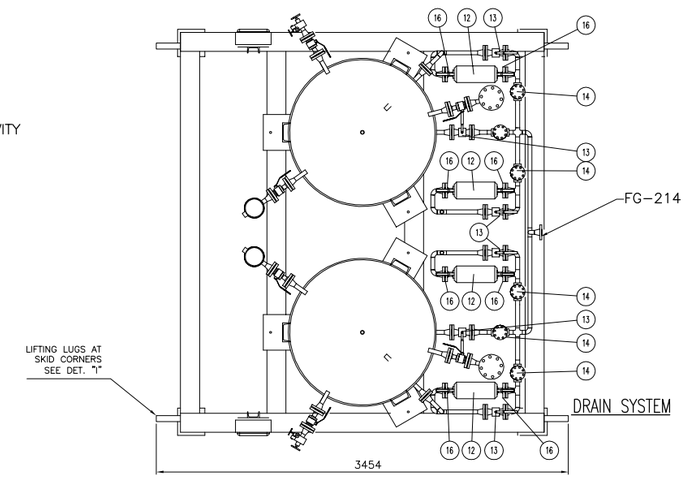

DRAIN SYSTEM

GENERAL NOTES

1. THE SYSTEM IS V ASME AND SQL STAMPED
2. DIMENSION IN MM. DIMENSION IN BRACKET ARE INCHES
3. FOR INSTALLATION, OPERATING, MAINTENANCE AND SAFETY INSTRUCTIONS SEE O&M MANUAL NLA9169005S .
4. DISCHARGE FROM THE PRESSURE SAFETY VALVES, THE VENT VALVES AND DRAINS SHALL BE PIPED TO A SAFE AREA
5. TOLERANCE: 5.2 MM [1/16 INCH PER FOOT]
6. WARNING:
   THE NOISE LEVEL DUE TO DISCHARGE FROM PRESSURE SAFETY VALVE AND VENT VALVE IS ABOUT 129 db.
   THIS OCCOURS DURING EQUIPMENT MALFUNCTION OR MAINTENANCE OPERATIONS ONLY (VENT VALVE OPENING).

Pos.	ITEM	DIMENSIONS	RATING	QTY.	MATERIAL	CODE
40	JUNCTION BOX EExe	305x147x100	–	2	ALUMINIUM	NLA090030061
39	SPARE	–	–	–	–	–
38	TEE REDUCER	½"x½"x¼"NPTF	#3000	2	A182 F316	JNA000050402
37	FLANGED TUBING CONN.	½"#600 x ½" TUB.	#600x½"	4	CARBON STEEL	NLA070010006
36	PRESSURE GAUGE	3" DIAL	–	2	SEE SPEC.	NFC394018230
35	TWO VALVE MANIFOLD	¼" NPT	#3000	2	STAINLESS STEEL	RV0560176000
34	NIPPLO	¼"x¼" NPT	#3000	2	STAINLESS STEEL	JJS060013050
33	S.W. FLANGE	1" #150 RF	#150	1	STAINLESS STEEL	JSG070206106
32	NIPPLE	½"x½" NPT	#3000	2	STAINLESS STEEL	JJS060021050
31	NIPPLE REDUCER	1" PIPE x ½" NPTM	SCH.80	1	A182 F316	JKE000060604
30	BLIND FLANGE	½" FLANGED RF R1	#300	4	CARBON STEEL	JUD001020104
29	TEE	½"NPTF	#3000	1	A182 F316	JLN000053021
28	THERMOWELL	1" B.W.x3/4" NPTF	#3000	2	STAINLESS STEEL	NLA070030023
27	TUBING	½"	0.065" THK.	26m	A269 TP316	CKU01216
26	ROOT VALVE	½" BW x ½"NPTF	#3000	4	STAINLESS STEEL	NLA070010012
25	TEE FOR TUBING	½" TUB.	#3000	6	STAINLESS STEEL	RCR46002
24	NIPPLE REDUCER	½"x¼" NPTM	#3000	4	A182 F316	JKB000060402
23	FLANGE	1/2" BW sch. 160	#600	4	A182 F316	–
22	MALE CONNECTOR	¼"NPTMx½"TUB.	#3000	20	STAINLESS STEEL	RCR46026
21	PRESS. REG./FILTER	¼" X ¼" NPTF	#3000	2	STAINLESS STEEL	NIC342301602
20	MALE CONNECTOR	½"NPTMx½"TUB.	#3000	2	STAINLESS STEEL	RCR46028
19	THD. BALL VALVE	½" NPT	#800	2	ASTM A351 CF8M	JXG080480020
18	THREE VALVE MANIFOLD	½" NPT+FITTINGS	#3000	4	STAINLESS STEEL	NLA070010010
17	BALL VALVE	½" FLANGED RF/R1	#300	12	CARBON STEEL	NLA050010269
16	BALL VALVE	1" FLANGED RF R1	#300	40	CARBON STEEL	NLA050010268
15	PNEU. LEV. CONTROLLER	365mm	#300	4	SEE SPEC.	NLA040010192
14	CHECK VALVE	1" B.W.	#300	6	CARBON STEEL	JXD010670800
13	BALL VALVE	1" FLANGED RF R1	#300	8	CARBON STEEL	NLA050010258
12	LEVEL CONTROL VALVE	1" FLANGED RF/R1	#300	4	CARBON STEEL	NLA050010257
11	PRESSURE SAFETY VALVE	ø1.5"xø2" RF/R1	#300x#150	2	CARBON STEEL	NLA050030120
10	DIFF. PRESS. GAUGE	5" DIAL	–	2	SEE SPEC.	NLA040020088
9	DIFF. PRESS. SWITCH	–	–	2	SEE SPEC.	RP0293533100
8	PRESSURE GAUGE	4 1/2" DIAL	–	4	SEE SPEC.	NLA040020107
7	ELECTRIC LEVEL SWITCH	FLANGED 1"	#300	8	SEE SPEC.	NLA040010193
6	TEMPERATURE INDICATOR	5" DIAL	–	2	SEE SPEC.	NLA040020093
5	LEVEL GAUGE	–	#300	4	SEE SPEC.	RJO229630100
4	SPARE	/	/	/	/	/
3	BALL VALVE (chain)	ø10" RF/R1	#300	4	CARBON STEEL	NIC3854174004
2	FILTER SEPARATOR	ø48"	#300	1	CARBON STEEL	NLA020020090
1	FILTER SEPARATOR	ø48"	#300	1	CARBON STEEL	NLA020020089

REFERENCE DRAWINGS

P&ID NLA9169001D

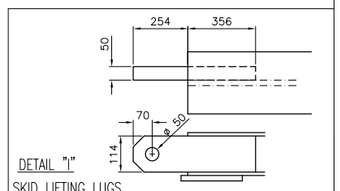

DETAIL "I"
SKID LIFTING LUGS
4 PIECES REQUIRED
LOCATED AT SKID CORNERS

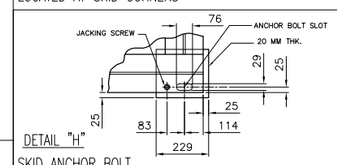

DETAIL "H"
SKID ANCHOR BOLT
4 PIECES REQUIRED (FOR 7/8"-9 UNC BOLT)
LOCATED AT SKID CORNERS

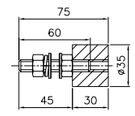

DETAIL "G"
SKID GROUNDIN LUGS
2 PIECES REQUIRED WELDED AT OPPOSITE SKID SIDE
MATERIAL S.S. AISI 304

PROCESS AND DESIGN DATA	
FLOW RATE	31.85 – 1557.4 Sm3/min
OPERATIVE PRESSURE	31.37 – 32.75 barg
OPERATIVE TEMPERATURE	10 – 20 °C
MAX ΔP ACROSS SKID	0.34 bar AT MAX FLOW AND CLEAN CARTRIDGES
DESIGN PRESSURE	41.4 barg
DESIGN TEMPERATURE	(–28.9) – 121.1 °C
DRY WEIGHT	20000 KG
FULL OF WATER WEIGHT	24000 KG

SCHEDULE OF CONNECTION			
CONNECTION	SIZE	SERIES	DESCRIPTION
FG-212	12"	300# RF	INLET
FG-213	12"	300# RF	OUTLET
FG-214	1"	300# RF	DRAIN
FG-216 A,B	1"	300# RF	VENT
FG-217 A,B	2"	150# RF	RELIEF VALVES
FG-219	1"	150# RF SS	INSTRUMENT AIR
–	–	–	–

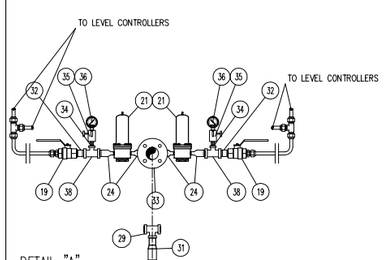

DETAIL "A"
INSTRUMENT GAS FEED ASSEMBLY

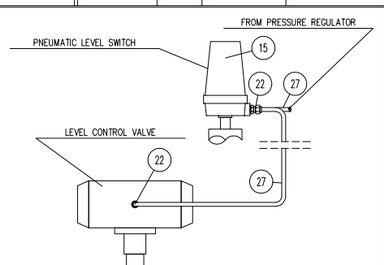

DETAIL "B"
LEVEL CONTROL VALVE PNEUMATIC CONNECTION (4 POSITIONS)

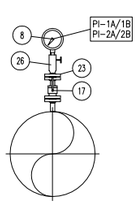

DETAIL "C"
PRESSURE GAUGE ASSEMBLY (4 POSITIONS)

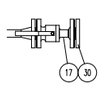

DETAIL "D"
PURGE & PIPING VENT VALVES (4 POSITIONS)

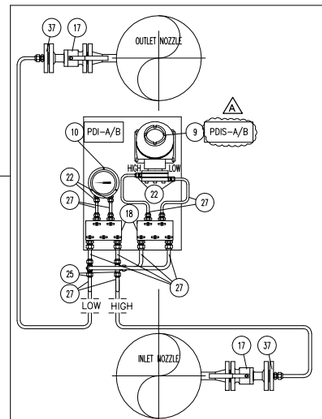

DETAIL "E"
PI-PDI-PDSH ASSEMBLY (2 SETS)

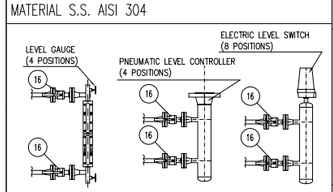

DETAIL "F"
LEVEL INSTRUMENT ASSEMBLY

GE Power Generation — GENERAL ELECTRIC COMPANY, Schenectady, NY

DT– VENDOR SUPPLIED DRAWING

GE NOT TO REVISE. GE REVISION LEVEL IS AS SHOWN ON THIS APPLIQUE. THIS DOCUMENT IS FILED UNDER THE GE DRAWING NUMBER

THIS DOCUMENT SHALL BE REVISED IN ITS ENTIRETY. ALL SHEETS OF THIS DOCUMENT ARE THE SAME REVISION LEVEL AS INDICATED IN THIS VENDOR SUPPLIED DRAWING APPLIQUE.

FIRST MADE FOR: SHEET 1 of 1

GE SIGNATURES	DATE	GE DRAWING NUMBER	REV.
CHECKED:		211D7992	A
ISSUED:			

Rev.	Date	Description	Prep'd	Check'd	Appr'd
1	05/Oct/04	Revised where shown (A)	ESP	G.Napolitano	G.Napolitano
0	27/Sep/04	ISSUE	ESP	G.Napolitano	G.Napolitano

MADE BY: Nuovo Pignone PVS BARI

CLIENT: GENERAL ELECTRIC — POWER PLANT ENGINEERING — POWER PLANT SYSTEMS DEPARTMENT

MADE FOR: **METKA**
Metal Construction of Greece S.A.

PROJECT: LAVRION V CCPP

TITLE: G015 Duplex Dual Stage Vertical Absolute Separator Skid General Arrangement

NP JOB n°: 8109169
CONTRACT n°: 180735800
GT DM#: GR0942
LOCATION: Port of Lavrion, GREECE

Nuovo Pignone Drawing n°: NLA9169002D

Rev.	Scale:	Sheet:
1	–	1/1

GENERAL NOTES

1. Design pressure: 41.4 barg (600 psig)
   Max pressure drop across skid: 0.69 bar (10 psi)

2. Design temperature: −28.9 °C to 232.2 °C (−20 °F to 450 °F)

3. Start Up Heater electrically rated for 35% GT flow and for ΔT=27.8 °C (50 °F) with performance heater off. When the performance heater is on the inlet temperature of the Start Up Heater is 185 °c [365 °F]. In this condition the Start Up Heater shall be off.

4. The skid is CE stamped according to applicable EU Directives. In particular it is CE stamped according to 97/23/EC Directive (Category IV)and 94/9/EC Directive Ex II 3 G

5. Junction boxes JB310A and JB310B to be wired to Heater Control Panel by End User (see drawing NLA9170003D).
Heater Control Panel to be installed in safe area at maximum 300 m (1000 ft) far from skid.

6. End User shall insulate and heat trace all piping from electric gas heater outlet FG81 to gas turbine inlet connection FG1 to maintain 37.8 °C [100 °F] pipe temperature on electric heater shut down to prevent freezing and condensate formation in fuel gas piping.

7. SAFETY NOTES:
A) Follow O&M Manual NLA9170010S

B) The system will operate with natural gas under pressure. This can produce an explosive mixture with air all around the Heater skid. The Heater skid has been designed, manufactured and assembled to operate in an area classified Zone 2 according to EN 60079−10. See the drawing NLA9170005D for more detail regarding the hazardous area layout

C) Vent to safe area. FG82, 83, 84 are potential Class 1, Div 1 / Group IIA, Zone 1 sources of Natural Gas. Installer shall route these lines separate from each others and from all other vents to a naturally ventilated area free from sources of ignition and outside of any building enclosures. The terminus of the vents shall be such that the existing flow during venting operations is directed upwards.

D) End User shall provide adequate ventilation to dissipate any vented gas from vessels, piping, valves

E) End User shall test the pressure safety valves prior to initial operation and shall periodically re−test for proper operation.

F) End User shall perform a leak test prior to initial operation and shall periodically leak check/test the system

G) End User shall ensure that the Equipment to be inspected/maintained shall be vented and purged with nitrogen prior to inspection/maintenance

H) End User shall insulate the heater, piping, valves due to the presence of hot surfaces

I) A full flow pressure safety valve must be installed upstream the system for over pressure protection in order to not exceed the design pressure. The Heater skid is equipped with pressure safety valves for over pressure due to external fire only

L) Disconnect & isolate all energy sources (electrical & gas pressure) before working on, disassembling or modifying equipment or system components.

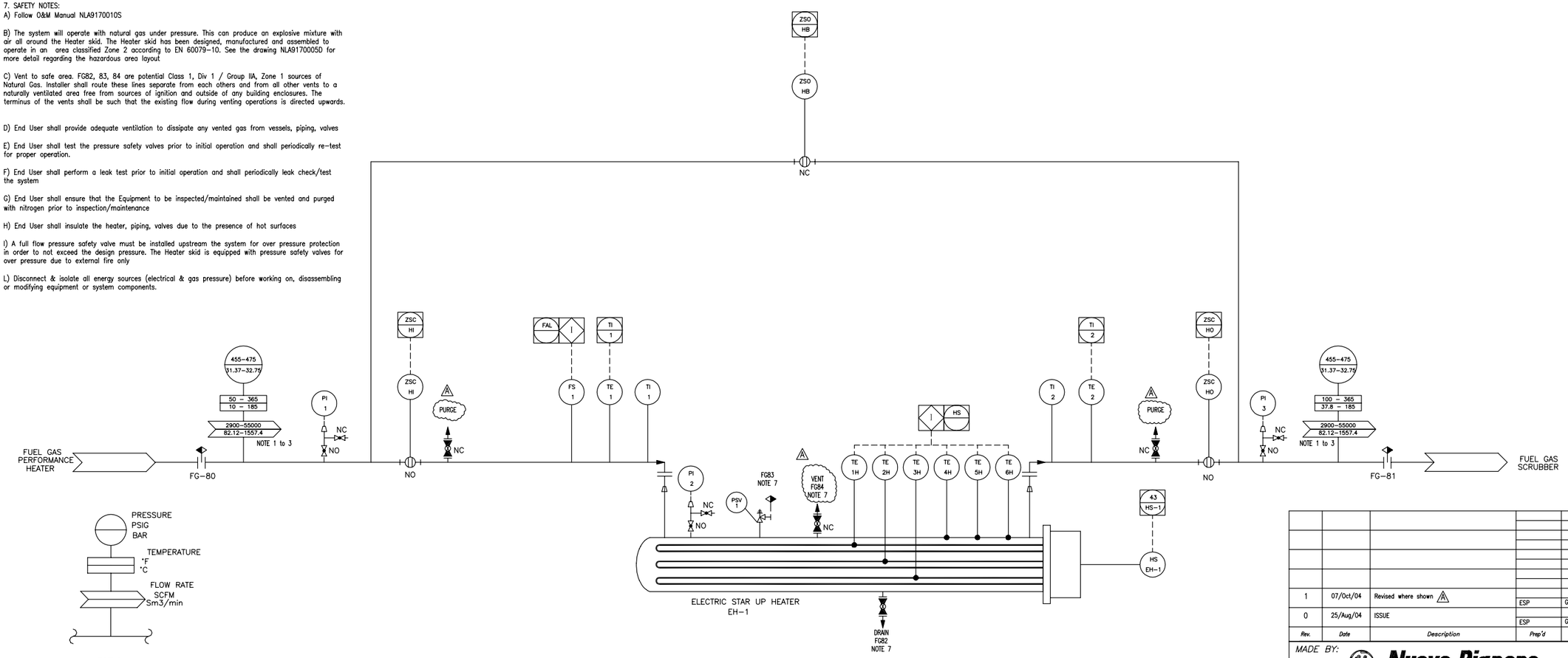

DEVICE SUMMARY		
IEEE	ISA	SETTINGS
23FH−1	EH−1	500 kW TOTAL, 400 VAC, 3ph, 50 Hz (FOR GT STAR UP)
96FH−1	TE−1	−5 − 50 mV OUTPUT, TYPE K, UNGROUNDED JUNCTION
96FH−2	TE−2	−5 − 50 mV OUTPUT, TYPE K, UNGROUNDED JUNCTION
26FH−1, 2, 3, 4, 5, 6	TE−1H, 2H, 3H 4H, 5H, 6H	−5 − 50 mV OUTPUT, TYPE K, UNGROUNDED JUNCTION, HEAER TRIP AT 450 °F
VR14−7	PSV−1	THERMAL RELIEF VALVE, 37.9 BARG (550 PSIG) ±3%
80FH−1	FS−1	FLOW SWITCH LOW, NC, 24 VDC, OPEN TO TRIP HEATER 68 kg/min (150 lb/min)
43HS−1	HS−EH1	EMERGENCY STOP SWITCH
33HB−1	ZSO−HB	HEATER BYPASS VALVE OPEN LIMIT SWITCH
33HI−1	ZSC−HI	HEATER INLET VALVE CLOSED LIMIT SWITCH
33HO−1	ZSC−HO	HEATER OUTLET VALVE CLOSED LIMIT SWITCH
–	–	–

SCHEDULE OF CONNECTION			
CONNECTION	SIZE	SERIES	DESCRIPTION
FG−80	12"	300# RF	INLET
FG−81	12"	300# RF	OUTLET
FG−82	1"	300# RF	DRAIN
FG−83	1"	300# RF	RELIEF VALVE
FG−84	1"	300# RF	VENT
–	–	–	–

GE Power Generation — GENERAL ELECTRIC COMPANY Schenectady, NY

DT− VENDOR SUPPLIED DRAWING

GE NOT TO REVISE. GE REVISION LEVEL IS AS SHOWN ON THIS APPLIQUE. THIS DOCUMENT IS FILED UNDER THE GE DRAWING NUMBER

THIS DOCUMENT SHALL BE REVISED IN ITS ENTIRETY. ALL SHEETS OF THIS DOCUMENT ARE THE SAME REVISION LEVEL AS INDICATED IN THIS VENDOR SUPPLIED DRAWING APPLIQUE.

FIRST MADE FOR: SHEET 1 of 1

GE SIGNATURES	DATE	GE DRAWING NUMBER	REV.
DRAWN:		211D7995	A
SEALED:			

Rev.	Date	Description	Prep'd	Check'd	Appr'd
1	07/Oct/04	Revised where shown	ESP	G.Napolitano	G.Napolitano
0	25/Aug/04	ISSUE	ESP	G.Napolitano	G.Napolitano

MADE BY: Nuovo Pignone PVS BARI

CLIENT: GENERAL ELECTRIC
POWER PLANT ENGINEERING
POWER PLANT SYSTEMS DEPARTMENT

MADE FOR: METKA -Metal Construction of Greece S.A.

PROJECT: LAVRION V CCPP

TITLE: G012 Electric Start Up Heater P & ID

NP Job: 8109170
Contract Nr.: 180739568
GT DM. #: GR0942
Location: Port of Lavrion, GREECE

Nuovo Pignone Drawing n°: NLA9170001D

Rev.	Scale:	Sheet:
1	–	1/1

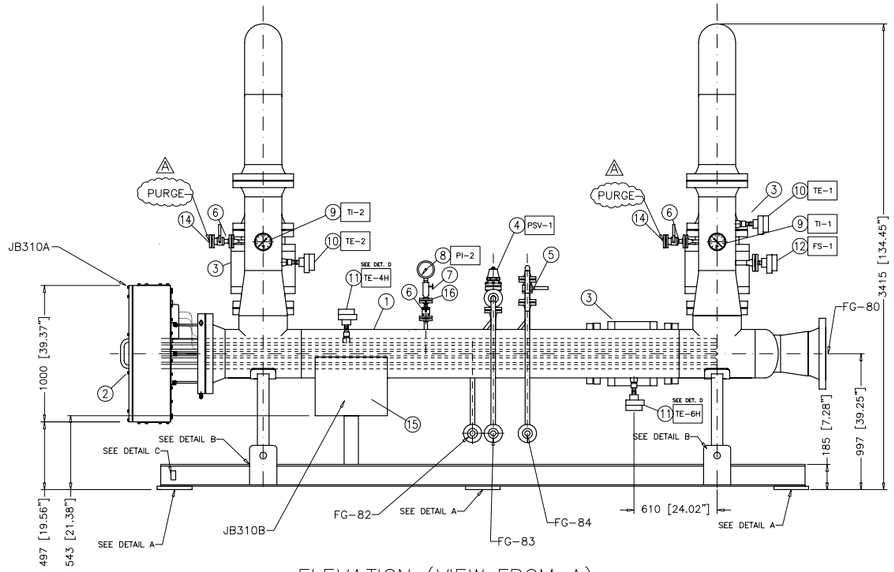

ELEVATION (VIEW FROM A)

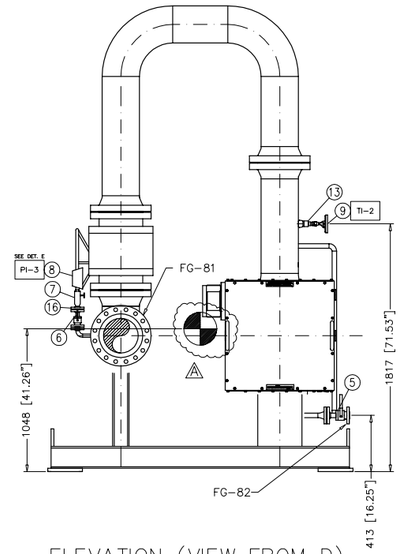

ELEVATION (VIEW FROM D)

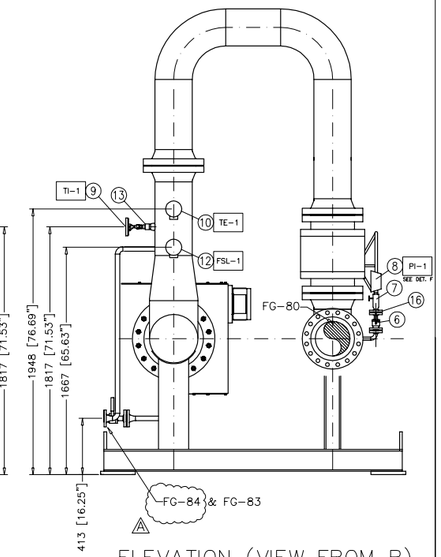

ELEVATION (VIEW FROM B)

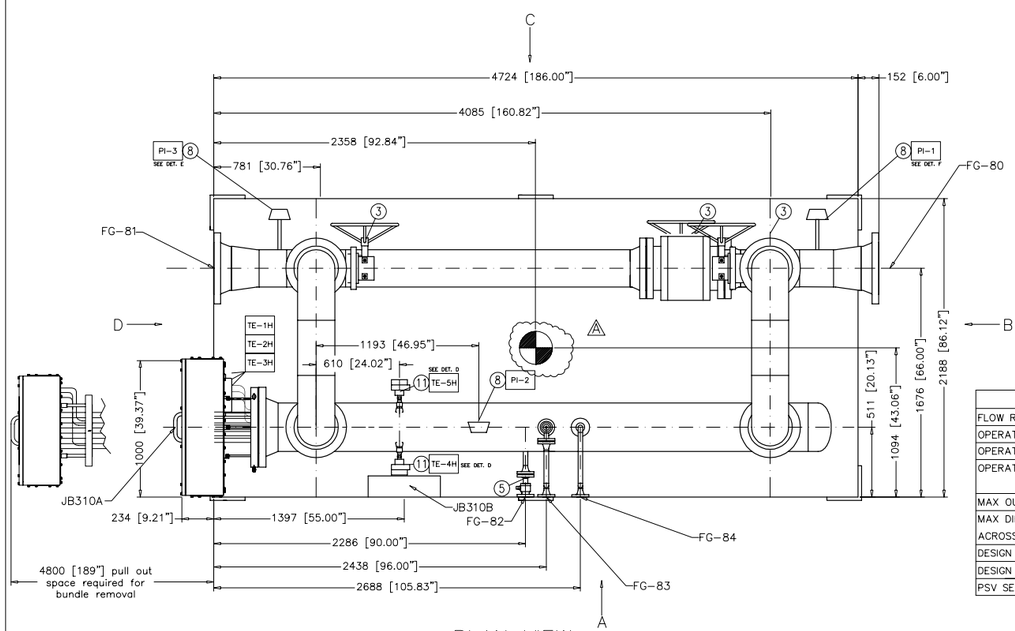

PLAN VIEW

GENERAL NOTES

1. Start Up Heater electrically rated for 35% GT flow and for ΔT=27.8 °C (50 °F) with performance heater off. When the performance heater is on the inlet temperature of the Start Up Heater is 185 °C [365 °F]. In this condition the Start Up Heater shall be off.

2. The skid is CE stamped according to applicable EU Directives. In particular it is CE stamped according to 97/23/EC Directive (Category IV)and 94/9/EC Directive Ⓔx II 3 G

3. Junction boxes JB310A and JB310B to be wired to Heater Control Panel by End User (see drawing NLA9170003D).
Heater Control Panel to be installed in safe area at maximum 300 m (1000 ft) far from skid.

4. End User shall insulate and heat trace all piping from electric gas heater outlet FG81 to gas turbine inlet connection FG1 to maintain 37.8 °C [100 °F] pipe temperature on electric heater shut down to prevent freezing and condensate formation in fuel gas piping.

5. SAFETY NOTES:
A) Follow O&M Manual NLA9170010S

B) The system will operate with natural gas under pressure. This can produce an explosive mixture with air all around the Heater skid. The Heater skid has been designed, manufactured and assembled to operate in an area classified Zone 2 according to EN 60079-10. See the drawing NLA9170005D for more detail regarding the hazardous area layout

C) Vent to safe area. FG82, 83, 84 are potential Class 1, Div 1 / Group IIA, Zone 1 sources of Natural Gas. Installer shall route these lines separate from each others and from all other vents to a naturally ventilated area free from sources of ignition and outside of any building enclosures. The terminus of the vents shall be such that the existing flow during venting operations is directed upwards.

D) End User shall provide adequate ventilation to dissipate any vented gas from vessels, piping, valves

E) End User shall test the pressure safety valves prior to initial operation and shall periodically re-test for proper operation.

F) End User shall perform a leak test prior to initial operation and shall periodically leak check/test the system

G) End User shall ensure that the Equipment to be inspected/maintained shall be vented and purged with nitrogen prior to inspection/maintenance

H) End User shall insulate the heater, piping, valves due to the presence of hot surfaces

I) A full flow pressure safety valve must be installed upstream the system for over pressure protection in order to not exceed the design pressure. The Heater skid is equipped with pressure safety valves for over pressure due to external fire only

L) Disconnect & isolate all energy sources (electrical & gas pressure) before working on, disassembling or modifying equipment or system components.

GE Power Generation — GENERAL ELECTRIC COMPANY, Schenectady, NY

DT- VENDOR SUPPLIED DRAWING

GE NOT TO REVISE. GE REVISION LEVEL IS AS SHOWN ON THIS APPLIQUE. THIS DOCUMENT IS FILED UNDER THE GE DRAWING NUMBER

THIS DOCUMENT SHALL BE REVISED IN ITS ENTIRETY. ALL SHEETS OF THIS DOCUMENT ARE THE SAME REVISION LEVEL AS INDICATED IN THIS VENDOR SUPPLIED DRAWING APPLIQUE.

FIRST MADE FOR: SHEET 1 of 1

GE SIGNATURES	DATE	GE DRAWING NUMBER	REV.
CHECKED:		211D7996	A
ISSUED:			

REFERENCE DRAWINGS

NLA9170001D P&ID

MATERIAL LIST

POS	TYPE	SIZE & TYPE	RATING	Q.TY	MATERIAL	MATERIAL CODE
01	VESSEL	14" x 10" IN/OUT	300#	1	CARBON STEEL	NLA020080019
02	HEATER BUNDLE INCLUDING THERMOCOUPLE TE-1H, TE-2H AND TE-3H	500 kW EExe	300#	1	CS / SS	NLA020080020
03	BALL VALVE WITH LIMIT SWITCH	10" FLANGED	300#	3	CARBON STEEL	NLA050010261
04	PRESSURE SAFETY VALVE	3/4"x1" FLANGED	300#	1	CARBON STEEL	NLA050030113
05	BALL VALVE	1" FLANGED	300#	2	CARBON STEEL	NLA050010266
06	BALL VALVE	1/2" FLANGED	300#	5	CARBON STEEL	NLA050010267
07	PRESSURE GAUGE VALVE	1/2" B.W. X 1/2" NPT	Sch 160	3	S.S. 316	NLA070010012
08	PRESSURE INDICATOR	ø4.5" x 1/2" NPTM	---	3	SEE DATA SHEET	NLA040020107
09	TEMPERATURE INDICATOR	ø5" x 3/4" NPTM	---	2	SEE DATA SHEET	NLA040020106
10	THERMOCOUPLE K + WELL	1"SWX1/2" NPTM	---	2	SEE DATA SHEET	NLA040010171
11	THERMOCOUPLE K (VESSEL)	3/4" NPTM	---	3	SEE DATA SHEET	NLA040010173
12	FLOW SWITCH	1" FLANGED	300#	1	SEE DATA SHEET	NLA040010199
13	TEMPERATURE WELL	1"SWx3/4"NPTF	3000#	2	S.S. 316	NLA070030023
14	BLIND FLANGE	1/2" RF	300#	2	CARBON STEEL	-
15	JUNCTION BOX	530X430 MM -		1	ALUMINIUM	NLA090030057
16	FLANGE	1/2" WN	300#	3	CARBON STEEL	-

PROCESS AND DESIGN DATA	
FLOW RATE	82.12 – 1557.4 Sm3/min [2900 – 55000 SCFM]
OPERATIVE PRESSURE	33 – 37.9 BARG [479 – 550 PSIG]
OPERATIVE INLET TEMPERATURE	10 °C [50 °F]
OPERATIVE OUTLET TEMPERATURE	27.8 °C [50 °F] INCREASE RISE FROM INLET AT 35% OF MAX FLOW RATE AND PERFORMANCE HEATER OFF
MAX OUTET TEMPERATURE	185 °C [365 °F] WITH PERFORMANCE HEATER ON
MAX DIFFERENTIAL PRESSURE ACROSS SKID	0.69 BAR [10 PSI] AT MAX FLOW RATE
DESIGN PRESSURE	41.4 BARG [600 PSIG]
DESIGN TEMPERATURE	(–28.9) – 232 °C [(–20) – 450 °F]
PSV SET PRESSURE	37.9 BARG (550 PSIG)

LOAD TABLE	
DRY WEIGHT	70000 N [15737 lb]
FULL OF WATER WEIGHT	85000 N [19109 lb]
MAX. NOZZLE FORCE	4155 N [934 lb]
MAX. NOZZLE MOMENT	2531 Nm [1867 ft–lb]

SCHEDULE OF CONNECTION

CONNECTION	SIZE	SERIES	DESCRIPTION
FG-80	12"	300# RF	INLET
FG-81	12"	300# RF	OUTLET
FG-82	1"	300# RF	DRAIN
FG-83	1"	300# RF	RELIEF VALVE
FG-84	1"	300# RF	VENT
–	–	–	–

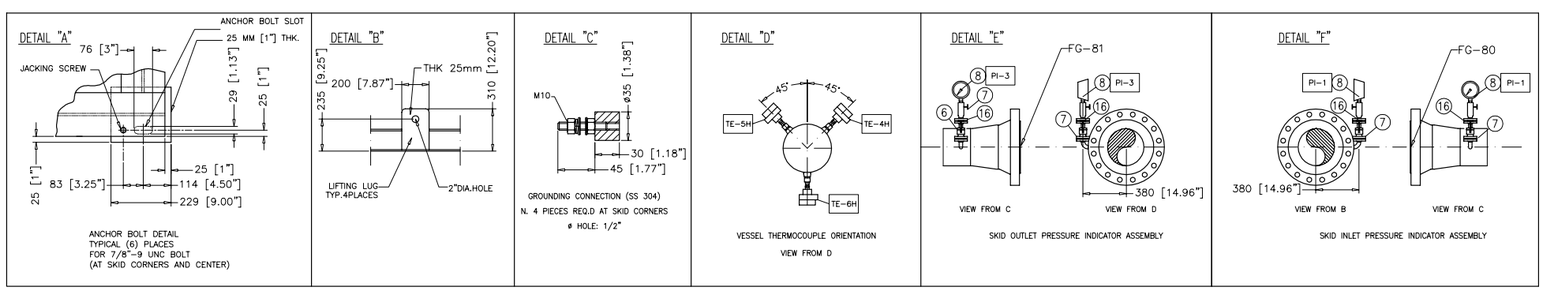

Rev.	Date	Description	Prep'd	Check'd	Appr'd
1	07/Oct/2004	Revised where shown △1	ESP	G.Napolitano	G.Napolitano
0	25/Aug/2004	FIRST ISSUE	ESP	G.Napolitano	G.Napolitano

MADE BY: Nuovo Pignone PVS BARI

CLIENT: GENERAL ELECTRIC — POWER PLANT ENGINEERING, POWER PLANT SYSTEMS DEPARTMENT

MADE FOR: METKA -Metal Construction of Greece S.A.

PROJECT: LAVRION V CCPP

TITLE: G012 Electric Start Up Heater (500 kW) General Arrangement

NP Job: 8109170
Contract Nr.: 180739568
GT DMF: GR0942
Location: Port of Lavrion, GREECE

Document Number: NLA9170002D

Rev.	Scale:	Sheet:
1	-	1/1

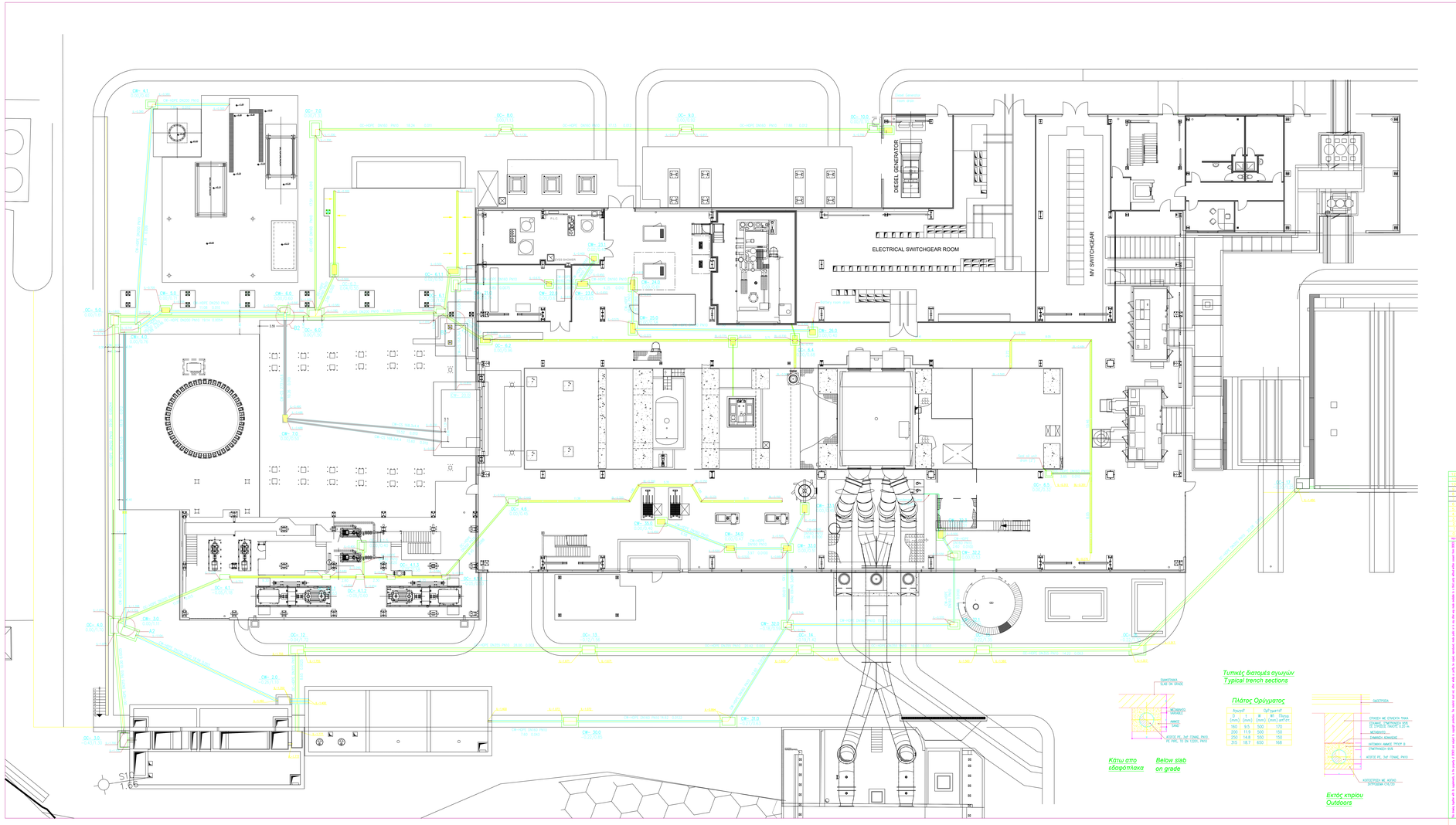

ΤΠΟΜΝΗΜΑ – LEGEND

ΠΑΡΑΤΗΡΗΣΕΙΣ – NOTES

Τυπικές διατομές αγωγών
Typical trench sections

Πλάτος Ορύγματος

Ονομ/τό (mm) D	t (mm)	H (mm)	W (mm)	Πλάτος (mm) απ/ρτ.
160	9.5	500	130	
200	11.9	500	150	
250	14.8	500	150	
315	18.7	650	168	

Κάτω από εδαφόπλακα
Below slab on grade

Εκτός κτιρίου
Outdoors

PUBLIC POWER CORPORATION
LAVRION V-COMBINED CYCLE POWER PLANT
GREECE
DMKT 11 21 302

Contractor
METKA
11 MAR. ANTYPA
GR 14121 IRAKLIO ATHENS

Keyplan

Subcontractors
DENCO
CONEM SA

Stamp - Signature

Subject
ΔΙΚΤΥΑ ΒΙΟΜΗΧΑΝΙΚΩΝ ΑΠΟΒΑΗΤΩΝ
INDUSTRIAL WASTE DRAINAGE

Drawing Nr.
5-GMB-CDA-DEN-001-R12

Format A0 | Scale 1 : 100 | Sheet 1 of 1

Superseded by | Supersedes 5-GMB-CDA-DEN-001-R11

PROJECT/CTR-LAVROS-CONEM/CTR-ΒΙΟΜΗΧΑΝΙΚΑ ΑΠΟΒΛΗΤΑ - R11

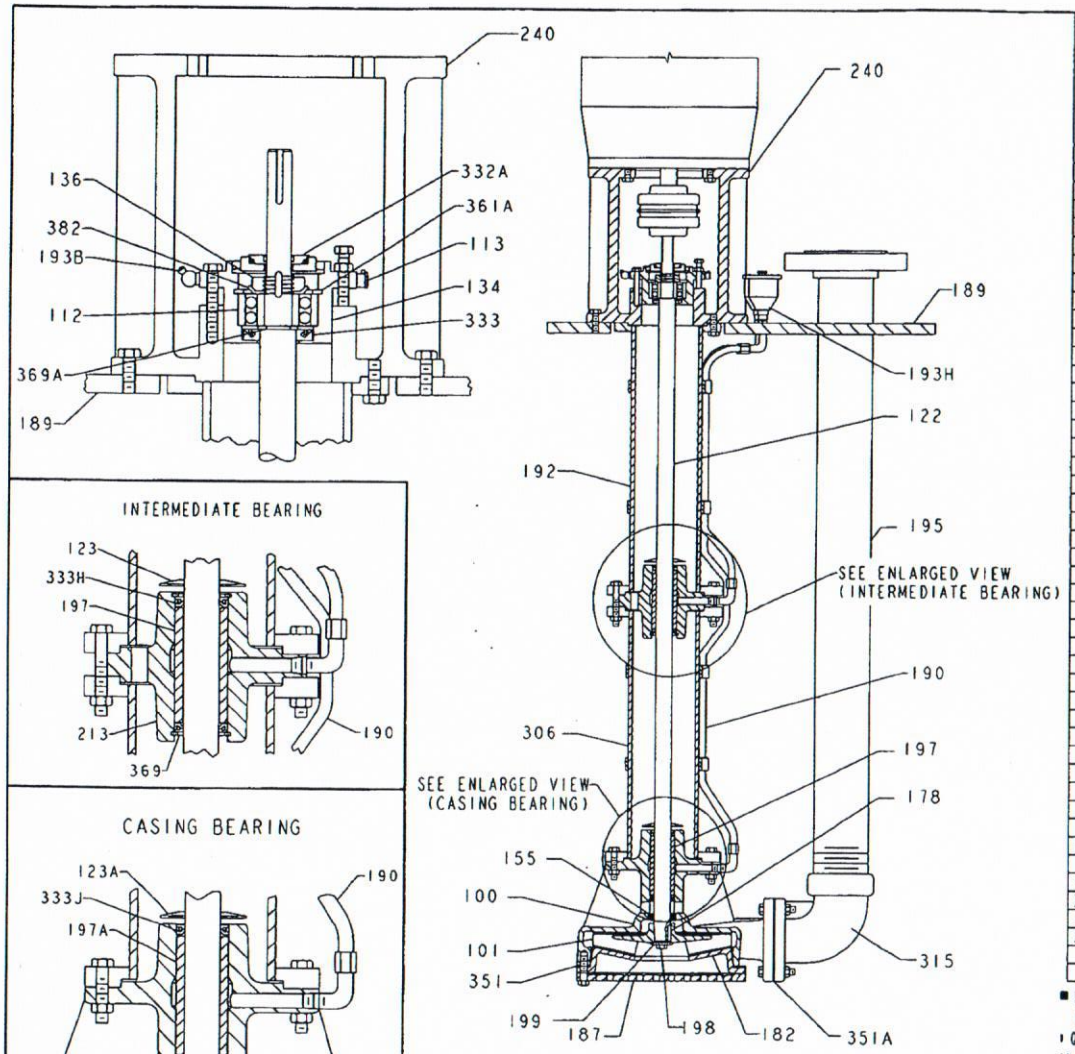

Parts List and Materials of Construction

ITEM NO.	NO. REQ'D PER PUMP	PART NAME	Standard Materials of Construction					
			■ ALL IRON	☐ BRONZE FITTED	☐ ALL BRONZE	☐ ALL 316SS	☐ ALL ALLOY 20	☐ ALL HASTELLOY B OR C
100	1	CASING	C. IRON	C. IRON	BRONZE	316	GA20	HASTELLOY
101	1	IMPELLER	D. IRON	BRONZE	BRONZE	316	GA20	HASTELLOY
112	1	BALL BEARING	STEEL	STEEL	STEEL	STEEL	STEEL	STEEL
113	1	RELIEF FITTING	STEEL	STEEL	STEEL	STEEL	STEEL	STEEL
122	1	PUMP SHAFT	416SS	STEEL	316	316	C20	HASTELLOY
123	*	DEFLECTOR	EPDM	EPDM	EPDM	EPDM	EPDM	EPDM
123A	1	DEFLECTOR	EPDM	EPDM	EPDM	EPDM	EPDM	EPDM
134	1	BEARING SHELL	CAST IRON	CAST IRON	CAST IRON	CAST IRON	CAST IRON	CAST IRON
136	1	BEARING LOCK NUT	STEEL	STEEL	STEEL	STEEL	STEEL	STEEL
155	1	CASING BUSHING	CARBON TEFLON	CARBON TEFLON	CARBON TEFLON	CARBON TEFLON	CARBON TEFLON	CARBON TEFLON
178	1	IMPELLER KEY	316	316	316	316	C20	HASTELLOY
182	1	SUCTION COVER	C. IRON	C. IRON	BRONZE	316	GA20	HASTELLOY
187	1	STRAINER	C. IRON	C. IRON	BRONZE	316	GA20	HASTELLOY
189	1	PUMP SUPPORT PLATE	STEEL OR AS SPECIFIED					
190	*	LUBRICATION OR FLUSH PIPE	STEEL	STEEL	316	316	C20	HASTELLOY
192	1	HEAD COLUMN	STEEL	STEEL	BRASS	316	C20	HASTELLOY
193B	1	GREASE FITTING	STEEL	STEEL	STEEL	STEEL	STEEL	STEEL
193H	*	GREASE CUP	STEEL	STEEL	STEEL	STEEL	STEEL	STEEL
195	1	DISCHARGE PIPE	STEEL	STEEL	BRASS	316	C20	HASTELLOY
197	*	STEADY BEARINGS	■ MATERIAL SPECIFIED BELOW					
197A	1	STEADY BEARINGS	■ MATERIAL SPECIFIED BELOW					
198	1	IMPELLER SCREW	316	316	316	316	C20	HASTELLOY
199	1	IMPELLER WASHER	316	316	316	316	C20	HASTELLOY
213	*	STEADY BEARING HOUSING	C. IRON	C. IRON	BRONZE	316	GA20	HASTELLOY
221	1	UPPER STUFFING BOX (WHEN USED)	CAST IRON OR AS SPECIFIED					
240	1	MOTOR SUPPORT	C. IRON	C. IRON	C. IRON	C. IRON	C. IRON	C. IRON
306	*	COLUMN EXTENSION	STEEL	STEEL	BRASS	316	C20	HASTELLOY
315	1	DISCHARGE ELBOW	C. IRON	C. IRON	BRONZE	316	GA20	HASTELLOY
332A	1	LABYRINTH SEAL	TEFLON	TEFLON	TEFLON	TEFLON	TEFLON	TEFLON
333	1	LIP SEAL	NITRILE					
333H	*	LIP SEAL (STEADY BEARING)	NITRILE		VITON			
333J	2	LIP SEAL (STEADY BEARING)	NITRILE		VITON			
351	1	GASKET-SUCTION COVER TO CASING	NITRILE ACRYLIC					
351A	1	GASKET-DISCH. ELBOW TO CASING	NITRILE ACRYLIC					
361A	1	RETAINING RING-BALL BEARING	STEEL	STEEL	STEEL	STEEL	STEEL	STEEL
369	*	RETAINING RING-STEADY BEARING	S/S	S/S	S/S	S/S	C20	HASTELLOY
369A	**	RETAINING RING- SHAFT	STEEL	STEEL	STEEL	STEEL	STEEL	STEEL
369B	2	RETAINING RING-STEADY BEARING	S/S	S/S	S/S	S/S	C20	HASTELLOY
382	1	BEARING LOCKWASHER	STEEL	STEEL	STEEL	STEEL	STEEL	STEEL

■ BEARING MATERIAL ●CARBON ○RUBBER ○VITON ○BRONZE ○OTHER.....
USE ALLOY SHAFT WITH RUBBER OR VITON BEARINGS
* QUANTITY IS DEPENDENT ON THE PIT DEPTH
** ONLY USED ON GROUPS "M"/"MT" AND "L"

ALL DIMENSIONS IN INCHES

REV	ISS	ZONE

GOULDS SERIAL NO. 439A/B483
CUSTOMER METAL CONSTRUCTION OF GREECE SA (METKA) for LAVRION V COMBINED CYCLE POWER PLANT
CUSTOMER P.O. NO. A-01632/AT/a1
ITEM NO. 5GN10-AP001/2
SERVICE CHEMICAL EFFLUENTS SUMP PIT PUMPS

DRAWING IS NOT TO SCALE

CERTIFIED:
☐ FOR APPROVAL
■ FOR RECORD
BY: SIGNATURE DATE 04-29-05

TITLE SECTIONAL ASSEMBLY
MODEL 3171 SEALED BEARING
DRAWN KJE 12/4/96 ORDER 439483

THIRD ANGLE PROJECTION
COMPUTER GENERATED

GOULDS PUMPS, INC.
SLURRY PUMP DIVISION ASHLAND, PA.

DRAWING 439483-2
REV 0

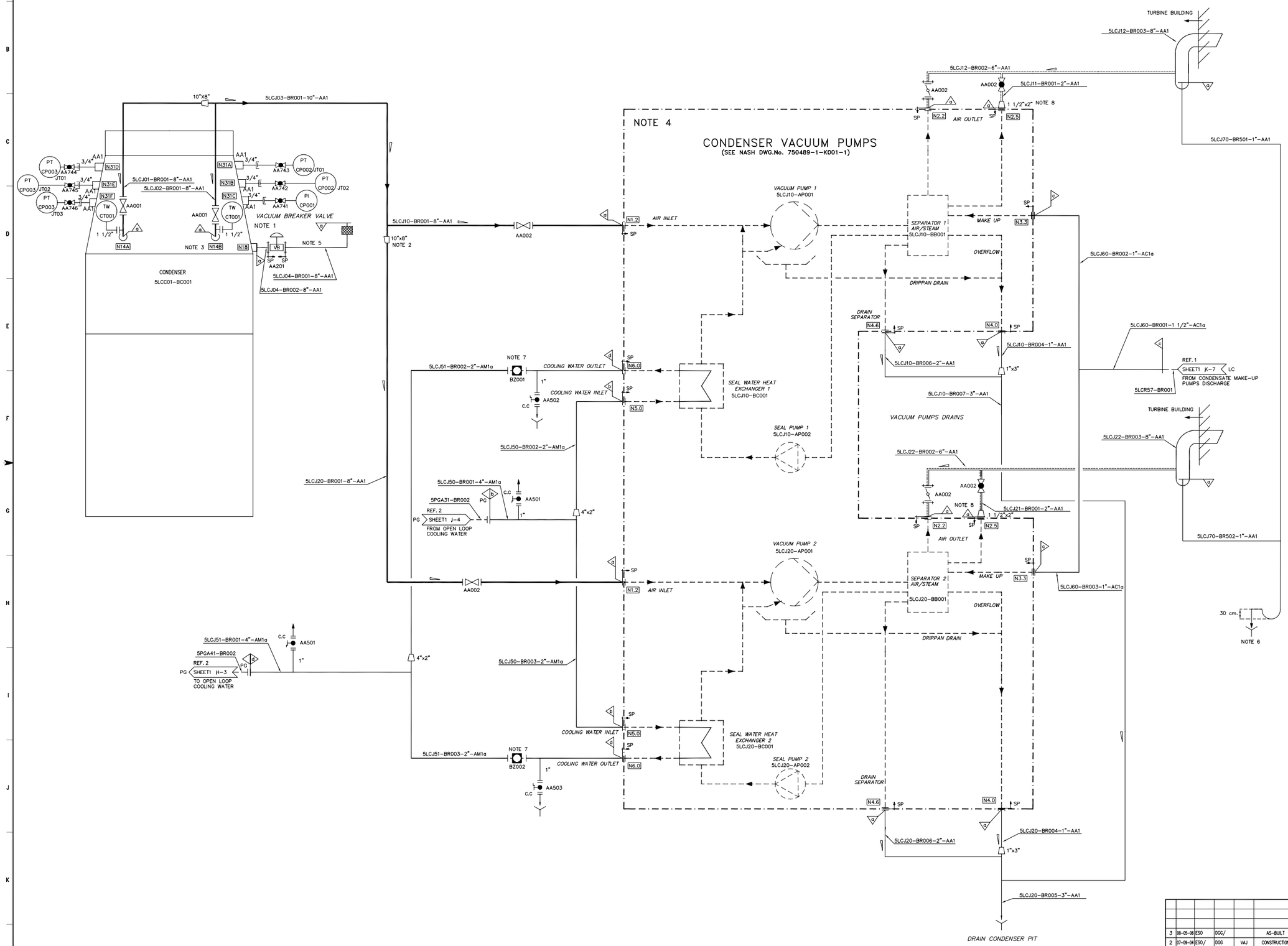

REFERENCE DRAWINGS

		CODE	DRAWING Nº
1.–	P&ID CONDENSATE SYSTEM	LC	413-5-DT-M-10400
2.–	P&ID COOLING WATER SYSTEM	PG	413-5-DT-M-12200

NOTES :

1.– VACUUM BREAKER SUPPLIED BY CONDENSER MANUFACTURER.
2.– ECCENTRIC REDUCER.
3.– N*** ARE CONDENSER CONNECTIONS.
4.– N*** ARE CONDENSER VACUUM SKID CONECTIONS.
5.– THE INLET TO THE VALVE CONSISTS OF AN UPTURNED ELBOW WITH A SCREEN TO PREVENT THE ENTRANCE OF FOREIGN MATTER.
6.– DRAINS LED TO NON-OILY DRAINS NETWORK.
7.– FLOW SIGHTS MOUNTED IN VERTICAL SECTIONS.
8.– IT WILL BE CONNECTED TO FLOW METER VENT IN THE AIR/STEAM SEPARATOR.
9.– SCOPE OF SUPPLY LIMITS: SP (PACKAGE SUPPLY)

INPUTS DATA

1.– P&ID MECHANICAL DWGS. SYMBOLS AND GENERAL NOTES, 413-5-DT-M-00300
2.– MECHANICAL PROJECT CRITERIA, 413-5-R-M-00400
3.– PIPING DATA SHEETS,413-5-R-M-00403
4.– SPECIFICATION FOR THERMAL INSULATION, 413-5-I-M-24900
5.– CONDENSER VACUUM SYSTEM CALCULATIONS REPORT, 413-5-F-M-12400

Branch	DESIGN P barg	DESIGN T °C
a	6/vacuum	76
b	4	30
c	6/vacuum	76
d	4	40

REV.	DATE	PREP.	REVISED	APPRVD.	ISSUED FOR
3	08-05-06	ESO	DGG/		AS-BUILT
2	07-09-04	ESO/	DGG	VAJ	CONSTRUCTION
1	30-03-04	ESO/	DGG	VAJ	DESIGN

Contains information for the design of structures, systems and components..... YES ■ NO □
VERIFICATION: N/A □ HOUSUP. ■ VERIFIER L1 □ L2 □
DOCUMENT PREPARED WITH CAD. DO NOT MODIFY MANUALLY

PUBLIC POWER CORPORATION
LAVRION V CC PP
DMKT 11 21 302

METKA
EMPRESARIOS AGRUPADOS

P&ID
CONDENSER VACUUM SYSTEM

METKA DWG.No.		DIN A0	
KKS DWG.No.	413-5-LCJ-MDD-EA-400	SCALE	--
EA DWG.No.	413-5-DT-M-12400	SHEET 1 OF 1	

413-5-DT-M-12400-001-03

nash_elmo

ELMO-F Vacuum pump

Manufacturer	:	**nash_elmo**
Type	:	**TC 11**
Content	:	**OPERATING INSTRUCTIONS**

nash_elmo

Liquid-Ring Vacuum Pump / Compressor Model SC

Operating Instructions

Two-stage Liquid-Ring Vacuum Pump Series L_800

SC: SC2 ... SC7
SC9 ... SC11

L_800: TCM1 ... TCM3
TC5
TC7
TC11

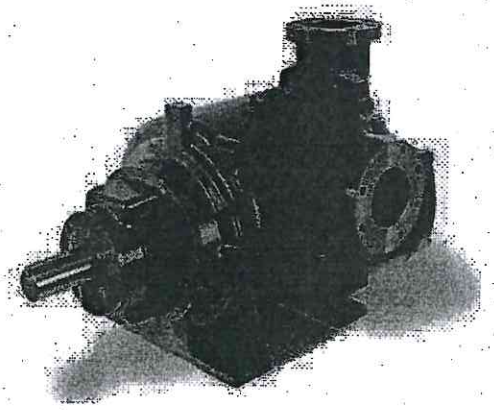

Katzwanger Straße 150
90461 Nürnberg
Germany

Tel.: +49 911 1454 5268
Fax: +49 911 1454 5252
E-Mail: service@nash-elmo.com
Internet: www.nash-elmo.com

Order No.: A1B 4004 EN
Edition 12/2004 SC / L_800
English

Glossary

In these instructions the following technical terms with the specified meaning are used:

Designation:	Definition:
Vacuum pump	Machine for generating a vacuum.
Compressor	Machine for generating a gauge pressure.
Machine	Here: Vacuum pump or compressor. Unit for extracting, transporting and compressing gases and / or vapours, as well as for generating vacuum and gauge pressure. Here the drive is not considered part of the machine.
Pump-motor unit	Unit consisting of a machine and a drive motor.
Machine set	Two or more machines that are interconnected with couplings and mounted on a common base frame.
Driving side, D-end	Side of the machine on which the drive is connected.
Non-driving side, N-end	Side of the machine on which no drive is connected.
Inlet pressure	Pressure of the pumped gases / vapours at the inlet connection of the machine.
Discharge pressure, compression pressure	Pressure of the pumped gases / vapours at the discharge connection of the machine.
Test pressure	Pressure to which the machine is subjected when testing for leaks.
Qualified personnel	Persons who, based on their training, experience and instruction, as well as their knowledge of the pertinent standards, regulations, accident protection regulations and operating conditions, are capable of carrying out certain tasks (e.g. start-up, operation, maintenance, repair) and can recognise and avoid possible dangers in the process. The required knowledge includes a knowledge of first aid and of the on-site emergency equipment. These persons must be authorised by the person responsible for system safety to perform the required tasks.

Contents

1 Safety

1.1 Definitions

To point out dangers and important information, the following signal words and symbols are used in these operating instructions:

1.1.1 Safety alert symbol

The **safety alert symbol** is located in the safety precautions in the highlighted heading field on the left next to the signal word (DANGER, WARNING, CAUTION).

Safety precautions **with** a safety alert symbol indicate a danger of **injuries.**

Be sure to follow these safety precautions to protect against **injuries or death!**

Safety precautions **without** a safety alert symbol indicate a danger of **damage.**

1.1.2 Signal words

DANGER
WARNING
CAUTION
NOTICE
NOTE

The **signal words** are located in the safety precautions in the highlighted heading field.

They follow a certain hierarchy and indicate (in conjunction with the safety alert symbol, see Chapter 1.1.1) the **seriousness of the danger** and the **type of warning.**

See the following explanations:

⚠ DANGER

Danger of injuries.

Indicates an imminently hazardous situation, that **will** result in **death or serious injury** if the corresponding measures are not taken.

⚠ WARNING

Danger of injuries.

Indicates a potentially hazardous situation, that **could** result in **death or serious injury** if the corresponding measures are not taken.

⚠ CAUTION

Danger of injuries.

Indicates a potentially hazardous situation, that may result in **minor or moderate injury** if the corresponding measures are not taken.

CAUTION

Danger of damage.

Indicates a potentially hazardous situation that may result in **property damage** if the corresponding measures are not taken.

NOTICE

Indicates a possible **disadvantage,** i.e. undesirable conditions or consequences can result if the corresponding measures are not taken.

NOTE

Indicates a possible **advantage** if the corresponding measures are taken; tip.

1.2 General safety precautions

⚠ WARNING

Improper use of the machine
Improper use of the machine can result in serious or even fatal injuries!

These operating instructions

- must have been read completely and understood before beginning any work with or at the machine,
- must be strictly observed,
- must be available at the operating location of the machine.

⚠ WARNING

Improper use of the machine
Improper use of the machine can result in serious or even fatal injuries!

This machine may only be operated

- for the purposes indicated under "Intended Use"!
- with the fluids indicated under "Intended Use"!
- with the values indicated under 'Technical Data'!

⚠ WARNING

Improper use of the machine
Improper use of the machine can result in serious or even fatal injuries!

All work on and with the machine (transport, installation, commissioning, shut-down, maintenance, disposal) may only be carried out by trained, reliable qualified personnel!

⚠ WARNING

When working on the machine, there is a danger of injury,
e.g. in the form of cuts / cutting off, crushing, burns and grasping!

During all work on and with the machine (transport, installation, commissioning, shut-down, maintenance, disposal) always wear personal safety equipment (safety helmet, protective gloves, safety boots, hair net)!

⚠ WARNING

Danger due to gauge pressure and vacuum:
sudden escaping of fluid (skin and eye injuries),
sudden pulling in of hair and clothing!

Danger due to escaping fluid:
Burns / scalding!
Slipping and falling!

For inlet and discharge side, as well as for the feed and discharge of operating liquid and sealing liquid the following applies:

Use connections, lines fittings and containers with sufficient freedom from leaks and strength for the resulting pressures.

Before commissioning, following dismantling and assembly, as well as at regular intervals, check the connections of the pipe / hose connections, lines, fittings and containers for strength, leaks and firm seating.
Check connection elements and tighten if necessary.

⚠ WARNING

Danger from rotating parts (impeller, shaft):
Cutting / cutting off of extremities, grabbing / winding up of hair and clothing!

Danger due to gauge pressure and vacuum:
sudden escaping of fluid (skin and eye injuries),
sudden pulling in of hair and clothing!

Danger due to escaping fluid:
Burns / scalding! Slipping and falling!

Before beginning work on the machine or dismantling, carry out the following measures:

- Shut down machine and secure against being switched on again.
- Hang a warning sign on the system controller and on the control elements for the machine:
  "DANGER! Maintenance work on vacuum pump / compressor!
  Do not switch on!"
- Wait for the machine to come to a complete stop.
  Watch run-on time.
- Shut off lines.
  Release pressure.
  Drain off excess liquid.
- Make sure that no gauge pressure or vacuum is present in the lines, tanks etc. to be opened.

Commissioning and operation should only be carried out under the following conditions:

- After completing all work on the machine.
- In the completely mounted state.

In particular:

- With connected lines on inlet and discharge connections.
- With mounted lines and fittings on the connections in the end shield.
  Keep unused connections closed with the sealing devices provided (plugs, covers).

⚠ DANGER

Danger due to gauge pressure and vacuum:

Impermissibly high pressures lead to bursting of parts, abrupt escaping of fluids (skin and eye injuries), and sudden drawing in of hair and clothing!

Extreme danger!

The machine may not be operated with a blocked inlet or discharge side!

Before putting into operation, ensure the following:

- The closures of the inlet and discharge connections used must be removed.
- All pipes must be connected.
- The shut-off device (e.g. valves, gate valves etc.) in the lines must be open.
- The connections and lines may not be or become clogged with deposits or solid materials.
- When feeding fluids containing solid materials, suitable screens or filters must be connected upstream of the machine.

⚠ WARNING

Danger of burns / scalding by hot fluids and by hot surfaces of the machine (shaft bearings)!

Do not touch during operation!
Allow to cool after shut-down!

This especially applies to inlet and pressure lines and the surface of the shaft bearings!

⚠ WARNING

Danger from rotating parts
(exposed shaft ends, drive [drive motor, gear unit, coupling]):

Injuries from rubbing (scrapes, burns),
crushing of extremities,
grasping / winding up of hair and clothing!

For the attachment of the drive (drive motor, gear unit, coupling) and the exposed shaft end, the following applies:

- Rotating parts must be protected against touching.
  Provide safety device (e.g. cover).
- Only start up and operate with safety device mounted.
- Before removing the safety device, wait for the rotating parts to come to a complete stop.
  Watch run-on time.

⚠ WARNING

Openings in bearing bracket / shaft mounting of end shields:

Danger from rotating parts (shaft):
Injuries from rubbing (scrapes, burns),
cutting on shaft shoulders,
grasping / winding up of hair and clothing!

Danger from fluids spraying out:
Skin and eye injuries!

For the openings in the bearing bracket / shaft mounting of the end shields, the following applies:

- Do not look or reach into the openings in the bearing bracket / shaft mounting of the end shields while the machine is running.
- Always only conduct work in this area after the shaft has come to a complete stop.
  Watch run-on time.

⚠ WARNING

Danger of injuries from tilting or falling of the machine or of parts!

Take the following measures:

- The machine must be installed on a level surface.
- The machine must be anchored to the installation surface with the fixing lugs in the feet.
- Check following each removal and remounting whether all mounting elements have been remounted and tightened.
- Only carry out start-up and operation in the completely assembled state.
- Check mounting elements regularly for secure seating.

⚠ CAUTION

Danger of slipping and falling due to escaping liquid!

Before start-up and operation, following removal and remounting as well as at regular intervals:

Check shaft seal for leaks.
If necessary, readjust or replace.

Bind escaped liquid by means of a suitable binding agent and dispose of it.

2 Intended Use

These operating instructions
- applies to liquid-ring vacuum pumps / compressors of the model SC and for liquid-ring vacuum pumps of the Series L_800 (TCM and TC).
- contain instructions bearing on transport and handling, installation, commissioning, operation, shut-down, storage, servicing and disposal,
- must be completely read and understood by all operating and servicing personnel before beginning to work with or on the machine,
- must be strictly observed,
- must be available at the operating location of the machine.

For the operating and service personnel:
- These persons must be trained and authorised for the work to be carried out.
- Work on electrical installations may be carried out by trained and authorised electricians only.

The SC, TCM and TC
- are machines for generating vacuum and gauge pressure.
- are used to extract and transport the following
  pumped gases / vapours:
  - dry and moist gases without dangerous properties.
  - For gases / vapours that differ, an inquiry must be made with the Service Department.
- are designed for operation with the following
  operating liquids:
  - Liquids which are not flammable, explosive, corrosive or toxic; generally water.
  - The operating liquid must be free of solid materials (such as sand).
  - For operating liquids that differ, an inquiry must be made with the Service Department.
- are designed for operation with the following
  sealing liquids:
  - Liquids which are not flammable, explosive, corrosive or toxic, generally water.
  - For sealing liquids that differ, an inquiry must be made with the Service Department.
- exist in the following models:
  - SC, TCM and TC,
- are intended for industrial applications.
- are designed for continuous operation.

When operating, the limits listed in Chapter 3, "Technical Data", pg. 10 et seqq. must always be complied with.

Foreseeable misuse

It is prohibited
- to use the machine in non-industrial applications,
  unless the necessary protection is provided on the system, e.g. guards suitable for children's fingers,
- to use the device in rooms in which explosive gases can occur if the machine is not expressly intended for this purpose;
- to extract, to deliver and to compress explosive, flammable, corrosive or toxic fluids unless the machine is specifically designed for this purpose,
- to operate the machine with values other than those specified in Chapter 3, "Technical Data", pg. 10 et seqq.
- working with or on the machine by unqualified persons.

Any unauthorised modifications of the machine are prohibited for safety reasons.
Maintenance and repair work by the operator are only permitted in the scope described in these operating instructions.
Any maintenance and repair work going beyond this may only be conducted by companies authorised by the manufacturer (inquiry with the Service Department necessary).

3 Technical Data

3.1 Mechanical data

All dimensions are in mm.
All illustrations are non-binding.

Dimensions of vacuum pump / compressor, basic design

SC

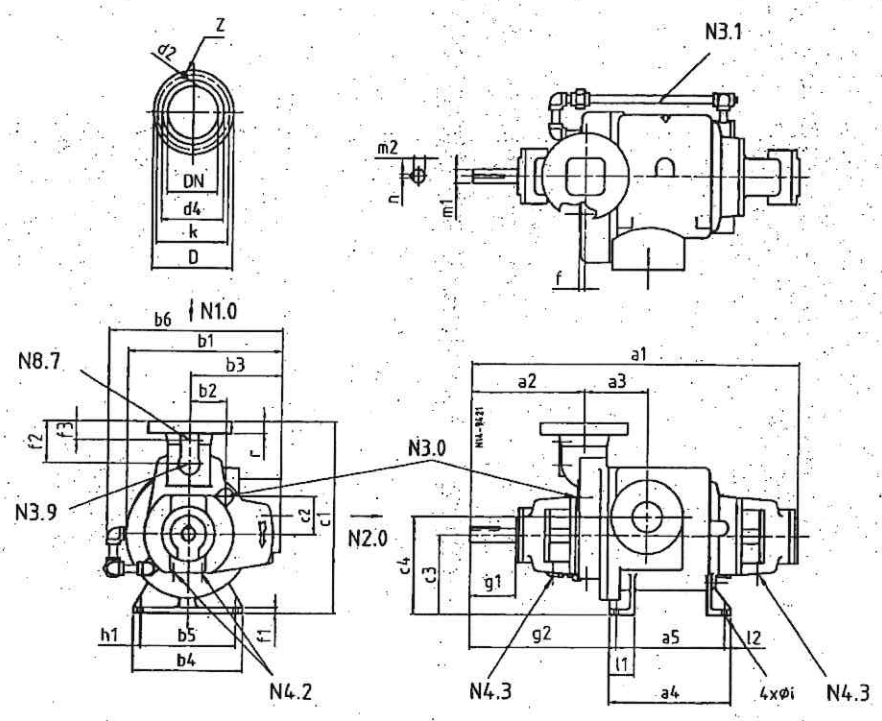

SC2 ... SC5

Fig. 1: Dimensions of SC

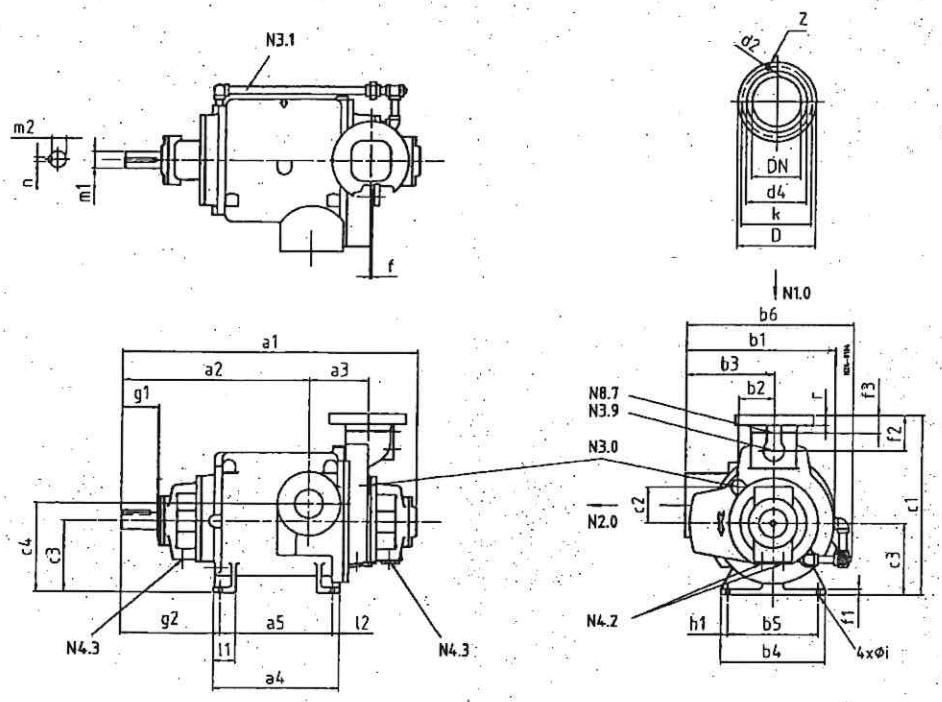

SC6 ... SC7

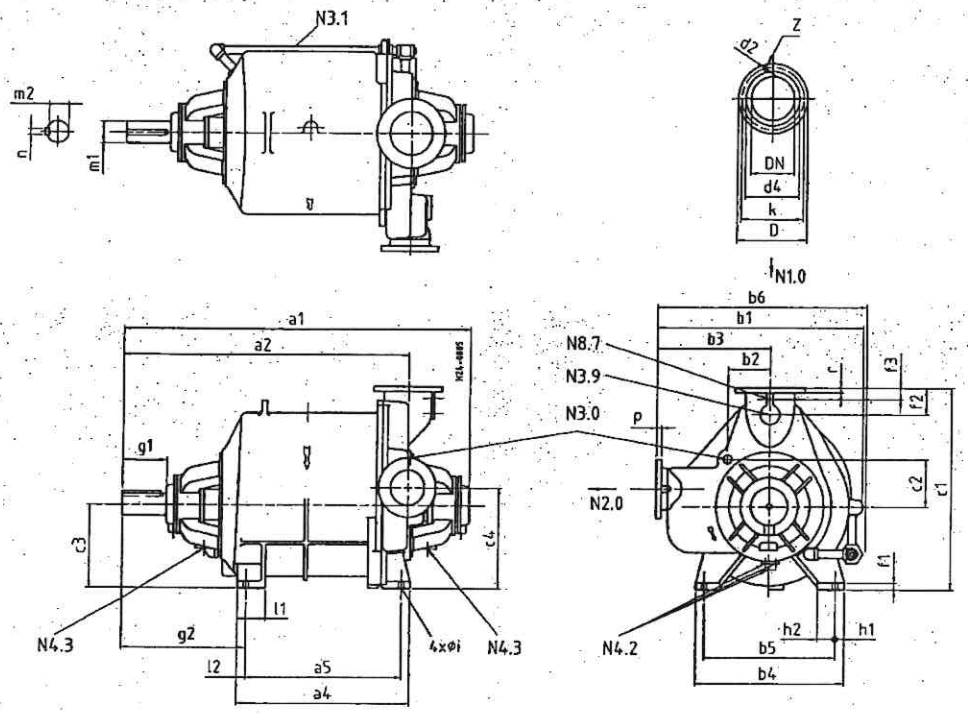

SC9 ... SC11

Fig. 1.1: Dimensions of SC

SC

Connection	
N1.0	Inlet connection flange
N2.0	Discharge connection flange
N3.0	Operating liquid connection
N3.1	Balance line (compressor only)
N3.9	Spray nozzle connection
N4.2	Drain openings
N4.3	Drain for leakage liquid
N8.7	Sealing plug for gauge connection

Dimension	SC2	SC3	SC4	SC5	SC6	SC7	SC9	SC10	SC11
a1	716	899	908	962	1099	1257	1537	1664	2057
a2	254	305	305	305	699	794	1264	1362	1686
a3	137	173	171	171	214	241	-	-	-
a4	254	343	343	343	457	533	749	826	997
a5	216	305	305	305	406	432	648	724	895
b1	337	432	473	473	562	686	927	1054	1226
b2	89	103	113	113	130	149	181	235	248
b3	197	254	279	279	330	400	533	597	686
b4	229	305	305	305	381	457	660	749	876
b5	184	266	266	266	330	382	558	648	774
b6	381	489	552	552	616	737	943	1073	1229
c1	406	521	533	533	645	787	876	1003	1168
c2	81	103	113	113	130	178	210	213	273
c3	165	216	216	216	257	330	356	406	483
c4	203	267	267	267	321	419	432	483	584
f	19	14	12.7	12.7	6	22	5	6	16
f1	13	16	16	16	19	25	32	32	38
f2	92	114	83	83	127	152	156	156	156
f3	o.r.	o.r.	o.r.	o.r.	o.r.	o.r.	92	92	67
g1	95	121	121	121	140	159	203	210	273
g2	327	395	394	394	381	451	572	619	759
h1	22	19	19	19	25	38	51	51	51
h2	-	-	-	-	-	-	121	127	152
i	4 x 19	4 x 19	4 x 19	4 x 19	4 x 19	4 x 25	4 x 32	4 x 32	4 x 32
l1	57	70	70	70	83	127	127	152	165
l2	19	19	19	19	25	51	51	51	51
m1	32	38	40	40	60	75	76.2	95.25	127
m2	27	33	35	35	53	67.5	66.7	85.75	111.1
n	10	10	12	12	18	20	19.1	19.1	31.8
p	o.r.	o.r.	o.r.	o.r.	o.r.	o.r.	25	25	29
r	29	32	32	32	37	37	29	29	30

SC

Connection	Dimension	SC2	SC3	SC4	SC5	SC6	SC7	SC9	SC10	SC11
N1.0		PN10	PN10	PN10	PN10	PN10	PN10	ANSI Class 125 (inch) NPS		
	DN	80	100	100	100	150	150	8	8	10
	d2	18	18	18	18	22	22	7/8	7/8	1
	d4	138	158	158	158	212	212	10 5/8	10 5/8	12 ¾
	D	200	220	220	220	285	285	13 ½	13 ½	16
	k	160	180	180	180	240	240	11 ¾	11 ¾	14 ¼
	z	8	8	8	8	8	8	8	8	12
		SC2 ... SC7 suitable for flanges acc. to EN 1092-2, for material of combination F (stainless steel): flanges with raised face, EN 1092-1, form B								
N2.0		PN10	PN10	PN10	PN10	PN10	PN10	ANSI Class 125 (inch) NPS		
	DN	50	80	80	80	100	150	6 IN	6 IN	8 IN
	d2	18	18	18	18	18	22	7/8	7/8	7 / 8
	d4	102	138	138	138	158	212	8 ½	8 ½	10 5/8
	D	165	200	200	200	220	285	11	11	13 ½
	k	125	160	160	160	180	240	9 ½	9 ½	11 ¾
	z	4	8	8	8	8	8	8	8	8
		SC2 ... SC7 suitable for flanges acc. to EN 1092-2, for material of combination F (stainless steel): flanges with raised face, EN 1092-1, form B								
N3.0		Rp ½	Rp ¾	Rp ¾	Rp ¾	Rp 1	Rp 1	Rp 1½	Rp 1½	Rp 2
N3.9		Rp ½	Rp 1	Rp 1	Rp 1	Rp 1½	Rp 1½	Rp 2	Rp 2	Rp 2
N4.2		Rp ½	Rp ½	Rp ½	Rp ½	Rp ½	Rp ½	Rp ½	Rp ½	Rp ½
N4.3		Rp ½	Rp ½	Rp ½	Rp ½	Rp ½	Rp ½	Rp 1	Rp 1	Rp 1
N8.7		Rp ½	Rp ½	Rp ½	Rp ½	Rp ½	Rp ½	Rp ½	Rp ½	Rp ½

Dimensions two-stage vacuum pump, basic design

TCM / TC

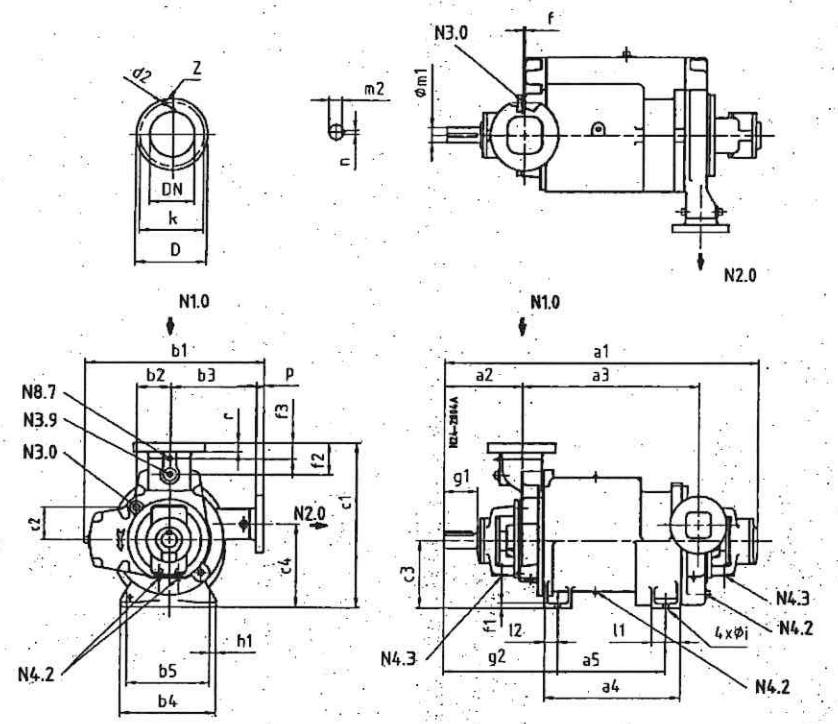

TCM1 ... TC7

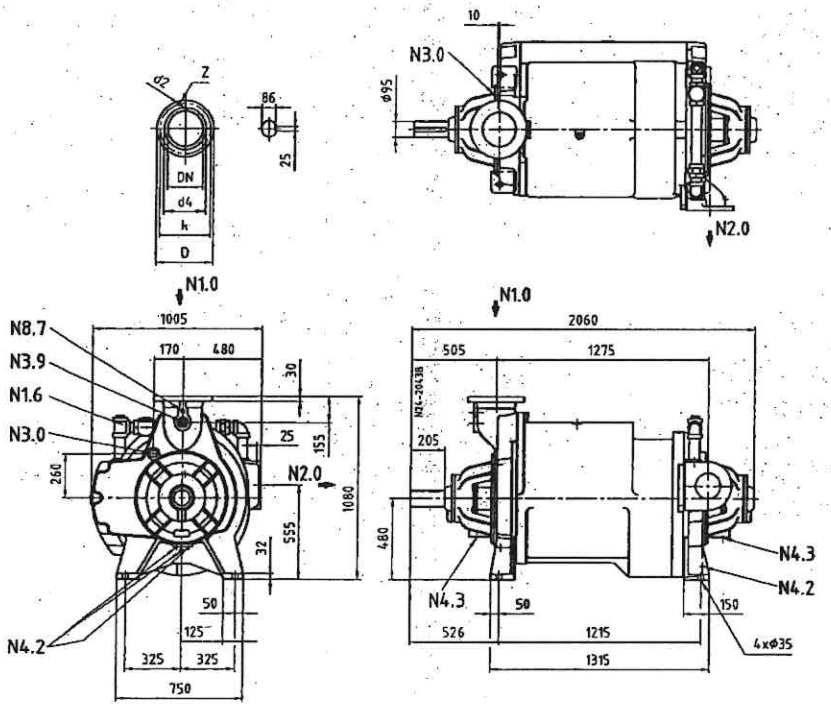

TC11

Fig. 2: Dimensions of TCM / TC

TCM / TC

Connection	
N1.0	Inlet connection flange
N1.6	Hogging booster piping
N2.0	Discharge connection flange
N3.0	Operating liquid connection
N3.9	Spray nozzle connection
N4.2	Drain opening
N4.3	Drain for leakage liquid
N8.7	Sealing plug for gauge connection

Dimension	TCM1	TCM2	TCM3	TC5	TC7	TC11
a1	791	937	981	1022	1283	2060
a2	264	321	321	305	316	505
a3	356	419	464	518	722	1275
a4	254	324	372	394	552	1315
a5	216	230	270	305	438	1215
b1	397	435	435	572	720	1005
b2	98	110	110	113	130	170
b3	216	240	240	318	387	480
b4	229	251	251	305	380	750
b5	184	210	210	266	330	650
c1	394	451	451	559	654	1080
c2	75	100	100	113	130	260
c3	165	200	200	241	267	480
c4	203	230	230	292	330	555
F	33	30	30	13	6	10
f1	13	16	16	16	19	32
f2	83	90	90	83	127	155
f3	o.r.	o.r.	o.r.	o.r.	63.5	o.r.
g1	95	127	127	121	133	205
g2	327	418	418	418	470	526
h1	22	21	21	19	25	50
h2	-	-	-	-	-	125
i	4 x 19	4 x 19	4 x 19	4 x 19	4 x 22	4 x 35
l1	57	100	100	89	114	150
l2	19	51	51	48	57	50
m1	32	40	40	40	60	95
m2	27	35	35	35	53	86
n	10	12	12	12	18	25
p	20	21	21	29	32	25
r	20	21	21	32	37	30

TCM / TC

Connection	Dimension	TCM1	TCM2	TCM3	TC5	TC7	TC11
N1.0		PN10	PN10	PN10	PN10	PN10	PN10
	DN	50	50	50	100	150	200
	d2	18	18	18	18	22	22
	d4	-	-	-	-	-	268
	D	165	165	165	220	285	340
	k	125	125	125	180	240	295
	z	4	4	4	8	8	8
		suitable for flanges acc. to EN 1092-2, for material of combination F (stainless steel): flanges with raised face, EN 1092-1, form B					
N2.0		PN10	PN10	PN10	PN10	PN10	PN10
	DN	50	50	50	80	100	150
	d2	18	18	18	18	18	22
	d4	-	-	-	-	-	212
	D	165	165	165	200	220	285
	k	125	125	125	160	180	240
	z	4	4	4	8	8	8
		suitable for flanges acc. to EN 1092-2, for material of combination F (stainless steel): flanges with raised face, EN 1092-1, form B					
N3.0		Rp ¾	Rp ¾	Rp ¾	Rp ¾	Rp 1	Rp 1½
N3.9		Rp ¾	Rp ¾	Rp ¾	Rp 1	Rp 1½	Rp 2
N4.2		Rp ½	Rp ½	Rp ½	Rp ½	Rp ½	Rp ½
N4.3		Rp ½	Rp ½	Rp ½	Rp ½	Rp ½	Rp 1
N8.7		Rp ½	Rp ½	Rp ½	Rp ½	Rp ½	Rp ½

Noise level

⚠ CAUTION

Danger from noise emissions!

The machines are generally approved for a broad range of installation and operating conditions. These conditions have a major influence on the noise emissions, e.g.:

- Foundation rigid or vibration-isolated,
- Drive connected directly or via a gear unit,
- Type, insulation and routing of the connection lines,
- Compression and speed ratios.

The actual noise values at the workplace can only be measured locally on the assembled machines taking all these factors into account. If the values measured locally exceed the maximum permissible values, they must be reduced with suitable measures:

- By changing the installation and operating conditions,
- With noise insulation.

Sound level of vacuum pumps

Type	Test speed in min^{-1}	Sound level in dB(A)
SC2	1750	76
SC3	1170	82
SC4	1170	78
SC5	1170	81
SC6	1170	84
SC7	705	84
SC9	780	83
SC10	500	84
SC11	450	85
Two-stage vacuum pumps		
TCM1	1750	79.6
TCM2	1470	85
TCM3	1470	85
TC5	1170	80
TC7	980	83
TC11	590	90

Table 1

Sound level of compressors

Type	Test speed in min^{-1}	Sound level in dB(A)
SC2	1750	73
SC3	1170	74
SC4	1170	80
SC5	1170	83
SC6	1170	86
SC7	980	85
SC9	590	86
SC10	500	88
SC11	450	90

Table 2

Note:

All sound data do only consider the noise emission from the liquid ring vacuum pump or compressor but not the noise radiated from connecting pipes. The noise emission values declared have been obtained to the noise test code of EN ISO 2151 and the referenced boundary conditions of EN ISO 3746 or EN ISO 9614 (i.e. appropriate acoustic environment).

The given noise data (A-weighted sound power level L_{WA} or the A-weighted emission sound pressure level L_{pA}) do strictly apply for regular operation within the specified ranges plus a tolerance of $K_{WA} = K_{PA} = +3$ dB regarding the measurement uncertainty of reproducibility conditions and the uncertainty of production.

Weight

Weight of vacuum pumps

Type	Material	Weight in kg
SC2	Grey cast iron	111
	Ductile iron	112
	Stainless steel	121
	Combination	114
SC3	Grey cast iron	205
	Ductile iron	208
	Stainless steel	223
	Combination	213
SC4	Grey cast iron	213
	Ductile iron	217
	Stainless steel	233
	Combination	222
SC5	Grey cast iron	243
	Ductile iron	247
	Stainless steel	264
	Combination	253
SC6	Grey cast iron	415
	Ductile iron	422
	Stainless steel	451
	Combination	432
	+ Bronze	425
SC7	Grey cast iron	658
	Ductile iron	668
	Stainless steel	716
	Combination	684
	+ Bronze	672
SC9	Stainless steel	1112
SC10	Stainless steel	1600
SC11	Stainless steel	2939
Two-stage vacuum pumps		
TCM1	Ductile iron	127
	Stainless steel	134
TCM2	Ductile iron	184
	Stainless steel	197
TCM3	Ductile iron	209
	Stainless steel	225
TC5	Ductile iron	308
	Stainless steel	334
TC7	Ductile iron	499
	Stainless steel	544
TC11	Grey cast iron	2126
	Ductile iron	2159
	Stainless steel	2313

Table 3

Weight of compressors

Type	Material	Weight in kg
SC2	Grey cast iron	120
	Ductile iron	122
	Stainless steel	130
	Combination	123
SC3	Grey cast iron	214
	Ductile iron	217
	Stainless steel	232
	Combination	222
SC4	Grey cast iron	222
	Ductile Iron	226
	Stainless steel	242
	Combination	231
SC5	Grey cast iron	252
	Ductile iron	256
	Stainless steel	273
	Combination	262
SC6	Grey cast iron	425
	Ductile iron	431
	Stainless steel	460
	Combination	441
	+ Bronze	435
SC7	Grey cast iron	667
	Ductile iron	677
	Stainless steel	725
	Combination	693
	+ Bronze	682
SC9	Stainless steel	1128
SC10	Stainless steel	1620
SC11	Stainless steel	2962

Table 4

Speeds

Speed range of SC

Type	Speed range in min^{-1}			
	Vacuum pump		Compressor	
SC2	1450	2100	1450	2500
SC3	980	1600	1170	1750
SC4	1170	1450	1170	1750
SC5	1170	1450	1170	1750
SC6	820	1170	885	1170
SC7	705	930	705	980
SC9	470	780	590	830
SC10	450	640	450	705
SC11	360	530	375	590

Table 5

Speed range of TCM / TC

Type	Speed range in min^{-1}	
	Vacuum pump	
TCM1	1470	2100
TCM2	1170	1750
TCM3	1170	1750
TC5	980	1450
TC7	890	1170
TC11	450	590

Table 6

3.2 Operating conditions

Pumped gases / vapours

Type	Dry and moist gases without dangerous properties	
Inlet temperature	min. 0 °C max. 80 °C	(min. 32 °F) (max. 176 °F)
Inlet pressure	min. 33 mbar abs.	(min. 0.48 psia)
Discharge pressure	max. 1 013 mbar abs. In case of higher values, it is necessary to enquire with nash_elmo Sales.	(max. 14.7 psia)

Operating liquid

Type	See Chapter 4.3, "Operating liquid", pg. 23.		
Temperature	Nominal value: Limit:	+15 °C min. 0 °C max. 60 °C	(60 °F) (min. 32 °F) (max. 140 °F)
Volumetric flow	See Table 7, pg. 23.		

Sealing liquid

Type	See Chapter 4.4, "Sealing liquid", pg. 24.		
Temperature	Nominal value: Limits:	+15 °C min. 0 °C max. 65 °C or max. boiling point -10 K whichever value is lower	(60 °F) (min. 32 °F) (max. 149 °F)
Volumetric flow (to each mechanical seal)	SC2, TCM1: SC3 ... SC11: TCM2 ... TC11 :	0.06 m³/h 0.12 m³/h 0.12 m³/h	
Pressure (to each mechanical seal)		690 ... 1380 mbar over the discharge pressure	

Ambient conditions

Ambient temperature	≤ 40 °C	(≤ 104 °F)
Relative humidity	< 80 %	
	nearly neutral (e.g. no solvent vapours, no salty air, no sandy or dusty air)	

4 Description of the maschine

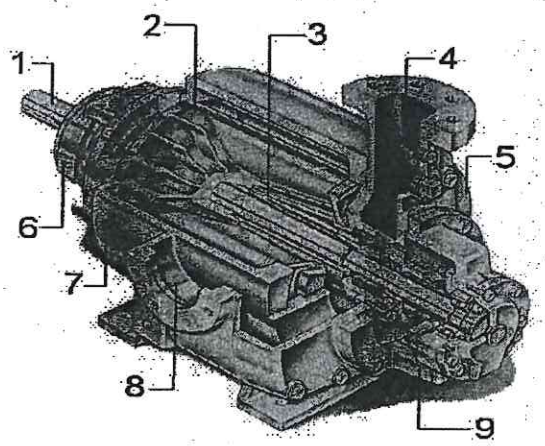

1 Shaft
2 Impeller
3 Cone
4 Inlet
5 End shield
6 Outer bearing cap
7 Housing
8 Outlet
9 Outer bearing cap

Fig. 3: Functional modules of the types SC

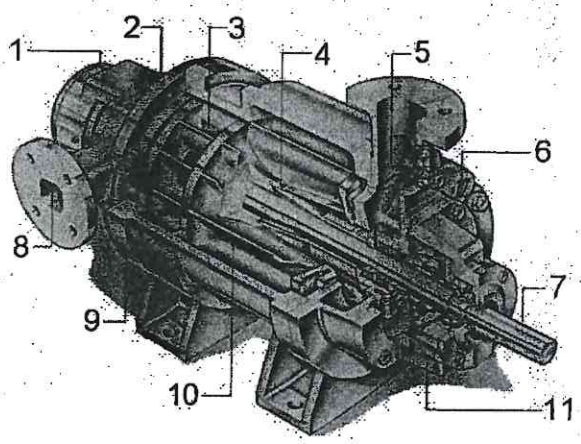

1 Outer bearing cap
2 End shield
3 Impeller 2nd stage
4 Cone
5 Inlet
6 End shield
7 Shaft
8 Outlet
9 Housing
10 Impeller 1st stage
11 Outer bearing cap

Fig. 4: Functional modules of the types TCM / TC

4.1 Design

The SC are liquid-ring vacuum pumps / compressors and the L_800 (TCM / TC) are two-stage liquid-ring vacuum pumps. They are supplied with a drive.
The most important modules of the SC are shown in Fig. 3, pg. 21.
The most important modules of the L_800 (TCM / TC) are shown in Fig. 4, pg. 21.

4.2 Operating method

The impeller is driven by an external motor via the shaft. It is located in a working chamber consisting of a housing and end shields.
The operating liquid, which serves as the sealing liquid, is fed into the working chamber in the housing via an operating liquid connection through the end shield and the cone.

The processes described are enabled by the fact that the impeller is seated eccentrically in the housing. The rotation of the liquid in the machine has compressing effect on the gas in the machine. In addition, the operating liquid also acts as a sealing liquid and prevents gas from escaping into the atmosphere (see Fig. 5, pg. 22).

Two-stage design:

The gas enters the 1st stage through the cone inlet port. It is precompressed to the interstage pressure and leaves the 1st stage through the internal manifold which leads to the 2nd stage of the pump. In the 2nd stage the gas is compressed to the discharge pressure and exits through the cone discharge port (see Fig. 6, pg. 22).

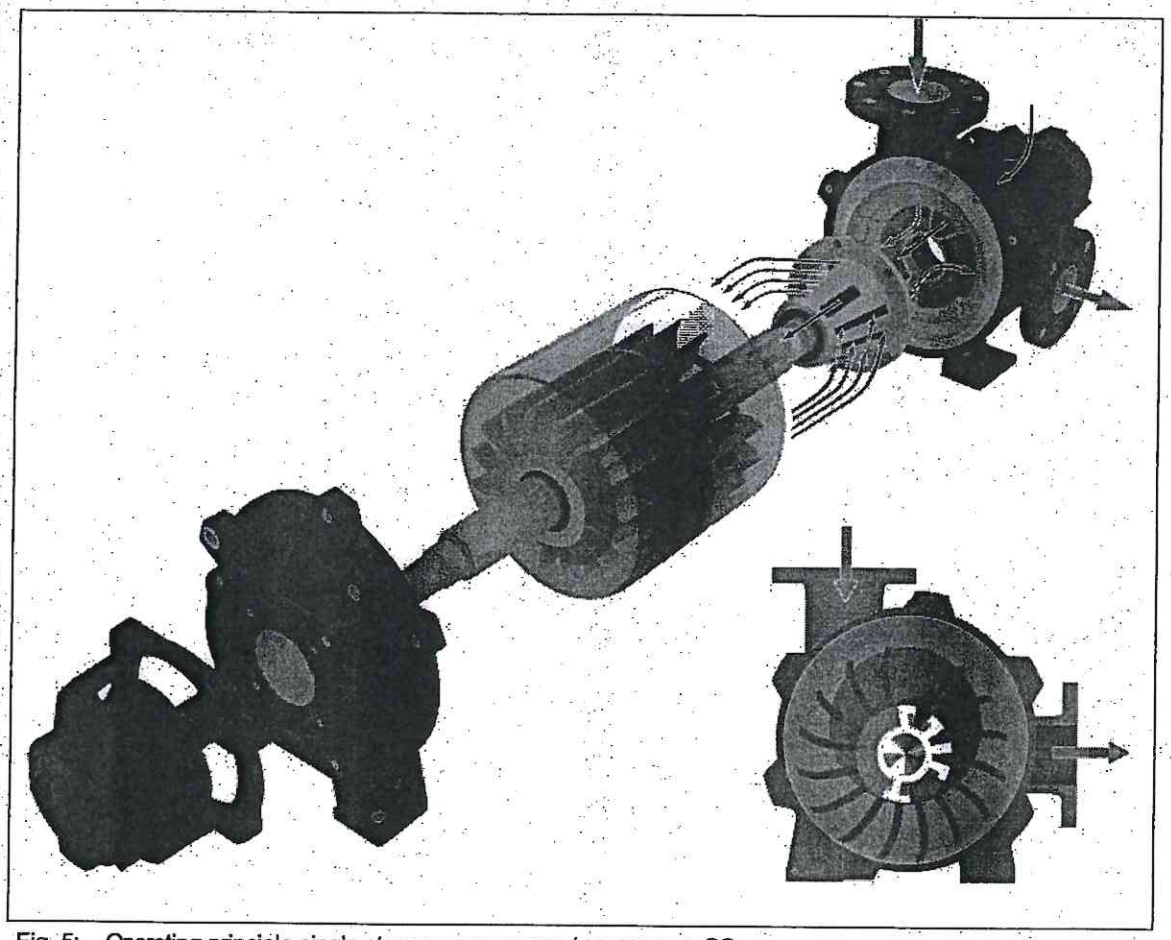

Fig. 5: Operating principle single-stage vacuum pump / compressor SC

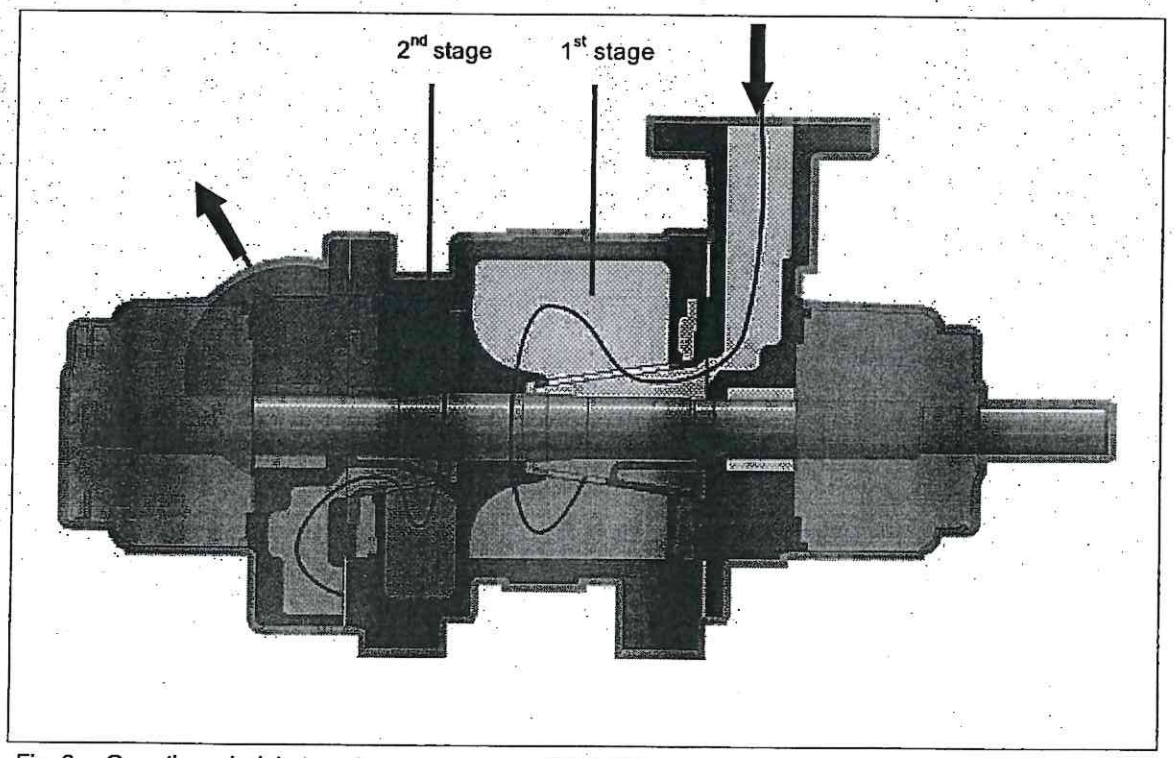

Fig. 6: Operating principle two-stage vacuum pump TCM / TC

4.3 Operating liquid

For the vacuum pump:

The lines must be resistant to the respective operating liquids. The operating liquid is usually fresh water with a temperature of 15 °C (60 °F). The permissible liquid streams to the machine are listed in Table 7, pg. 23. Differences in the liquid flow rate of ± 25 % are not harmful to the machine, however larger differences in the liquid flow rate can alter the machine performance.

For the compressor:

The operating liquid flow rate should be approx. 1,25 l/min per kW. The operating liquid streams apply both to steel and stainless steel machines.

Permissible operating liquid streams (vacuum pump)

Type	Operating liquid flow rate m³/h for inlet pressure of		
	Speed min^{-1}	1013 - 166 mbar abs.	166 - 33 mbar abs.
SC2	1450	0.3	0.7
	1750	0.3	0.7
	2100	0.7	0.7
SC2 St.steel	all	0.7	1.4
SC3	980	0.9	1.8
	1170	0.9	1.8
	1450	0.9	1.8
	1600	1.8	1.8
SC4	all	1.1	2.3
SC5	all	1.1	2.3
SC6	all	1.6	3.2
SC7	all	2.7	4.1
SC9	all	3.7	9.1
SC10	all	4.6	13.6
SC11	all	6.8	17.0

Type	Operating liquid flow rate m³/h for inlet pressure of	
	Speed min^{-1}	1013 - 33 mbar abs.
TCM1	1470	0.9
	1600	0.9
	1750	1.1
	2100	1.8
TCM2	1170	1.1
	1320	1.8
	1470	2.3
	1620	2.3
	1750	2.7
TCM3	1170	1.4
	1320	1.8
	1470	2.7
	1620	2.7
	1750	3.2
TC5	1170	3.4
	1320	4.1
	1470	4.8
TC7	890	3.4
	980	4.6
	1170	5.7
TC11	450	8.0
	500	10.2
	550	10.2
	590	10.2

Table 7

Convertion:

m³/h = 16.7 l/min = 4.4 US gpm

CAUTION

The operating liquid must flow before the drive motor of the machine is started, even when the machine is only started to check the rotating direction.

4.3.1 Tasks

The operating liquid has the following tasks:

- formation of the liquid ring (machine operating principle),
- sealing off the gap between the impeller and the cone,
- cooling.

4.3.2 Properties

The following can be used as an operating liquid:

- liquids that are not flammable, explosive, aggressive or toxic,
- generally water.

The operating liquid must be free of solid materials (such as sand), as otherwise heavy wearing of the machine will occur.
If impurities occur, suitable filters or sieves must be connected upstream of the machine.
No abrasive / erosive substances > 10 µm may get into the machine.
Maximum permissible solid quantity: 200 ppm.
If limy operating liquid is used (danger of lime deposits), suitable measures must be taken, e.g. addition of water softener or installation of an ion exchanger.

CAUTION

Danger of subsequent damage in case of calcification!

Hard lime layers can break open over time and separate. This can cause damage to components.

Take measures for the continuous prevention of lime deposits or for regular removal of lime deposits.

4.3.3 Feed and discharge

The operating liquid is fed in via the **operating liquid port** and is output together with the gases / vapours via the **discharge connection.** Therefore, the new, cool operating liquid must be continuously fed to the machine.
(For the location of the operating liquid port, please see Fig. 1, pg. 10 to Fig. 2: connection N3.0).

⚠ WARNING

Danger of environmental damage!

If the operating liquid is harmful to the environment, it may not be drained off into the open. In this case it must be routed in a circuit with forced circulation.

4.4 Sealing liquid (shaft seal)

4.4.1 Tasks

The sealing liquid has the following tasks:

- sealing off the shaft seals,
- cooling,
- lubricating the sliding surfaces.

4.4.2 Properties

The following can be used as a sealing liquid:

- liquids that are not flammable, explosive, aggressive or toxic,
- generally water.

The sealing liquid must be free of solid materials (such as sand), as otherwise heavy wearing of the machine will occur. If impurities occur, suitable filters or sieves must be connected upstream of the machine.

No abrasive / erosive substances > 10 µm may get into the machine.
Maximum permissible solid quantity: 200 ppm.

It must be thermally suitable (boiling point at least 10 K above operating temperature).

If limy sealing liquid is used (danger of lime deposits), suitable measures must be taken, e.g. addition of water softener or installation of an ion exchanger.

It must be matched to the materials used and the fluids to be used.

CAUTION

Danger of subsequent damage in case of calcification!

Hard lime layers can break open over time and separate. This can cause damage to components.

Take measures for the continuous prevention of lime deposits or for regular removal of lime deposits.

4.4.3 Feed and discharge

Depending on the type and design of the shaft seal, flushing with the sealing liquid can be carried out in various ways:

- With mechanical seals:
  - with internal sealant supply
  - with external sealant supply
- With stuffing boxes:
  - with internal liquid wetting
  - with external liquid feed (external sealant supply)

Depending on this, the feed and discharge of the sealing liquid are also carried out in various ways.

WARNING

Danger of environmental damage!

If the sealing liquid is harmful to the environment, it may not be drained off into the open. In this case it must be routed in a circuit with forced circulation.

5 Transport and Handling

⚠ WARNING

Danger from lifting heavy loads!

For the machine weight, see Chapter 3.1, "Mechanical data", Section "Weight", pg. 18.

Use lifting gear or transport equipment suitable for the transport!

⚠ WARNING

Danger from tipping or falling loads!

Prior to transport and handling make sure that all components are securely assembled and secure or remove all components the fasteners of which have been loosened!

When transporting, observe the following basic rules:

- Use suitable lifting gear (e.g. belts or ropes / cables) and transport equipment (e.g. forklift truck, low-lift platform truck, crane).
- The lifting capacity of lifting equipment and lifting gear must be at least equal to the machine's weight.
  For the machine weight, see Chapter 3.1, "Mechanical data", Section "Weight", pg. 18.
- The machine must be secured so that it cannot tip or fall.
- Do not stand or walk under suspended loads!

Transport with a crane and lifting belts, with forklift truck or with low-lift platform truck.

Secure lifting belts as shown in Fig. 25, pg. 68
Watch the following:

- The lifting belts must be sufficiently long (spread angle smaller than 90°).
- The lifting belts must be protected against damage (e.g. by rubbing through on edges). Use lifting belts with a rugged edge protection.
- The lifting belts must be attached at suitable attachment points (see Fig. 25, pg. 68).
  Suitable attachment points are, for example:
  - The bearing housings,
  - The upper inlet connection,
  - Openings and lifting pins on base plates.

⚠ WARNING

Never secure the lifting belt to the following points:

- Shaft end,
- Attached individual components or fittings,
- Attachment points of individual components,
  as these are only designed for the separate transport of the individual component.

- The lifting belts must be routed (e.g. in undercuts) so that the machine cannot slip out or tip (see Fig. 25, pg. 68).
- Make sure that no damage is caused to any attached fittings.

6 Installation

6.1 Connection variants

Depending on the design and the requirements of the system, various connections of the machine with additional components are possible (e.g. with valves, gate valves, pressure gauge, volume flow meter, liquid separator).

See following examples:

Connection with separator, check valves and feed pipe for sealing liquid, Fig. 7, pg. 27.

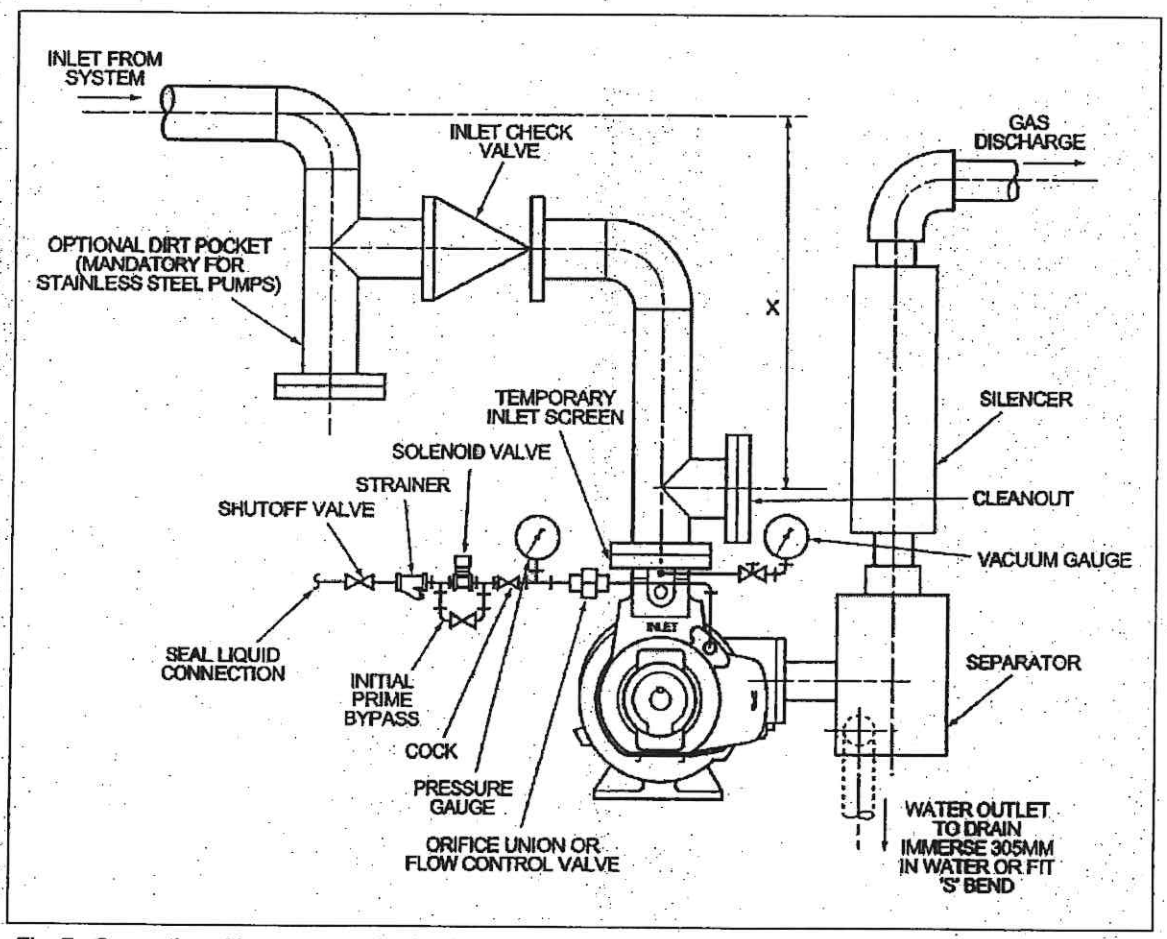

Fig. 7: Connection with separator, check valves and feed pipe for sealing liquid

6.2 Installation

⚠ WARNING

Danger of injuries from tilting or falling of the machine!

Take the following measures:

- The machine must be installed on a level surface.
- The machine must be anchored to the installation surface with the fixing lugs in the feet.

Install the machine as follows:

- on level surfaces,
- with shaft in horizontal position,
- with feet facing downward (corresponding design IM B3 for drive motors),
- on supports that are parallel to each other and lie on one plane,
- with sufficient distance to walls and other objects so that the end shields and bearings are easily accessible for inspection and maintenance.

6.2.1 Installing on base frame

The machines and drive elements (drive motor, gear unit, coupling) can be mounted together on one base frame.
The base frame usually has a torsionally rigid design.

The base frame is mounted on either a **foundation** or a **steel structure**.

CAUTION

Danger of damage to the machine and the drive elements!

If the base frame is placed on an uneven foundation or an uneven steel structure, it will become distorted. It takes on the contour of the existing surface. It is then no longer possible to properly align the machines and drive elements. This can lead to damage.

Installing on a foundation:

Proceed as follows:

- Measure out foundation.
  When doing so, the inaccuracies of the foundation are determined based on a horizontal plane.
  For this purpose a levelling device, a hose level, a laser alignment device etc. can be used.
- Compensate for uneven spots.
  When doing so, the determined inaccuracies must be compensated using shims (e.g. metal plates) so that a level contact surface results.
- Mount base frame,
  depending on condition on delivery either separately or with machine mounted.
- Grout base frame with foundation concrete.
- If necessary, (with base frame in box form) also pour *out* base frame with foundation concrete.
  (Observe specifications of base frame manufacturer.)

NOTICE

Normal concrete shrinks during hardening and is therefore not suitable for underpouring the base frame!

Use only foundation concrete!

- Set foundation concrete and allow to harden.
- Secure the base frame with anchor bolts or stone bolts.
- If the machine and base frame have been delivered separately
  (i.e. the machine was not premounted on the base frame):
  - Place the machine on the base frame.
  - If the machine does not stand evenly on all four feet:
    Compensate the remaining distance between the foot and base frame. Use suitable shims (e.g. metal plates) to do this. The remaining gap may be a maximum of 0.5 mm (0.02 inch).
  - Screw the machine feet to the base frame.

Installation on a steel structure:

Proceed as follows:

- Measure out contact surfaces on the steel structure.
  When doing so, the inaccuracies of the contact surfaces are determined based on a horizontal plane.
  For this purpose a levelling device, a hose level, a laser alignment device etc. can be used.

Compensate for uneven spots.
When doing so, the determined inaccuracies must be compensated using shims (e.g. metal plates).

- Mount base frame,
  depending on condition on delivery
  either separately or with machine mounted.
- Secure base frame with anchor bolts.
- If the machine and base frame have been delivered separately
  (i.e. the machine was not premounted on the base frame):
  - Place the machine on the base frame.
  - If the machine does not stand evenly on all four feet:
    Compensate the remaining distance between the foot and base frame. Use suitable shims (e.g. metal plates) to do this. The remaining gap may be a maximum of 0.5 mm (0.02 inch).
  - Screw the machine feet to the base frame.

6.3 Drive (drive motor, gear unit, coupling)

Drive type:

The required type of drive is dependent from the speed with which the machine is to be run. This means the selected drive must reach the required speed.

At high speeds:

- directly connected drive motors
  with the required speed range.

At low speeds:

- gear unit
  (toothed gear unit or V-belt gear unit)
  with the necessary gear ratio,
- controllable drives.

Speed:

For the speed range of the machine, see Chapter 3.1, „Mechanical data", Table 5, pg. 19 and Table 6, pg.19.

Drive elements:

For the drive elements the following applies:
To prevent damage (warping of the housing, rough running of and damage to the bearings), the machines and drive elements must be carefully aligned.
See Chapter 6.2, „Installation", pg. 28.

Couplings:

The coupling must be carefully aligned to prevent coupling damage and rough running.

Belt gear units:

The belt tension must be carefully adjusted and regularly verified according to the manufacturer's specifications.

WARNING

Danger of bearing damage from excessively high belt tension.

Danger of damage to the belt if belt pulley axes are not parallel.

Make sure that the grease nipple remains accessible. If necessary, mount a suitable pipe (grease line) on the grease nipple. This enables grease to be fed to the grease nipple even over a certain distance.

Shaft bearings:

Bearing load, radial (belt pretension):

Particularly with a drive via a belt gear unit, high radial forces can act on the shaft end. The radial forces and the length of the shaft end form a lever arm. To keep this as low as possible, the belt pulley must be mounted as close as possible to the machine bearing. This reduces bearing load and shaft deflection.

⚠ WARNING

Danger from rotating parts (exposed shaft ends, drive [drive motor, gear unit, coupling]):

Injuries from rubbing (scrapes, burns), crushing of extremities, grasping / winding up of hair and clothing!

For the attachment of the drive (drive motor, gear unit, coupling) and the exposed shaft end, the following applies:

Rotating parts must be protected against touching.
Provide safety device (e.g. cover).

6.4 Connection: general information

6.4.1 Requirements for pipes and pipe connections

Observe the following when connecting the pipes:

- The materials, dimensions and properties of the pipes, fittings, connection elements and seals must be matched to the conditions of the system or the process, and in particular to:
  - Temperatures
  - Pressures,
  - Types and properties of the fluids.
- If in doubt, it is advisable to enquire with nash_elmo Service.

NOTE

Expansion joints are flexible pipe and hose pieces of fibrous material.

They are mounted between the connections of the machine and the pipe.

They are used to absorb forces, torques and vibrations.

6.5 Connecting pipes / hoses

6.5.1 Operating liquid port

The operating liquid connection is located in the upper area of the N-end shield.
See Fig. 1, pg. 10 to Fig. 2: connection N3.0.
Connect the feed pipe for the operating liquid here.

Procedure:

- Remove closure from operating-liquid port.
- Attach pipe with pipe thread to operating liquid connection.

The operating liquid is drained off via the discharge connection.
See Fig. 1, pg. 10 to Fig. 2: connection N2.0.

Monitoring operating liquid

For this purpose we recommend installing the following additional components:

- Volume flow meter (dependent on direction of flow) or pressure gauge
- Shut-off fitting

  During automatic operation, it is advisable to use a **solenoid valve (dependent on motor current)** in addition to the shut-off fitting.
  During interruptions in operation, the solenoid valve then closes, while the setting of the shut-off fitting (i.e. the valve position or the opened valve cross-section) is not changed.

6.5.2 Sealing liquid connection

6.5.2.1 With stuffing boxes

The connection for the feed pipe of the sealing liquid is located on the D-end for SC9 ... SC11 on the side and for TC5 ... TC11 on top of the end shield; on the N-end for SC on the side and for TCM / TC on the bottom of the end shield (Fig. 8 and Fig. 9, pg. 31).

Carry out the connection as follows:

On model with internal liquid wetting (only permissible for SC2 ... SC7 and TCM1 ... TCM3):

- Make sure that the connection for the feed pipe of the sealing liquid is sealed with a plug.

On model with external liquid feed (external sealant supply / SC9 ... SC11 and TC5 ... TC11):

- Mount the feed pipe of the sealing liquid on the connection provided.

Monitoring sealing liquid

... on model with internal liquid wetting:
Not necessary.

... on model with external liquid feed (external sealant supply):
In this case we recommend installing the following components in each feed pipe for sealing liquid:

- Volume flow meter (dependent on direction of flow) or pressure gauge
- Shut-off fitting

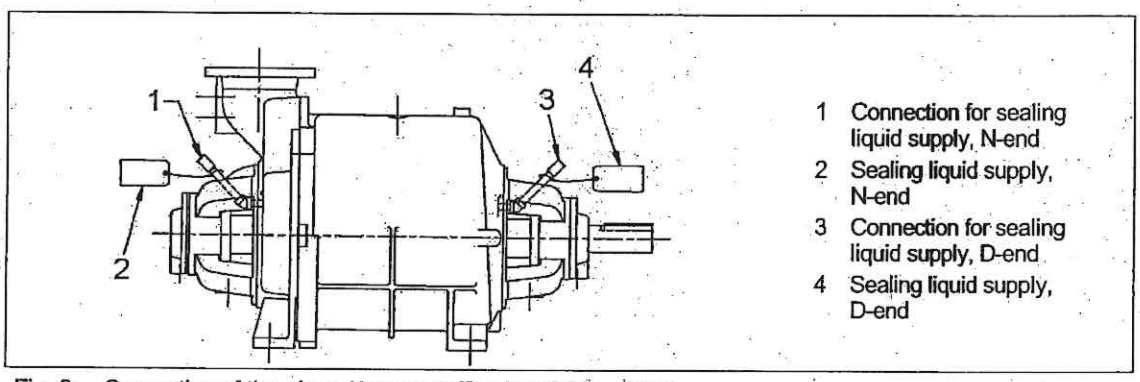

Fig. 8: Connection of the pipes / hoses: stuffing box SC9 ... SC11

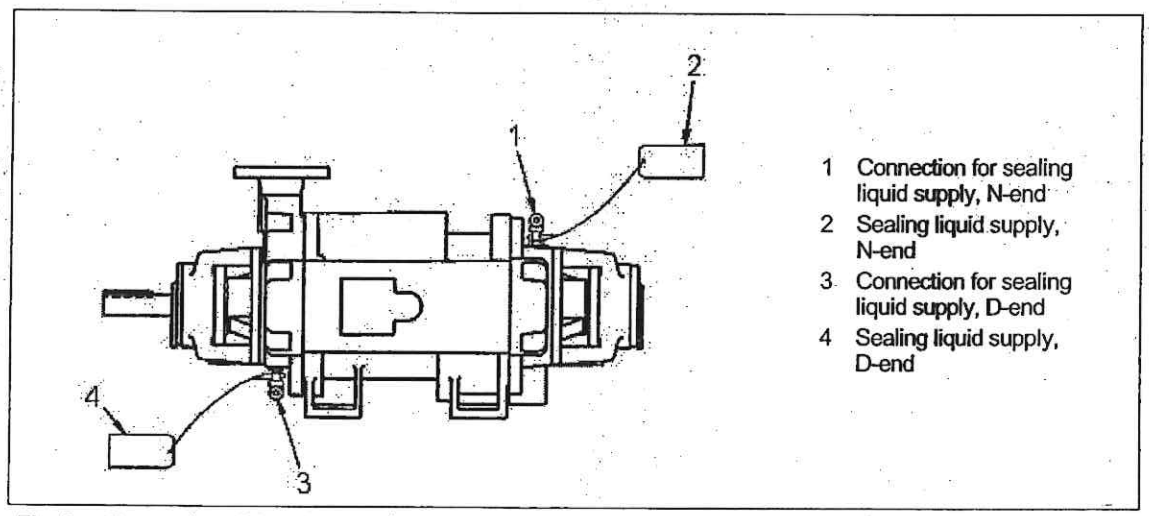

Fig. 9: Connection of the pipes / hoses: stuffing box TC5 ... TC11

6.5.2.2 With mechanical seals

Carry out the connection as follows:

- **With mechanical seal, single-acting, with external sealant supply:**
  Fig. 10, pg. 32.
- **With mechanical seal, double-acting, with external sealant supply:**
  Fig. 11, pg. 32.

  With this variant the sealing liquid is either taken from the feed pipe of the fresh operating liquid or from another, separate source.

  To do this, connect the feed pipe of the sealing liquid to the corresponding connection (5) on the seal housing.

Monitoring sealing liquid

We recommend installing the following components in each feed pipe for sealing liquid:

- Volume flow meter (dependent on direction of flow) or pressure gauge
- Shut-off fitting

6.5.3 Connection for draining and flushing

If necessary, one drain pipe with a valve can be connected to the each of the connections for draining (see Fig. 1, pg. 10 to Fig. 2: connections N4.2).

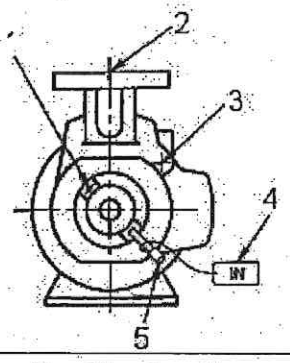

1 Drain plug (on both sides)
2 Inlet connection
3 Operating-liquid port
4 Sealing liquid supply
5 Connection for sealing liquid supply

Fig. 10: Connection of the pipes / hoses: mechanical seal, single-acting

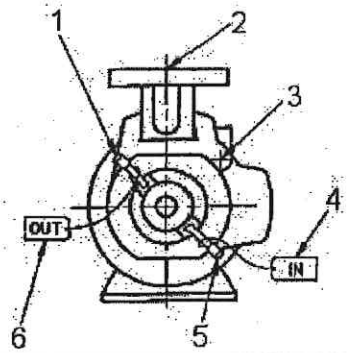

1 Connection for sealing liquid drain
2 Inlet connection
3 Operating-liquid port
4 Sealing liquid supply
5 Connection for sealing liquid supply
6 Sealing liquid drain

Fig. 11: Connection of the pipes / hoses: mechanical seal, double-acting

6.5.4 Lobe purge connection for SC

During the flushing process, operating liquid is redirected to the pressure sided flange and reentered into the operating liquid flow.
Please connect as follows: Fig. 12, pg. 33 to Fig. 14.

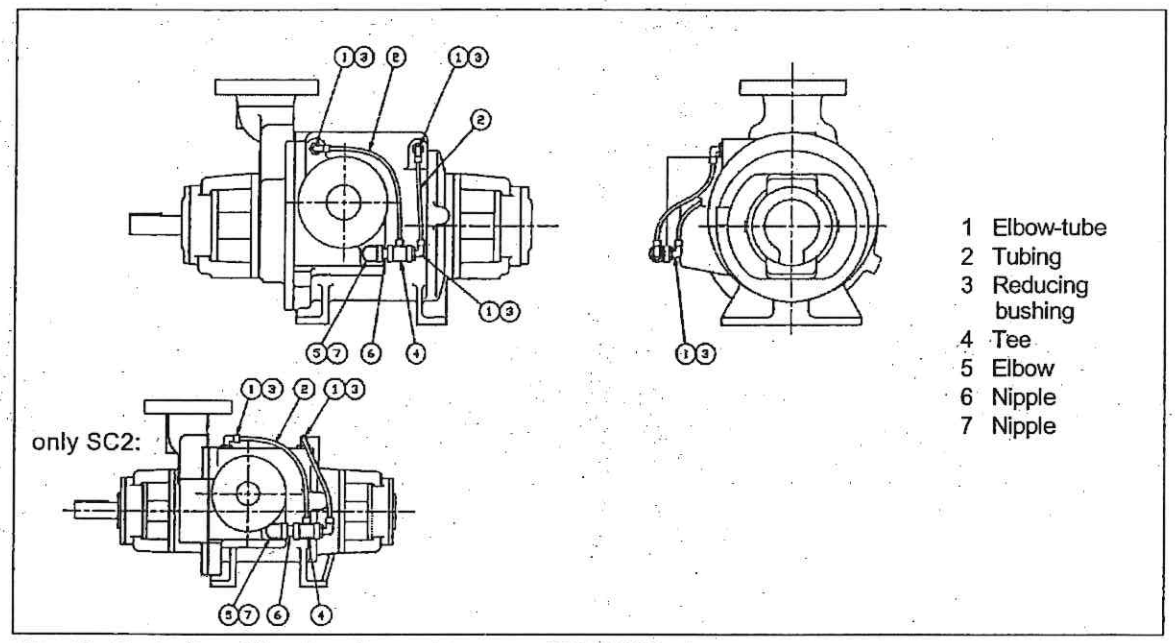

Fig. 12: Connection of the pipes / hoses: lobe purge SC2 ... SC5

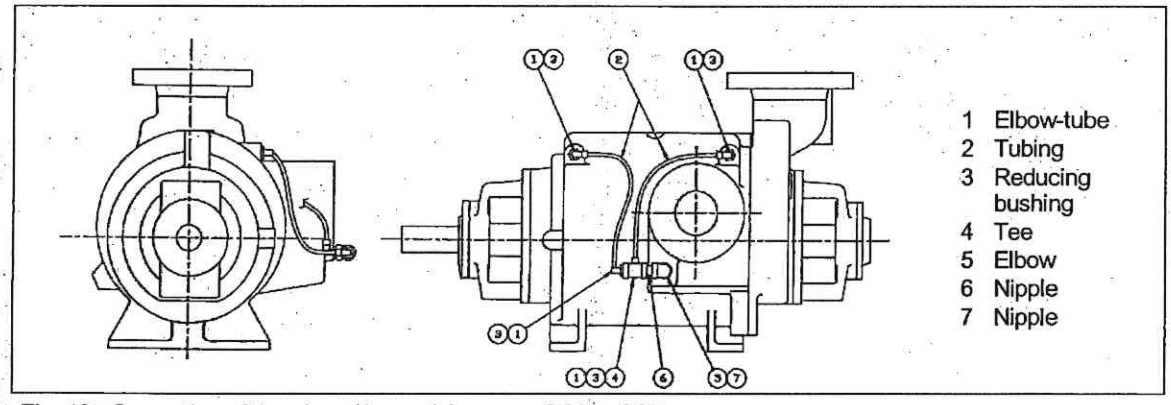

Fig. 13: Connection of the pipes / hoses: lobe purge SC6 ... SC7

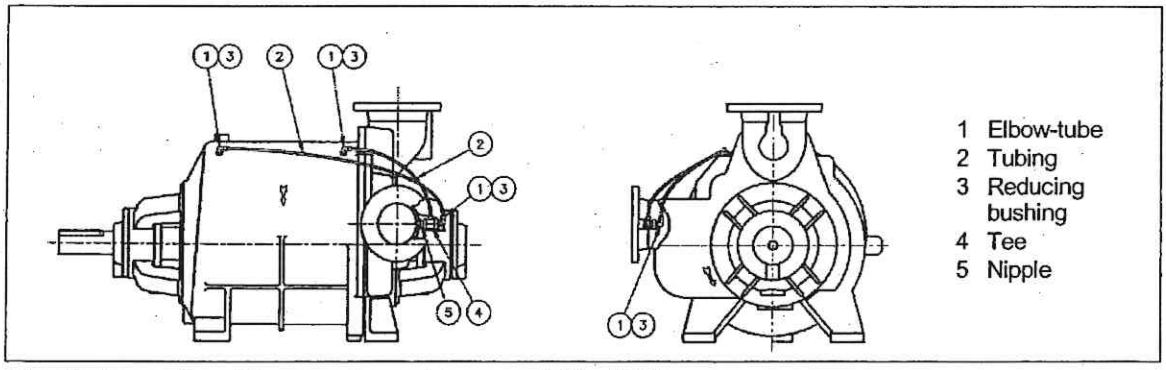

Fig. 14: Connection of the pipes / hoses: lobe purge SC9 ... SC11

6.5.5 Notes

Backflow of fluids:

If a backflow of the pumped gases / vapours and operating liquid out of the machine is to be prevented during interruptions in operation, a non-return fitting **with the lowest possible flow resistance** must be installed in the inlet pipe.

Hot or dangerous fluids:

Special attention must be paid to the following cases:

- Machines that transport hot gases / vapours at over 60 °C (140 °F)
- Machines that are operated with dangerous (flammable, caustic, toxic) gases / vapours, operating liquids or sealing liquids - in such cases, be sure to ask your nash_elmo contract partner
- Machines that must be drained at temperatures over 60 °C (140 °F)

In these cases the following measures must be taken:

- Provide all connections for draining with shut-off fittings.
- Provide a closed system for discharging the pumped gases / vapours and / or the operating liquid.

High pressures:

If system malfunctions can lead to impermissibly high pressures in the machine (for limits, see Chapter 3.2, "Operating conditions", Section "Pumped gases / vapours", pg. 20), the machine can be damaged.
In this case suitable measures must be taken on the system to protect the machine, e.g. a pressure-dependent shut-off fitting and switching off of the machine.

6.6 Final measures

After installation is completed, the following measures must be carried out:

- **Machine and drive elements:**
  Make sure that machine and drive elements (drive motor, gear unit, coupling) are properly aligned and mounted.

- **Gear units:**
  Make sure that the gear units are properly adjusted depending on the type and are mounted free of axially thrust (e.g. belt pretension with belt drive, radial and axial alignment of couplings).

- **Impeller:**
  Make sure that the machine impeller can be rotated without scraping against the housing.

- **Bearings:**
  Make sure that the machine bearings are sufficiently lubricated.
  If the time from delivery to commissioning exceeds the following periods, the shaft bearings must be relubricated:
  - Under favourable conditions (storage in dry, dust and vibration-free rooms):
    4 years
  - Under unfavourable conditions (e.g. high humidity, salty air, sandy or dusty air):
    2 years.

- **Drive motor:**
  Make sure that the drive motor is properly selected and connected
  (correct output, speed, rotating direction).

CAUTION

Danger of damage to shaft seals!

The rotating direction for the interconnected machine and drive motor may only be checked under the following conditions:

- The operating liquid level in the machine housing must be properly adjusted.
- With stuffing boxes with external liquid feed (external sealant supply) or with mechanical seals with external sealant supply:
  The sealing liquid valves must be opened briefly.

See Chapter 7.1, "Preparations for commissioning", pg. 36.

- **Mounting and connection elements:**
  Make sure that all mounting and connection elements are firmly tightened.

- **Rotating parts:**
  Make sure that rotating parts are properly protected against touching (e.g. with covers, safety distances as per EN 294).

- **Pipes:**
  Thoroughly clean all pipes (especially on inlet side),
  as no foreign bodies (e.g. welding beads, scale, flaked-off rust) may get into the machine.

- **Pipes and fittings:**
  Make sure that the pipes and fittings are properly arranged in accordance with the system installation diagram, are mounted free of mechanical tension and have been pressure-tested.

- **Liquid separator:**
  Make sure that any installed liquid separator has the proper installation height and the specified fittings.

⚠ WARNING

Improper operation can lead to malfunctions!

Malfunction can result in serious damage and injuries!

Depending on the connection variant and system conditions, it may be necessary to add to the above list of final measures!

Observe instructions for additional components and for the entire system!

7 Commissioning / Operation

⚠ WARNING

Danger from rotating parts (impeller, shaft):
Cutting / cutting off of extremities, grabbing / winding up of hair and clothing!

Danger due to gauge pressure and vacuum:
sudden escaping of fluid (skin and eye injuries),
sudden pulling in of hair and clothing!

Danger due to escaping fluid:
Burns / scalding!
Slipping and falling!

Commissioning and operation should only be carried out under the following conditions:

- In the completely mounted state.

In particular:

- With connected lines on inlet and discharge connections.
  Keep unused connections closed with blind flanges.
- With mounted lines and fittings on the connections in the end shield.
  Keep unused connections closed with the sealing devices provided (plugs, covers).

⚠ DANGER

Danger due to gauge pressure and vacuum:

Impermissibly high pressures lead to bursting of parts, abrupt escaping of fluids (skin and eye injuries), and sudden drawing in of hair and clothing!

Extreme danger!

The machine may not be operated with a blocked inlet or discharge side!

Before putting into operation, ensure the following:

- The closures of the inlet and discharge connections used must be removed.
- All pipes must be connected.
- The shut-off device (e.g. valves, gate valves etc.) in the lines must be open.
- The connections and lines may not be or become clogged with deposits or solid materials.
- When feeding fluids containing solid materials, suitable screens or filters must be connected upstream of the machine.

7.1 Preparations for commissioning

NOTE

To protect against premature rusting of the inner components, the machine is filled with water-soluble anticorrosive agent.
Before commissioning, drain off the anticorrosive agent and flush with fresh water.

Before starting the machine, carry out the following preparatory measures:

- Make sure that all voltage sources to drive are insulated and disconnected, and are secured with signs to prevent accidental starting.
- Set up sufficiently large catch container below end shields of machine.
- Remove plug for complete draining (see Fig. 1, pg. 10 to Fig. 2: connections N4.2) on end shields.
- Flush the machine with water until only clear water flows out of all drain openings.

⚠ CAUTION

Danger of slipping and falling due to escaping liquid!

Provide suitable catch container when draining anticorrosive agent.

⚠ WARNING

Danger of environmental damage!

Dispose of the caught anticorrosive agent and the water mixed with it according to the applicable national and / or local regulations.

NOTE

Machines operated with **operating liquids which are not water-compatible** must be thoroughly **dried** after flushing.

- After completely draining and, if necessary, drying machine:
  Remount plug (see Fig. 1, pg. 11 to Fig. 2: connections N4.2) with pipe-thread sealing compound.
- Check machine to ensure that all drain plugs are properly fitted.
- Fill machine manually with operating liquid first time until operating liquid flows out of overflow.
- Check all pipes to ensure that connections to machine and its supply system are properly installed.
- Check whether machine and drive mounting screws, as well as base and bottom plate screws are firmly tightened.
- Check all other operating component connections connected to machine to make sure that they comply with respective manufacturer's recommendations.
- Check all machine control elements (control valves, measuring devices etc.) to make sure that they have been attached in accordance with installation drawings. Make sure that these element are installed in the piping scheme with the proper orientation to ensure their proper operation.
- Check the inlet connection of the machine to ensure that the sieve on the inlet connection and the flushing connections have been carefully cleaned and are free of tools, equipment and chips.
- Make sure that the operating liquid connection is free of soiling.
- Remove the coupling or the V-belt guard and turn the shaft by hand in the rotating direction indicated with the arrow on the housing and shown in the installation drawing.
  The shaft must turn freely. If the shaft is jammed and cannot be turned free by hand, it is necessary to enquire with nash_elmo Service.

⚠ CAUTION

Improper use of the machine
Improper use of the machine can result in serious or even fatal injuries!

Never attempt to release a jammed shaft using the drive motor. This can result in serious damage.

- Check coupling or V-belt alignment.
- Prepare machine as described above and open main valves.
  Briefly start motor and check correctness of machine rotating direction.

CAUTION

Never operate the machine without sufficient operating liquid and a sufficient stream of sealing liquid.

A high operating liquid pressure does not necessarily result in a sufficiently high flow rate.

⚠ WARNING

Danger of injury in the form of grasping / winding parts of the body / clothing!

Provide the coupling or the V-belt drive with a guard before starting the drive motor.

The following section applies when the machine is drained or dry (i.e. during commissioning or restarting after longer breaks in operation or repairs).

Proceed as follows:

- Initial technical status:
  All lines for pumped gases / vapours are correctly connected.
  All shut-off fittings are closed.
  No shut-off or non-return fittings are to be installed on the discharge side.
- Pour in operating liquid and adjust operating liquid level:
  - Open shut-off fitting for operating liquid. Depending on machine size, this must take place approx. 0,5 to 2 minutes before start-up.
  - The working area of the machine fills up to the overflow level at the discharge connection.
  - IMPORTANT:
    During start-up the operating liquid level in the working space of the machine may not be higher than the shaft centre!

    With connection variants that differ from the one described here, suitable measures must be taken to ensure this.

CAUTION

Danger of damage to shaft!

If too much liquid is located in the machine interior, the pressure on the shaft is too high so that damage can occur during start-up.
During start-up the operating liquid level in the working space of the machine may not be higher than the shaft centre!

Take the following measures:

- Carry out or repeat the adjustment of the operating liquid level in the working space of the machine directly prior to start-up.
- Make sure that no major additional quantities of liquid (operating liquid or sealing liquid) collect in the working space of the machine between the preparations for commissioning and start-up!

NOTE

Contact nash_elmo Service for support when starting up.

- Shaft seal:
  - **With stuffing box with internal liquid wetting:**

    Measures for commissioning new machines:
    Prior to delivery a test run is conducted with each machine at the factory. During this the stuffing boxes are adjusted. During commissioning: Tighten stuffing box packings. To do this, tighten each stuffing box gland by one screw rotation.

    Measures for restarting machines that have already been operated:
    Adjust stuffing boxes.
  - **With stuffing box with external liquid feed (external sealant supply):**

    Open shut-off fitting for sealing liquid to moisten the stuffing box packings. Steady leakage (45 - 60 drops / min) from stuffing box is required. This dripping is necessary to ensure lubrication of packing, and therefore prevent scoring and burning in on shaft.

CAUTION

At a feed pressure of > 0.3 bar (> 4.35 psi) above discharge pressure, liquid spray can escape.

Danger of damage to machine by escaping liquid spray!

The feed pressure of the sealing liquid may not exceed 0.3 mbar (4.35 psi) above the discharge pressure!

- **With mechanical seal, single-acting, with external sealant supply:**

  Open shut-off fitting for sealing liquid, i.e. **shortly before** the machine is actually started up.

  This prevents both the mechanical seal from running dry and
  the liquid level in the machine from becoming too high.

  Adjust volumetric flow or feed pressure of sealing liquid.
  For information on the volumetric flow or feed pressure of the sealing liquid, see Chapter 3.2, "Operating conditions", Section "Sealing liquid", pg. 20. In the process, check the values using the volume flow meter or the pressure gauge.

CAUTION

Running dry of the machine will cause the mechanical seal to be destroyed within a matter of seconds!

DO NOT put into operation as long as the sealing space is not filled with sealing liquid, not even briefly (e.g. to check the rotating direction)!

If necessary, bleed sealing space!

CAUTION

An incorrect feed pressure of the sealing liquid can lead to faults and damage!

If the feed pressure is too low:

- Sealing off is insufficient so that fluids can enter into the sealing space and into the surrounding area.
- The mechanical seal may be damaged.

If the feed pressure is too high:

- Wearing of the mechanical seal is extreme.

Make sure that the feed pressure of the sealing liquid is always properly adjusted!

7.2 Operating test

Once the preparations for commissioning and the tests prior to commissioning have been completed, start the machine and check operation.

7.3 Start-up

⚠ WARNING

Improper use of the machine
Improper use of the machine can result in serious or even fatal injuries!

If you check the machine in a system, inform the persons working with / at the system at the plant before the machine goes into operation. This particularly applies when commissioning the machine. An uninspected start / up of the system can increase dangers for the persons working with / at the system.

NOTE

If malfunctions occur when carrzing out the following steps, refer to Chapter 9, "Troubleshooting", pg. 44

Once the preparations for commissioning and tests prior to commissioning have been completed, start the machine and check operation as follows:

- Check the machine and the system for sufficient operating liquid and then open the most important feed pipes from the operating liquid and sealing liquid to the machine and to the heat exchanger (if used).
- Check the sealing-liquid flow rate to the machine while the machine is set to the required vacuum. Make sure that the sealing liquid flows out of the liquid separator or its outlet on the silencer.

NOTE

If the machine runs roughly, the vibration level increases and the volumetric flow decreases. If the machine does not stabilise, switch off the system immediately and determine the cause.

- Continuously check the temperature of the housing during start-up. If the temperature quickly increases or it is 22 K or more above the operating liquid temperature, immediately switch off the machine and determine the cause.
- After starting the machine, check the temperature of the bearing brackets until the bearing bracket temperature is stable for at least 30 minutes.

⚠ CAUTION

Improper use of the machine
Improper use of the machine can result in serious or even fatal injuries!

If the bearing bracket temperature is 28 K (50°F) or more above the housing temperature, immediately switch off the machine and determine the cause.

CAUTION

In case of unusual bearing noises, vibrations, odours or smoke, switch off the machine immediately and determine the cause.

7.4 Shut-down

Proceed as follows:

- Switch off drive motor.

⚠ WARNING

Improper use of the machine
Improper use of the machine can result in serious or even fatal injuries!

The operating-liquid feed valve must be closed when the machine is not running.

- Close shut-off fitting for operating liquid.
  If a solenoid valve is concerned, this valve closes automatically when the voltage is cut off.
- Close the intake valve as soon as the machine has stopped turning.
- Shaft seals:
  Shut off sealing liquid:
  - **With stuffing box with external liquid feed (external sealant supply):**

    Close shut-off fitting for sealing liquid.
  - **With mechanical seal, single-acting, with external sealant supply:**

    Close shut-off fitting for sealing liquid, i.e. **shortly after** the machine has been switched off.

    This prevents both the mechanical seal from running dry and
    the liquid level in the machine from becoming too high.
- Close shut-off fitting in inlet pipe.
- Before conducting further measures, wait until the machine and drive elements (drive motor, gear unit, coupling) have come to a complete stop.

If there is a danger of frost:

- Also drain liquid out of machine, liquid separators and pipes.
- With mechanical seal completely drain liquid out of all seal housings!
- See Chapter 8.2, "Draining", pg. 42.

If a longer period is to be expected until the system is started up again:

- Take measures for a longer standstill. See Chapter 8.4, "Longer stillstand", pg. 42.

8 Shutting Down and Longer Standstill

⚠ WARNING

Danger from rotating parts (impeller, shaft):
Cutting / cutting off of extremities,
grabbing / winding up of hair and clothing!

Danger due to gauge pressure and vacuum:
sudden escaping of fluid (skin and eye injuries),
sudden pulling in of hair and clothing!

Danger due to escaping fluid:
Burns / scalding! Slipping and falling!

Before beginning work on the machine or dismantling, carry out the following measures:

- Shut down machine and secure against being switched on again.
- Hang a warning sign on the system controller and on the control elements for the machine:
  "DANGER! Maintenance work on vacuum pump / compressor!
  Do not switch on!"
- Wait for the machine to come to a complete stop.
  Watch run-on time.
- Shut off lines.
  Release pressure.
  Drain off excess liquid.
- Make sure that no gauge pressure or vacuum is present in the lines, tanks etc. to be opened.

In particular, do not remove the following components until after the machine has come to a complete stop, the lines have been shut-off and the pressure has been released:

- The lines and blind flanges on the inlet and discharge connections.
- The lines, fittings and closures (plugs, covers) on the connections in the end shield.

8.1 Shutting down and securing machine

Proceed as follows:

- Shut down machine as described in Chapter 7.4, "Shut-down", pg. 40.
- Make sure that the drive motor is electrically deenergized.
  Secure against being switched on again.
- Hang a warning sign on the system controller and on the control elements for the machine:
  "DANGER! Maintenance work on vacuum pump / compressor!
  Do not switch on!"
- Depressurise machine and lines.

8.2 Draining

- Open shut-off fitting for draining and flushing machine.
  This is located in the drain pipe on the connection for draining and flushing.
- With mechanical seal completely drain liquid out of all seal housings.

⚠ CAUTION

Danger of slipping and falling due to escaping liquid!

Provide suitable catch container when draining the machine and the mechanical seal.

⚠ WARNING

Danger of environmental damage!

If the sealing liquid is harmful to the environment:

Provide suitable catch container when draining mechanical seals.
Dispose of sealing liquid in accordance with country-specific and / or local regulations.

8.3 Brief stillstand

When shutting down the machine for 2-3 weeks, proceed as follows:

- The impeller must be moved a few turns at least once a week to prevent the formation of rust between the parts and possible jamming.

8.4 Longer stillstand

A longer standstill of the machine can, for example, occur during operation or between a brief test run and actual commissioning.

You have two options for the standstill:
Either the machine remains connected in the system,
or the machine is removed for storage.

8.4.1 Special preparations for longer standstill

The additional, special preparations to be made for a longer standstill are dependent on the material variant of the machine.
The material variant of the machine is specified by the 9th position of the type designation on the rating plate.

For stainless-steel machines (material variant F):

No special preparations required.

For machine with parts not corrosion-resistant (all other material variants):

- Neutralise machine.
  To do this use a fluid that is both harmless to the machine and to the process, generally clean water.
- Drain machine,
  as described in Chapter 8.2, pg. 42.

NOTICE

The periods / intervals for the specified measures are highly dependent on the environmental conditions.

With unfavourable conditions (e.g. high humidity, salty air, sandy or dusty air) the periods / intervals may need to be shortened.

If in doubt, it is necessary to enquire with nash_elmo Service.

When shutting down the machine for more than 3 weeks, proceed ad follows to prevent the formation of rust between the parts and possible jamming:

- Set up sufficiently large catch container below end shields of machine.
- Remove plug for complete draining (see Fig. 1, pg.10 to Fig. 2: connections N4.2) on end shields.
- After completely draining machine:
  Remount plug for complete draining (see Fig. 18, pg. 53 to Fig. 24, pg. 62, item 22).
- Mount lines on discharge connection and close them off with a blind flange.
- Fill machine via inlet flange one-quarter with water-soluble preservative oil, e.g. CORTEC VCI 379E or an equivalent oil.
- Switch on machine for a maximum of 15 seconds and then switch off again.
- Switch on machine again for a maximum of 15 seconds and then switch off again.
- Set up sufficiently large catch container below end shields of machine.
- Remove plug for complete draining (see Fig. 18, pg. 53 to Fig. 24, pg. 62, item 22) on end shields.
- Remount drain plug using a pipe-thread sealing compound.
- Repair all points at which paint has flaked off and apply a rust inhibitor.
- Seal off machine inlet connection.
- To recommission, proceed as described in Chapter 7, "Commissioning / Operation", pg. 36.
- Follow instructions of seal manufacturer!

8.5 Storage conditions

This chapter applies in the following cases:

- New machines,
- Machines prepared for a longer standstill, as described in Chapter 8.4, "Longer stillstand", pg. 42.

All openings on the machine to which lines can be connected (connections, connections in end shield) must be closed off.

- If the machine is installed in the system:
  Make sure that all pipes and hoses are connected.
  Make sure that closures are mounted on all openings not required (e.g. blind flanges on connections, plugs on threaded connections).
- If the machine stands separately, e.g. in the storage area:
  Make sure that closures are mounted on all openings (e.g. blind flanges or plastic caps on connections, plugs on threaded connections).

The environment in which the machine is stored must have the following characteristics:

- dry,
- dust free,
- vibration-free.

9 Troubleshooting

9.1 Fault localisation

Values to be measured:
- Inlet capacity or achieved inlet pressure / discharge pressure

Ensure the following for the V-belt drive:
- Check V-belt tension periodically and adjust in accordance with manufacturer's specifications in case of differences,
- Check V-belt for excessive wear. V-belts are normally designed for 24,000 hours of use.

If malfunctions occur during operation, proceed as follows:
- Check whether the operating-liquid volumetric flows comply with the values in Chapter 3.2, "Operating conditions", Section "Sealing liquid", pg. 20.
- Check whether the shaft rotating direction matches the arrow on the housing.
- Check whether the machine runs at the proper speed, which is not necessarily specified on the rating plate.
- Check whether the gas inlet pipe is blocked.
- If the machine is switched off because the temperature, noises / vibrations differ from the normal operating conditions, check the bearing lubrication, the bearing condition and the alignment of the coupling and V-belt drive. Contact your nash_elmo Service for alignment and tensioning of V-belts.

NOTE

If the fault cannot be localised with the aid of these checking measures, contact your nash_elmo Service before dismantling the machine. It will assist you in localising and eliminating the fault.

9.2 Troubleshooting guideline

Fault	Cause	Remedy
The motor is switched on, however it does not start up and no noise can be heard.	At least 2 electric lines are interrupted.	Check fuses, terminals and cables.
The motor does not start up, however a vibration noise can be heard.	One or several electric lines are interrupted.	See above.
	The impeller is blocked.	Dismantle machine.
		Drain, decalcify and clean machine.
		Assembly machine.
		Check clearance between impeller, rotor and housing for correct adjustment.
Main circuit-breaker jumps out immediately after start-up.	Short-circuit in motor winding.	Check motor winding.
	Motor is overloaded.	Reduce operating liquid flow rate.
	Counter-pressure at discharge connection too high.	Reduce counter-pressure.
	The liquid flow-rate is set too high.	Reduce liquid quantity.
	Machine blocked.	See "The impeller is blocked".

Fault	Cause	Remedy
Absorbed output is greater than specified.	Lime deposits.	Dismantle and clean machine.
	Counter-pressure at discharge connection too high.	Reduce counter-pressure.
	The liquid flow-rate is set too high.	Reduce liquid quantity.
	Motor is overloaded.	Reduce operating liquid flow rate.
Vacuum is not achieved.	No infeed of operating liquid.	Check operating fluid inlet pipe.
	Air enters into system.	Check all connections and seals and tighten if necessary.
	Wrong direction of rotation.	Reverse rotating direction by exchanging two electrical connections.
Insufficient vacuum.	Machine is too small.	Replace machine with a larger one.
	Operating liquid flow too low.	Increase operating liquid flow rate.
	Operating liquid temperature too high.	Cool down operating liquid or increase operating liquid flow rate.
	Air enters into system.	Check all connections and seals and tighten if necessary.
	Mechanical seal leakage.	Replace mechanical seal.
	Wear on inside of machine.	Dismantle machine and replace damaged parts.
Unusual noise or squeaking.	Cavitation in the machine.	Feed in air, mount valve on inlet connection or mount anti-cavitation valve.
	Operating liquid flow rate too high.	Ensure proper sealing-liquid flow rate. Reduce if too high.
	Bearing noises.	Replace bearing(s).
Liquid escapes between housings.	Damaged gaskets.	Replace gaskets.
	Screws loose.	Check whether screws are tightened in accordance with proper tightening torques.

10 Maintenance

⚠ WARNING

Improper use of the machine
Improper use of the machine can result in serious or even fatal injuries!

Before beginning any work, the following safety precautions are to be observed:

Switch off the machine as described in Chapter 7.4, "Shut-down", pg. 40.

Vent / bleed the pipe so that the internal pressure and atmospheric pressure are equal.

Make sure that the power supply is switched off, and the main switch is switched off, locked and marked as switched off.

Drain the operating liquid as described in Chapter 8.2, "Draining", pg. 42 et seqq.

If the machine has been operated with a toxic liquid, careful flushing with a suitable liquid is required.

10.1 6-month interval

NOTE

Adapt time schedules to your specific operating conditions.

- Maintain drive coupling according to coupling manufacturer's instructions.
- Lubricate bearings according to Chapter 10.3, pg. 46.
- Lubricate drive motor bearings according to motor manufacturer's instructions.
- Check V-belt (if used) for sufficient tension and wear. Replace V-belt if necessary. Contact your nash_elmo Service for details on tensioning and replacing V-belts.

10.2 12-month interval

NOTE

Adapt time schedules to your specific operating conditions.

- Check and lubricate bearings, see Chapter 10.3, pg. 46.

10.3 Lubricating the bearings

The bearings were lubricated before shipping and require no further lubrication for approx. 6 months.

NOTE

Lubricate bearings yearly. For permissible greases see Table 8, pg. 47.
Depending on the operating and environmental conditions the necessary lubrication intervals may be shorter.
Lubrication takes place with the machine running.

10.4 Inspecting the bearings

To check the condition and quantity of the grease in the bearing bracket, proceed as follows:

- Shut down the machine, as described in Chapter 7.4, "Shut-down", pg. 40.
- Make sure that the drive motor is electrically deenergized.
  Secure against being switched on again.
- Depressurise machine and lines.
- Check the grease in the bearing covers for soiling and the presence of water.
- If the grease is soiled, remove the bearing (see servicing instructions).
- Clean the bearings.
- Clean bearing bracket and bearing cover to remove the entire grease and the soiling.
- If necessary, refit the bearing, the cover and the related parts (see servicing instructions).

Permissible grease

General requirements

A. Premium quality industrial bearing grease.
B. Degree of consistency: NLGI 2
C. Oil viscosity (minimum):
   40 °C (104 °F) 108 mm²/s
   100 °C (212 °F) 10 mm²/s
D. Thickener (base): lithium, lithium complex or polyurea for optimum WATER RESISTANCE.
E. Behaviour characteristics at operating temperature:
   1. Operating temperature range; at least -20 °C to 120 °C (-0.4 °F to 248 °F)
   2. Long-term behaviour
   3. Good mechanical and chemical stability.
F. Additives - specified:
   1. Oxidation protection
   2. Rust inhibitor
G. Additives - optional:
   1. Anti-wear additive
   2. Anti-corrosive agent
   3. Metal deactivator
   4. Extreme pressure (EP) *) agents
H. Additives - impermissible:
   1. Molybdenum sulphide (MoS_2)
   2. Tackifier

*) only required on machines with taper roller bearings

Standard recommendations for grease (by manufacturer)
The following provides as a list of several grease types with the required properties:

Grease Manufacturer	Product
SHELL	Alvania EP (LF) 2
BP	Energrease LS2
AGIP	GR MU EP2
CHEVRON	Dura-Lith Grease EP2
DEA	Paragon EP2
ESSO	Baecon EP2
MOBIL	Mobilux EP2
Texaco	Multifak Multipurpose 2
Gulf	Gulfsrown Nr.2
Century	Lupos A2
Nynas	Alexol L-42

Note: This list does not represent a product confirmation of the listed grease types, but is instead solely intended as a reference list. You can also use a comparable product as long as it fulfils the general requirements.

Note on compatibility of grease types: The grease types listed above are standard grease types. To guarantee the highest possible lubricating performance, it is recommended that the mixing of different grease types be restricted to a minimum.

Table 8

10.5 Stuffing box packing

NOTE

For preservative maintenance of the stuffing boxes used, we recommend keeping an **inspection log**.

The inspection log should contain the following information:

- Date
- Type designation and serial number of machine
- Date for tightening and replacing the stuffing box;
  when the machine is used continuously, at least once a year

Replacement at shorter intervals may be required due to difficult operating conditions, e.g. due to soiled operating liquid.

NOTE

Log the number and position of the packing rings on each side of the sealing-water distribution ring. This information is important for ensuring that the sealing-water distribution ring is properly aligned.

When replacing the packing in the stuffing box, remove the old packing as follows:

- Push centrifugal ring (3) against bearing bracket.
- Loosen gland nuts from gland bolts and remove.
- Push stuffing box gland as far as possible away from stuffing box.
- With a gland screwed on, remove the two nuts, washers and bolts which hold together stuffing-box gland halves. Remove the two halves.
- Screw the tips of the packing puller into the packing. See Fig. 15, pg. 48.

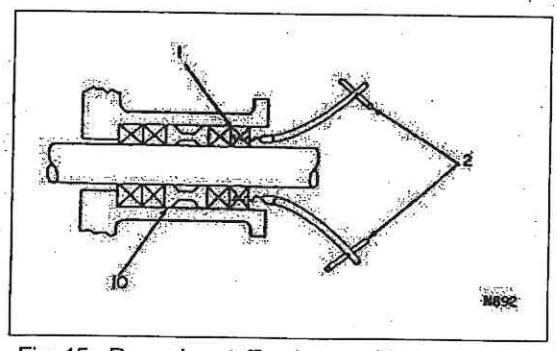

Fig. 15: Removing stuffing box packing

- Pull packing out of stuffing box.
- If sealing-water distribution rings are used, bend two sealing-water distribution ring pullers from steel wire with a 3 mm (1/8 inch) diameter. See Fig. 16, pg. 48.

Fig. 16: Sealing-water distribution ring puller

- Guide wire loop of each sealing-water distribution ring puller around outside diameter of sealing-water distribution ring and into stuffing box until puller lies in grooves on opposite sides of sealing-water distribution rings.
- Pull sealing-water distribution ring out of stuffing box.
- Screw tips of packing pullers into remaining packings and pull packing out of stuffing box.
- Before laying in new packing, thoroughly clean stuffing box and check shaft for heavy scoring and wear.

Lay in new packing,
proceed as follows:

- Produce two hard rubber strips which are fit between outside diameter of shaft and inside diameter of stuffing box and used as packing ring pushers. See Fig. 17 C, pg. 49.
- Lubricate inside diameter of packing rings with Molykote G-N paste or a comparable product.
- Open packing spirally by pulling ends apart in axial direction, as shown in Fig. 17 A, pg. 49.
- Lay each packing ring around shaft and lay in stuffing box, as shown Fig. 17 B, pg. 49.
- Push first packing ring into stuffing box as firmly as possible with pusher produced as described above. Make sure that packing ring is fit into face of stuffing box, as shown in Fig. 17 C, pg. 49. As soon as another packing ring is laid in, move joint gap of ring so that joint gap of following rings is offset by 180 degrees. See Fig. 17 D, pg. 49. Make sure that each packing ring is firmly fitted.
- Lay in sealing-water distribution ring (10) if it was included.
- Lay in all other packing rings as described above.

- Install two halves of stuffing box gland on shaft and connect with two nuts, washers and bolts. Push stuffing box gland onto gland bolts so that it is flush with last packing ring laid in. Screw on gland nuts and tighten evenly by hand. See Fig. 17 F, pg. 49.
- Start machine as specified in Chapter 7, "Commissioning / Operation", pg. 36. Check temperature in stuffing box area during operation. Make sure that the stuffing box has leakage at all times.
  If no leakage occurs, or if stuffing box overheats, switch off machine and determine cause. Replace packing if necessary.
- When the machine has run 10 minutes with continuous leakage, tighten gland nuts one turn per test. Repeat this procedure at 10-minute intervals until leakage from gland is approx. 45 to 60 drops per minute without stuffing box overheating. This dripping is necessary to ensure lubrication of packing, and therefore prevent scoring and burning in on shaft. As a result, gland nut should be tightened at normal machine operating temperatures and under vacuum.

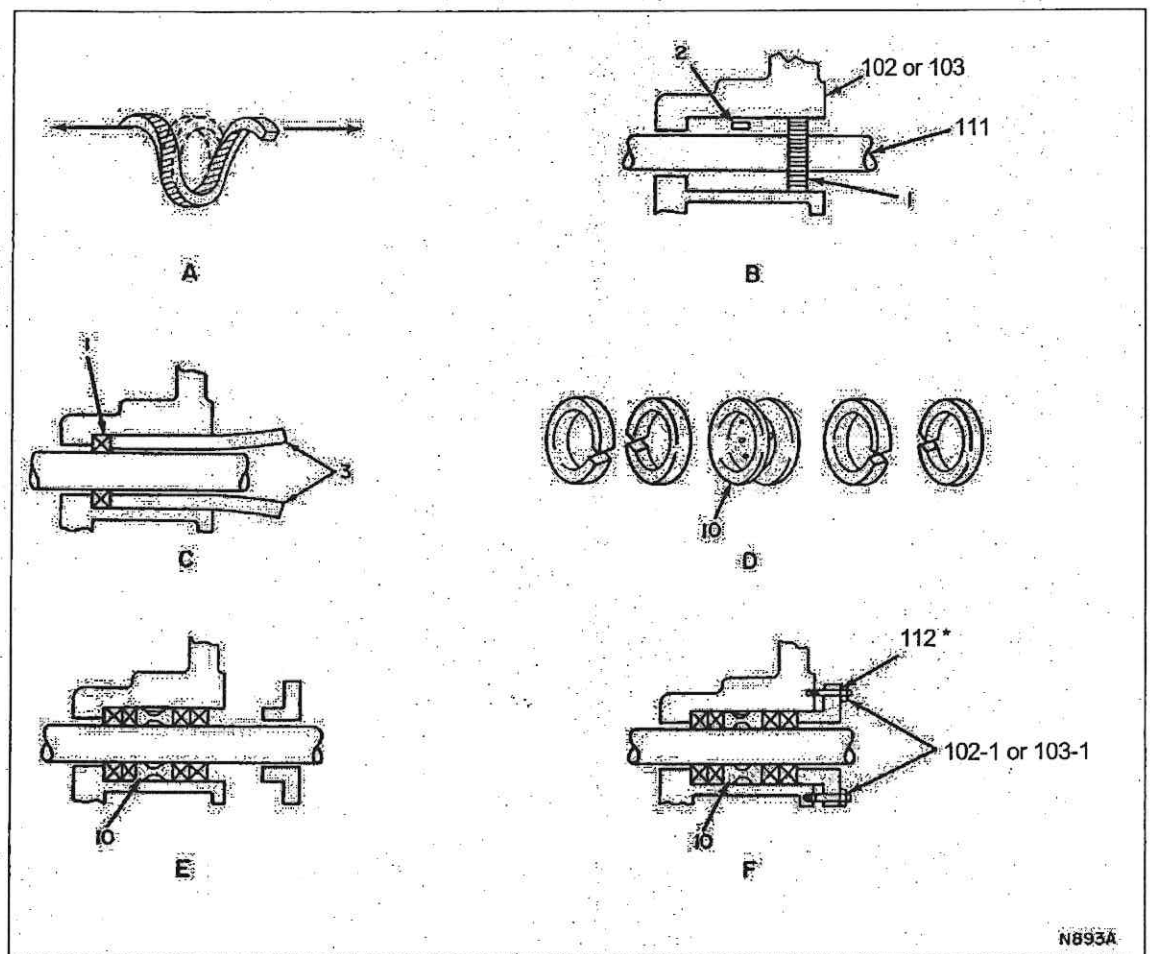

* View F turned by 90°, to illustrate gland bolts and gland nuts.

1	Packing rings	102 / 103	End shield on N-end
2	Inlet channel to sealing-water distribution ring **	102-1 / 103-1	Gland nut
3	Packing ring pusher	111	Shaft
10	Sealing-water distribution ring **	112	Stuffing box gland

** if used

Fig. 17: Stuffing box packings

11 Spare Parts

When ordering manufacturer's spare parts, always indicate the following:

- Part designation
- Part number
- Machine model
- Information on rating plate
- Serial number

12 Warranty Claims and Returns

When warranty claims are asserted, the machine must be sent to our company in a closed package. Before packing, it must be drained and cleaned. For safety reasons, the machine must be flushed with suitable materials prior to shipping if it has been operated with toxic or dangerous liquids. Please contact nash_elmo before you send any parts to our plant.

Blank Page

13 Exploded View of SC with Parts List

13.1 Parts List SC2 ... SC5

Item No.	Part Designation	Quantity
1	* Stuffing box packing	10
3	* Centrifugal ring	2
3-1	* Tension spring (only SC2, SC3)	2
4	* Shim washer	a.r.
5	* Shaft sealing ring, internal	2
5-1	* Shaft sealing ring, external	1
10	* Sealing-water distribution ring (if available, 8 packing rings are necessary)	2
22	Plug	2
22-1	Plug	10
22-2	Plug	1
23	Lubrication nipple	2
101	Housing	1
101-1	Gland nut for stuffing box	2
101-2	Gland stud for stuffing box	2
101-3	* Gasket for housing	1
102	End shield, D-end	1
102-1	Gland nut for stuffing box	2
102-2	Gland stud for stuffing box	2
102-4	Screw for end shield	6
102-5	Screw for end shield	4
104	Cone, D-end	1
104-1	Screw for cone	8
104-3	* Gasket for cone	1
108	Floating bearing bracket	1
108-1	* Screw for floating bearing bracket	4

Item No.	Part Designation	Quantity
109	Fixed bearing bracket	1
109-1	Screw for fixed bearing bracket	4
110	Impeller	1
111	Shaft	1
111-1	Feather key	1
112	Stuffing box gland	2
115	Floating outer bearing cap	1
115-1	Screw for outer bearing cap	4
115-2	Nut for outer bearing cap	4
115-3	* Gasket for outer bearing cap	1
116	Floating inner bearing cap	1
116-3	* Gasket for inner bearing cap	1
117	Fixed outer bearing cap	1
117-1	Screw for outer bearing cap	4
117-2	Nut for outer bearing cap	4
117-4	Screw for outer bearing cap	3
117-5	Closing cap	1
118	Fixed inner bearing cap	1
119	* Floating bearing	1
120	* Fixed bearing	1
120-1	* Shaft nut for fixed bearing	1
120-3	* Gasket for fixed bearing	2

* recommended spare parts

a.r. = as required.

13.1.1 Exploded view SC2 ... SC5

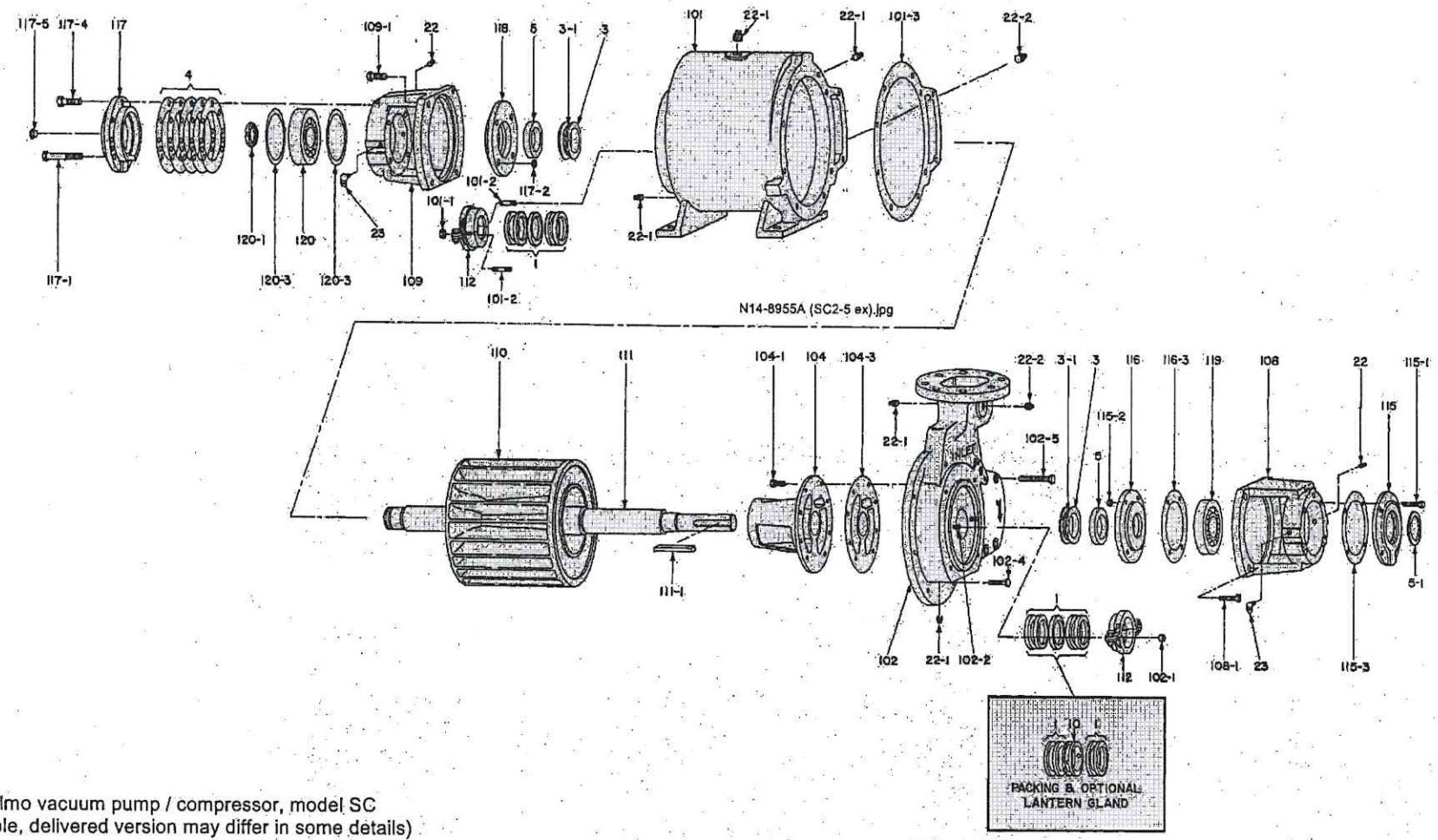

nash_elmo vacuum pump / compressor, model SC
(Example, delivered version may differ in some details)

Fig. 18: Exploded view SC2 ... SC5

13.2 Parts List SC6 ... SC7

Item No.	Part Designation	Quantity
1	* Stuffing box packing	10
3	* Centrifugal ring	2
3-1	* Tension spring	2
4	* Shim washer	a.r.
5	* Shaft sealing ring, internal	2
5-1	* Shaft sealing ring, external	1
10	* Sealing-water distribution ring (if available, 8 packing rings necessary)	2
22	Plug	4
22-1	Plug	10
22-2	Plug	1
22-3	Plug	1
23	Lubrication nipple	2
101	Housing	1
101-1	Gland nut for stuffing box	2
101-2	Gland stud for stuffing box	2
101-3	* Gasket for housing	1
103	End shield, N-end	1
103-1	Gland nut for stuffing box	2
103-2	Gland stud for stuffing box	2
103-4	Screw for end shield	6
103-5	Screw for end shield	4
105	Cone, N-end	1
105-1	Screw for cone	8
105-3	* Gasket for cone	1
108	Floating bearing bracket	1
108-1	* Screw for floating bearing bracket	4

Item No.	Part Designation	Quantity
109	Fixed bearing bracket	1
109-1	Screw for fixed bearing bracket	4
110	Impeller	1
111	Shaft	1
111-1	Feather key	1
112	Stuffing box gland	2
115	Floating outer bearing cap	1
115-1	Screw for outer bearing cap	4
115-2	Nut for outer bearing cap	4
115-3	* Gasket for outer bearing cap	1
116	Floating inner bearing cap	1
116-3	* Gasket for inner bearing cap	1
117	Fixed outer bearing cap	1
117-1	Nut for outer bearing cap	4
117-2	Screw for outer bearing cap	4
117-4	Screw for outer bearing cap	3
117-5	Closing cap	1
118	Fixed inner bearing cap	1
119	* Floating bearing	1
120	* Fixed bearing	1
120-1	* Shaft nut for fixed bearing	1
120-3	* Gasket for fixed bearing	2

* recommended spare parts

a.r. = as required.

13.2.1 Exploded view SC6 ... SC7

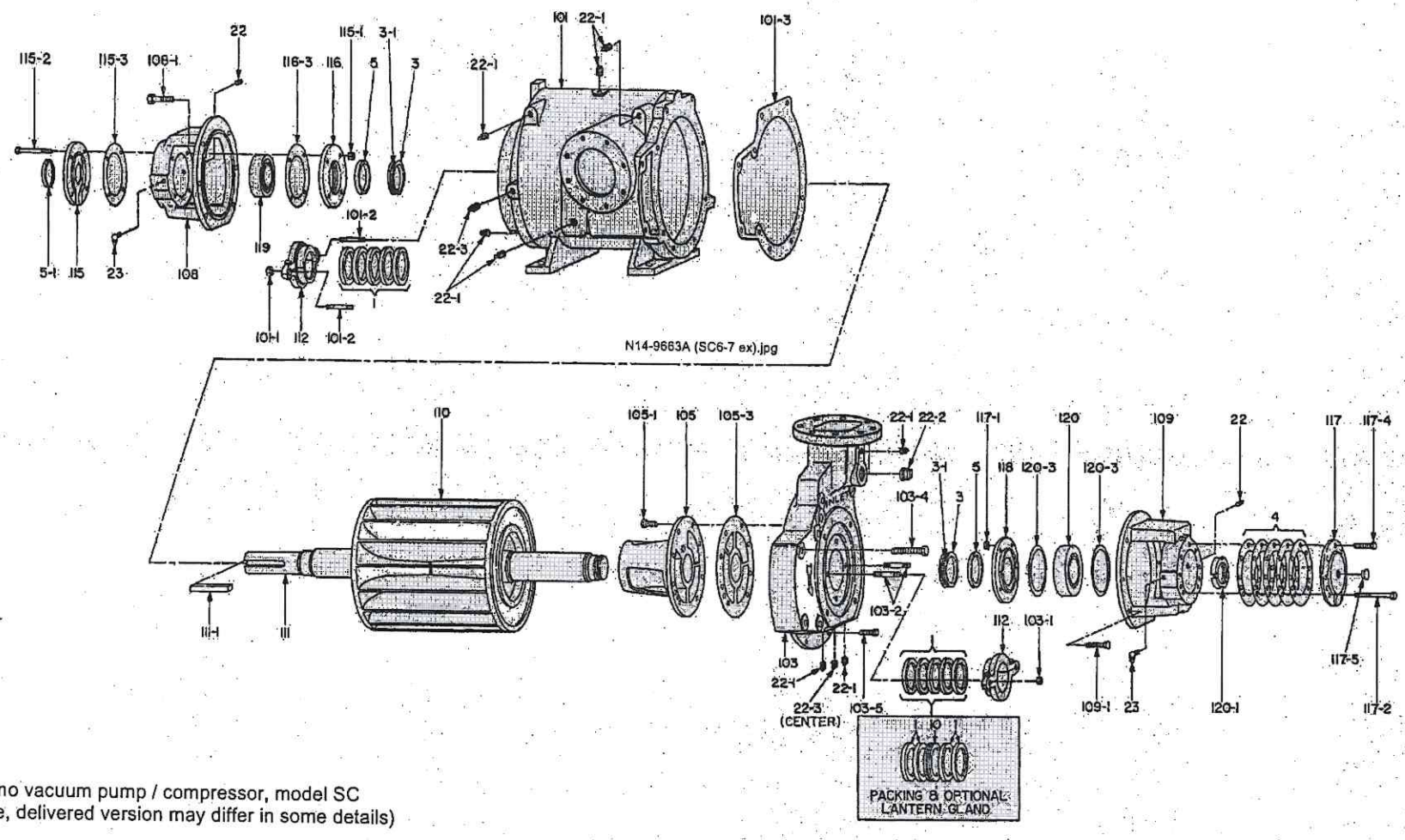

nash_elmo vacuum pump / compressor, model SC
(Example, delivered version may differ in some details)

Fig. 19: Exploded view SC6 ... SC7

13.3 Parts List SC9 ... SC11

Item No.	Part Designation	Quantity
1	* Stuffing box packing	8
3	* Centrifugal ring	2
3-1	* Tension spring	2
4	* Shim washer	a.r.
5	* Shaft sealing ring, internal	2
5-1	* Shaft sealing ring, external	1
10	* Sealing-water distribution ring	2
12	Cover check valve	1
12-1	Screw for cover check valve	6
12-3	Gasket check valve	1
18	Valve ball	2
22-1	Plug	8
22-2	Plug	1
22-3	Plug	1
22-4	Plug	3
23	Lubrication nipple	2
23-1	Reducing bushing	2
101	Housing	1
101-1	Gland nut for stuffing box	2
101-2	Gland stud for stuffing box	2
101-3	* Gasket for housing	1
103	End shield, N-end	1
103-1	Gland nut for stuffing box	2
103-2	Gland stud for stuffing box	2
103-4	Screw for end shield	14
103-5	Screw for end shield	7
105	Cone, N-end	1
105-1	Screw for cone	8
105-3	* Gasket for cone	1
108	Floating bearing bracket	1
108-1	* Screw for floating bearing bracket	4

Item No.	Part Designation	Quantity
109	Fixed bearing bracket	1
109-1	Screw for fixed bearing bracket	4
110	Impeller	1
111	Shaft	1
111-1	Feather key	1
112	Stuffing box gland	2
115	Floating outer bearing cap	1
115-1	Nut for outer bearing cap	4
115-2	Screw for outer bearing cap	4
115-3	* Gasket for outer bearing cap	1
116	Floating inner bearing cap	1
116-3	* Gasket for inner bearing cap	1
117	Fixed outer bearing cap	1
117-1	Screw for outer bearing cap	4
117-2	Screw for outer bearing cap	4
117-4	Nut for outer bearing cap	4
117-5	Closing cap	1
118	Fixed inner bearing cap	1
119	* Floating bearing	1
119-1	* Nut for floating bearing	1
119-2	* Locking plate for floating bearing	1
120	* Fixed bearing	1
120-1	* Shaft nut for fixed bearing	1
120-2	* Locking plate for fixed	1
120-3	* Gasket for fixed bearing	2

* recommended spare parts

a.r. = as required.

13.3.1 Exploded view SC9 ... SC11

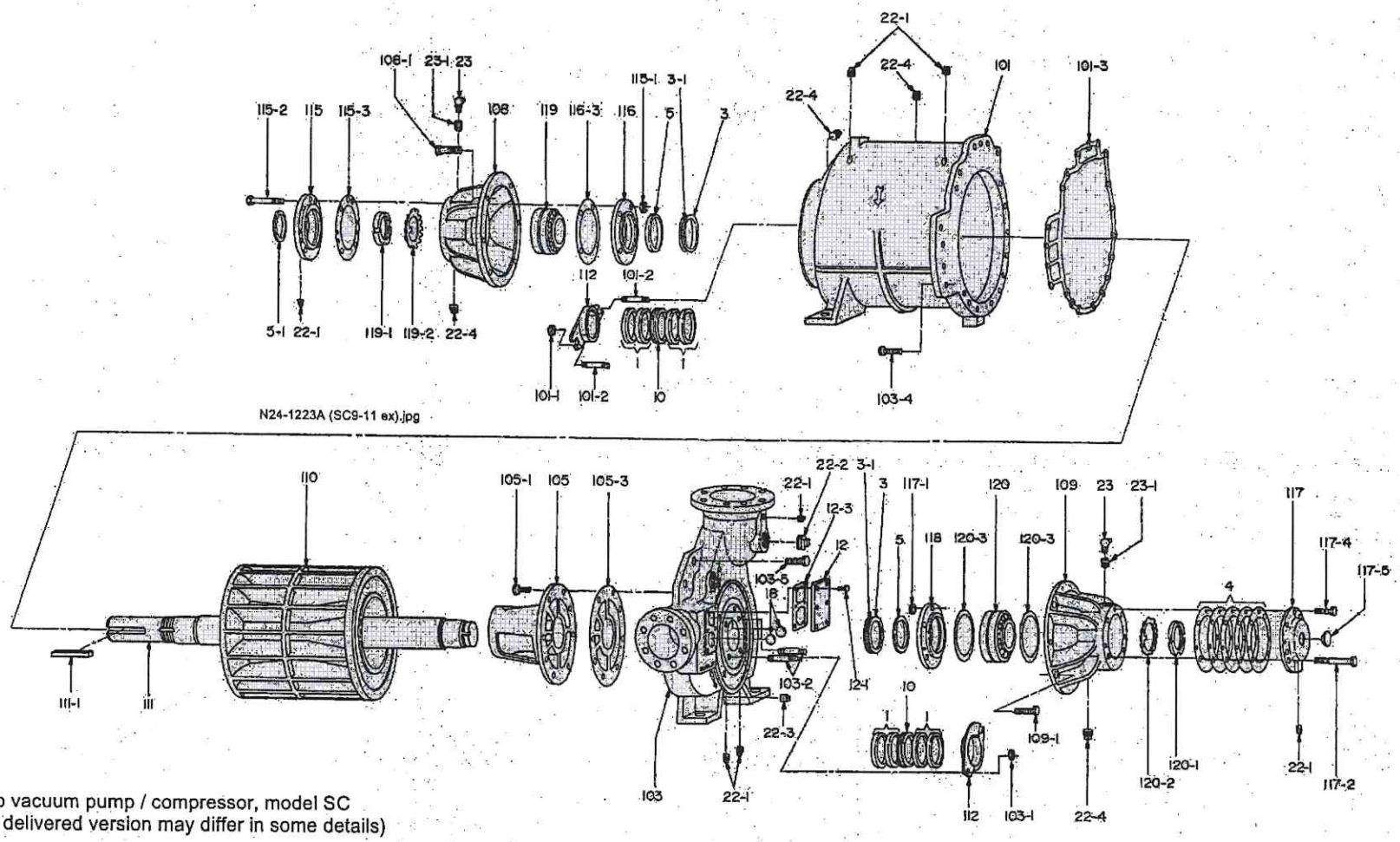

nash_elmo vacuum pump / compressor, model SC
(Example, delivered version may differ in some details)

Fig. 20: Exploded view SC9 ... SC11

14 Exploded view of TCM / TC with Parts Lists

14.1 Parts List TCM1 ... TC11

Item No.	Part Designation	Quantity
1	* Stuffing box packing	8
3	* Centrifugal ring	2
3-1	* Tension spring (only TC11)	2
4	* Shim washer	a.r.
5	* Shaft sealing ring, internal	2
5-1	* Shaft sealing ring, external	1
10	* Sealing-water distribution ring	2
21	Orifice plug	1
22	Plug	2
22-1	Plug	7
22-2	Plug (only TCM1 ... TC7)	2
22-3	Plug (only TCM1 ... TC7)	4
23	Lubricating nipple	2
23-1	Reducing bushing	2
101	Housing	1
101-3	* Gasket for housing, D-end TCM1 ... TC5: TC7 ... TC11:	 4 6
101-4	* Gasket for housing, N-end TCM1 ... TC5: TC7 ... TC11:	 4 6
102	End shield, D-end	1
102-1	Gland nut for stuffing box	2
102-2	Gland stud for stuffing box	2
102-4	Screw for end shield	4
102-5	Screw for end shield (only TCM1 ... TC7)	6
103	End shield, N-end	1
103-1	Gland nut for stuffing box	2
103-2	Gland stud for stuffing box	2
103-4	Screw for end shield TCM1 ... TC5: TC7, TC11:	 4 10
103-5	Screw for end shield TCM1 ...TC5: TC7: TC11:	 6 1 --
104	Cone, D-end	1
104-1	Screw for cone	8
104-3	* Gasket for cone	1

Item No.	Part Designation	Quantity
105	Cone, N-end	1
105-1	Screw for cone	8
105-3	* Gasket for cone	1
108	Floating bearing bracket, D-end	1
108-1	* Screw for floating bearing bracket	4
109	Fixed bearing bracket, N-end	1
109-1	Screw for fixed bearing bracket	4
110	Impeller	1
111	Shaft	1
111-1	Feather key	1
112	Stuffing box gland	2
115	Floating outer bearing cap	1
115-1	Screw for outer bearing cap	4
115-2	Nut for outer bearing cap	4
115-3	* Gasket for outer bearing cap	1
116	Floating inner bearing cap	1
116-3	* Gasket for inner bearing cap	1
117	Fixed outer bearing cap	1
117-1	Screw for outer bearing cap	3
117-2	Screw for outer bearing cap	4
117-4	Nut for outer bearing cap	4
117-5	Closing cap	1
118	Fixed inner bearing cap	1
119	* Floating bearing	1
119-1	* Gasket ring, D-end (only TC11)	1
119-2	* Gasket ring, D-end (only TC11)	1
120	* Fixed bearing	1
120-1	* Shaft nut for fixed bearing	1
120-2	* Gasket ring, N-end (only TC11)	1
120-3	* Gasket for fixed bearing	2

* recommended spare parts

a.r. = as required.

14.1.1 Exploded view TCM1 ... TCM3 / TC5

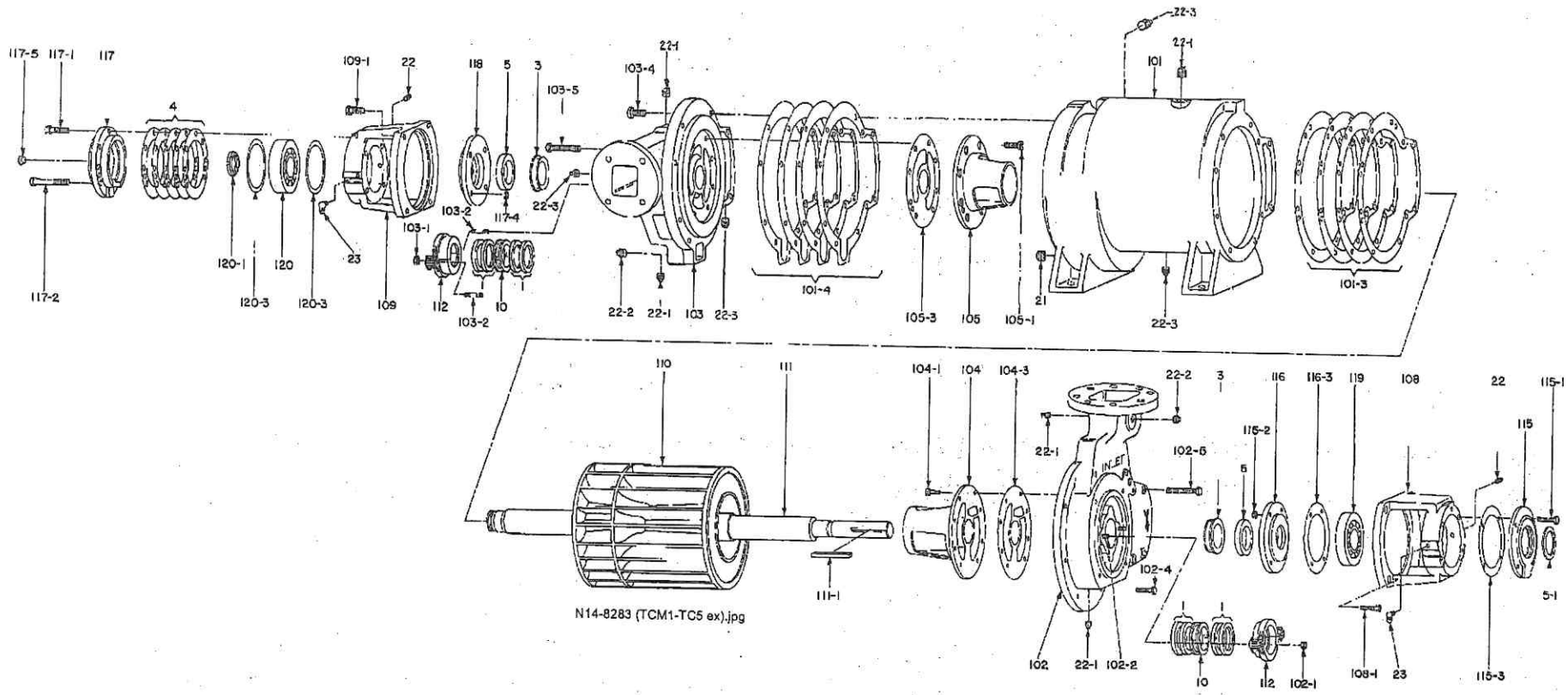

nash_elmo vacuum pump, Series L_800 (TCM / TC)
(Example, delivered version may differ in some details)

Fig. 21: Exploded view TCM1 ...TCM3 / TC5

14.1.2 Cross-sectional diagram TCM1 ... TCM3 / TC5

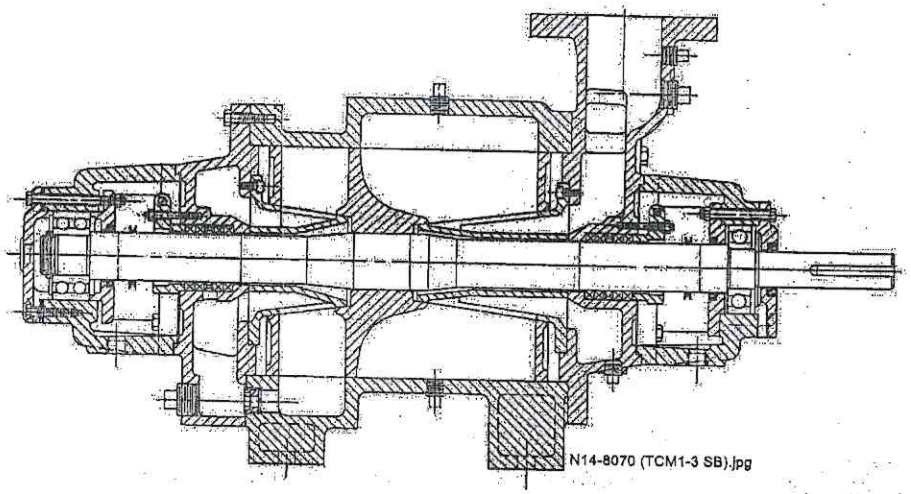

TCM1 ... TCM3

(TCM1 with single-row
ball bearing on N-end)

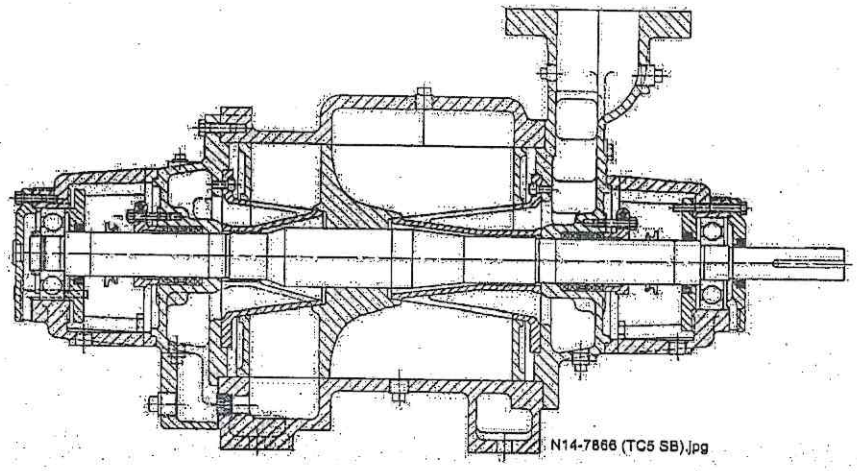

TC5

nash_elmo vacuum pump, Series L_800 (TCM / TC)
(Example, delivered version may differ in some details)

Fig. 22: Cross-sectional diagram TCM1 ... TCM3 / TC5

14.1.3 Exploded view / Cross-sectional diagram TC7

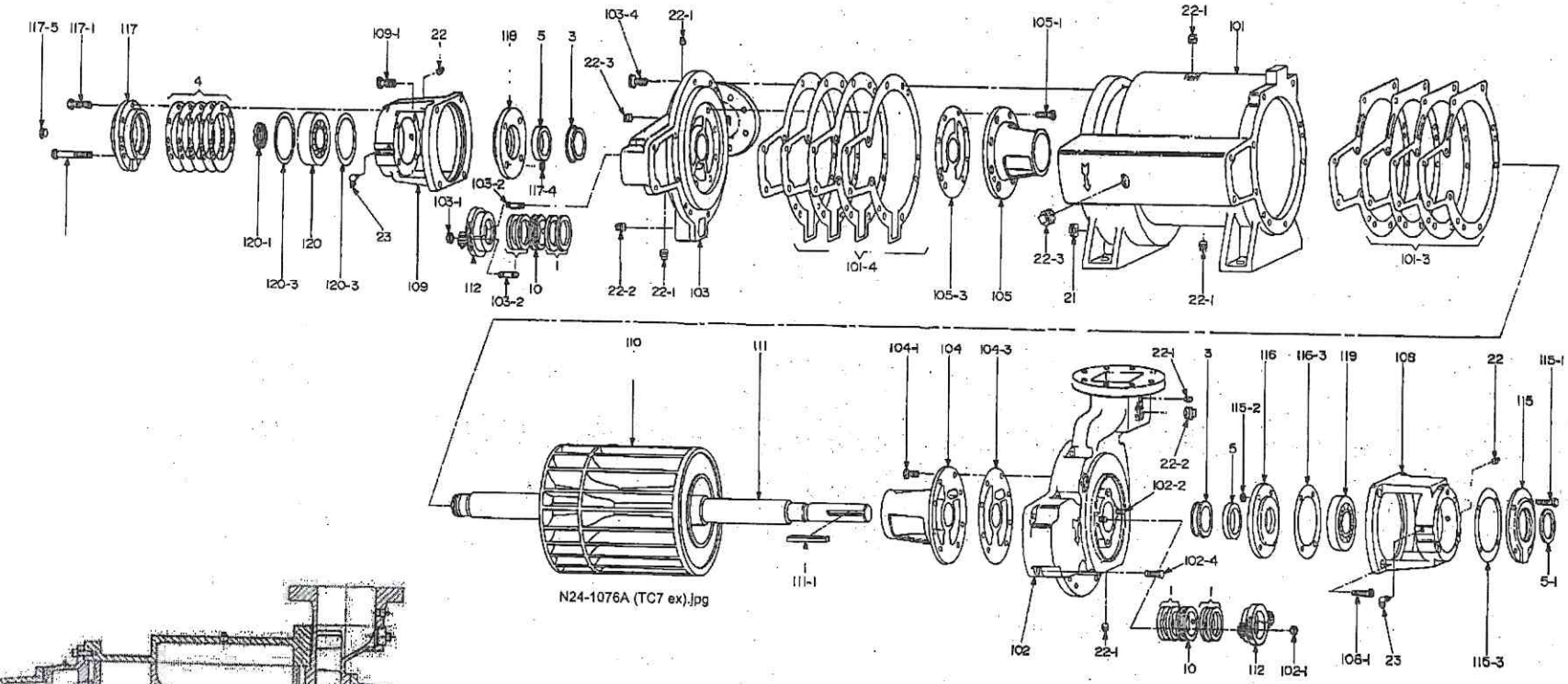

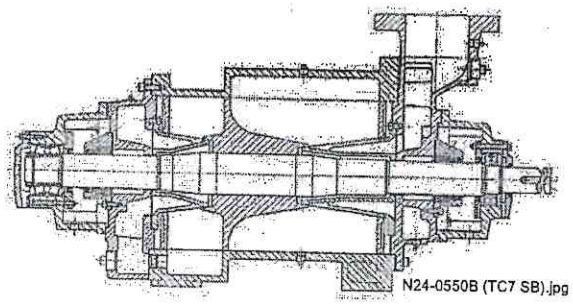

nash_elmo vacuum pump, Series L_800 (TCM / TC)
(Example, delivered version may differ in some details)

Fig. 23: Exploded view / Cross-sectional diagram TC7

14.1.4 Exploded view / Cross-sectional diagram TC 11

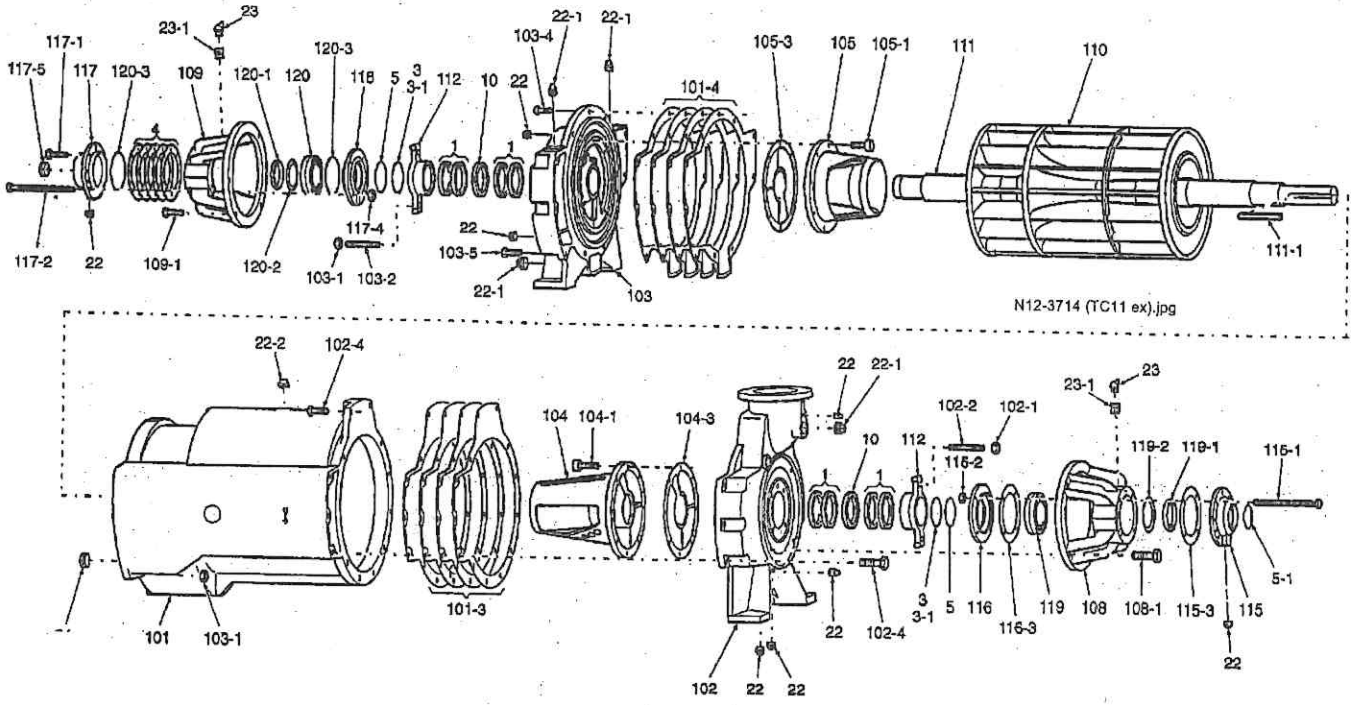

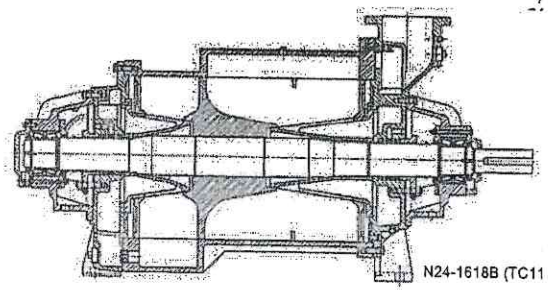

nash_elmo vacuum pump, Series L_800 (TCM / TC)
(Example, delivered version may differ in some details)

Fig. 24: Exploded view / Cross-sectional diagram TC11

15 Form for Declaration of Clearance

nash_elmo

Declaration of clearance for the disassembly of vacuum pumps / compressors

When returning the pump-motor unit / the machine for repair and / or maintenance purposes, complete, sign and enclose this declaration.
The repair and / or maintenance of the returned pump-motor unit / machine in the workshop will only be carried out if this declaration has been completed, signed and enclosed. Each pump-motor unit / machine must be accompanied by a separate declaration.
The declaration must be attached to the outside of the packaging. In addition, prior to shipment a copy of the declaration should be forwarded to the workshop in charge, e.g. by fax.
This declaration may only be completed by authorised and qualified personnel of the operator.

Information on the operator:
Company / Department / Institute: _____
Address: _____
Postal / Zip code, city: _____
Contact person: _____
Position: _____
Phone: _____
Fax: _____

Information on the pump-motor unit / machine:
Product designation: _____
Type: _____
Serial number (No E / No N): _____
Reason for the return of the pump-motor unit / machine: _____

The pump-motor unit / machine designated above and returned by the undersigned *)
☐ has not come in contact with hazardous substances.
☐ was used for the following applications _____

and has come in contact with the following substances which are subject to compulsory marking or are detrimental to health:

Trade name:	Chemical designation:	Properties (e.g. toxic, flammable, corrosive, radioactive):

*) Check where applicable

- ☐ Prior to shipment the pump-motor unit / machine has been completely drained, purged and cleaned thoroughly both inside and outside according to the operating instructions.
- ☐ Special safety precautions are not necessary for further handling.
- ☐ The following safety precautions are required for further handling:

_____

_____

_____

_____

_____

- ☐ Safety data sheets in accordance with the relevant national and local codes and regulations are enclosed.

Legally binding declaration

We hereby affirm that the statements given in this declaration are correct and complete and that I, the undersigned, am capable of judging this. We are aware that we are liable to the contractor for any damage arising from incomplete or incorrect statements. We undertake to hold the contractor harmless from third party damage claims arising from incomplete or incorrect statements. We are aware that - irrespective of this declaration - we are directly liable to third parties, in particular to the personnel of the contractor in charge of the handling as well as the repair / maintenance of the unit.

Place, date: _____ Name: _____

Company stamp: _____ Signature: _____

Index

N

O

P

Q

S

T

U

V

W

Transport instructions

⚠ WARNING

Improper handling of the machine during transport can result in serious or even fatal injuries!

Read operating instructions,
especially the following chapters:

- Chapter 1, "Safety", pg. 5,
- Chapter 5, "Transport and Handling", pg. 26,

The information provided on this page only represents a short version of the specified chapters and cannot replace these!

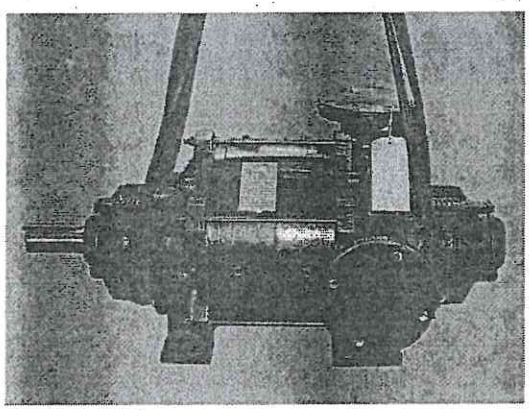

Fig. 25: Lifting machine (exemplary view)

Mass / weight of individual machine SC without operating liquid

Vacuum pump in kg	SC2	SC3	SC4	SC5	SC6	SC7	SC9	SC10	SC11
Ductile iron	112	208	217	247	422	668	-	-	-
Stainless steel	121	223	233	264	451	716	1112	1600	2939
Compressor in kg	**SC2**	**SC3**	**SC4**	**SC5**	**SC6**	**SC7**	**SC9**	**SC10**	**SC11**
Ductile iron	122	217	226	256	431	677	-	-	-
Stainless steel	130	232	242	273	441	693	1128	1620	2962

Mass / weight of individual machine TCM / TC without operating liquid

Vacuum pump in kg	TCM1	TCM2	TCM3	TC5	TC7	TC11
Ductile iron	127	184	209	308	499	2126
Stainless steel	134	197	225	334	544	2313