LP AND LP BYPASS STEAM SYSTEM (LBD/LBS)
ISOMETRICS FOR PIPING > 2"

SHEET N°	LINE	ISSUE 26-10-04	14-03-05	25-04-05	08-09-05	17-05-06		
1	COVER	1	2	3	4	5		
2	5LBD10-BR001-18"-AA1-G / 5LBD11-BR001-10"-AA1-G	1	2	2	2	3		
3	5LBD10-BR001-18"-AA1-G / 5LBD13-BR001-10"-AA1-G	1	2	2	2	3		
4	5LBD10-BR001-18"-AA1-G / 5LBD10-BR002-16"-AA1-G	1	2	2	2	3		
5	5LBD10-BR002-16"-AA1-G / 5LBD14-BR001-10"-AA1-G	1	2	2	2	3		
6	5LBS10-BR001-14"-AA1-G	1	1	1	1	2		
7	5LBS10-BR001-14"-AA1-G / 5LBS11-BR001-10"-AA1-G	1	2	2	2	3		
8	5LBS20-BR001-20"-AA1-G / 5LBS21-BR001-10"-AA1-E / 5LBS22-BR001-4"-AA1-E 5LBS20-BR002-20"-AA1-E	1	2	3	3	4		
9	5LBG20-BR002-14"-AA1-G / 5LBG25-BR002-1 1/2"-AA1-G	1	2	2	2	3		
10	5LBG20-BR001-10"-BA1b-H/ 5LBG30-BR001-3"-BA1b-H / 5LBG25-BR001-1 1/2"-BA1b-H	1	1	1	1	2		
11	5LBG22-BR001-6"-AA1-G / 5LBG22-BR002-10"-AA1-G / 5LBG22-BR003-16"-AA1-G /	1	2	2	2	3		
12	5LBG40-BR001-4"-BA1b-H	1	1	1	1	2		
13	5LBG40-BR001-4"-BA1b-H	1	1	1	1	2		
14	5LBG40-BR001-4"-BA1b-H	1	1	1	2	3		
15	5LBD10-BR003-18"-AA1-G	1	1	1	1	2		

REV.	DATE	PREP.	REVISED	APPRVD.	ISSUED FOR
5	06-05-17	NZAM	NZAM	NZAM	AS BUILT
4	05-09-08	TAS	JEV	FBF	CONSTRUCTION
3	05-04-25	TAS/	EMU/	EMU	CONSTRUCTION
2	14-03-05	TAS/	EMU/	FBF	CONSTRUCTION
1	26-10-04	FGF/	EMU/GFF	FBF	CONSTRUCTION

PROPRIETARY INFORMATION
This document contains proprietary information of Empresarios Agrupados Internacional,S.A. and is to be used solely for the Project and the purpose for which it is furnished. It may not be disclosed to others for a different use without the written permission of Empresarios Agrupados Internacional,S.A.

Contains Information for the design of structures, systems and components..... YES ■ NO □
VERIFICATION: N/A □ HOU/SUP. ■ VERIFIER L1 □ L2 □

DOCUMENT PREPARED WITH CAD DO NOT MODIFY MANUALLY

PUBLIC POWER CORPORATION
LAVRION V CC PP
DMKT 11 21 302

METKA

EMPRESARIOS AGRUPADOS

LP AND LP BYPASS STEAM SYSTEM
PIPING ISOMETRIC

METKA DWG.No.	--	DIN A2	
KKS DWG.No.	413-5-LB-JDI-EA-231	SCALE	--
EA DWG.No.	413-5-D-J-70231	SHEET 1 CONT. 2	

413-5-d-j-70231-001-05

0 100 200 mm

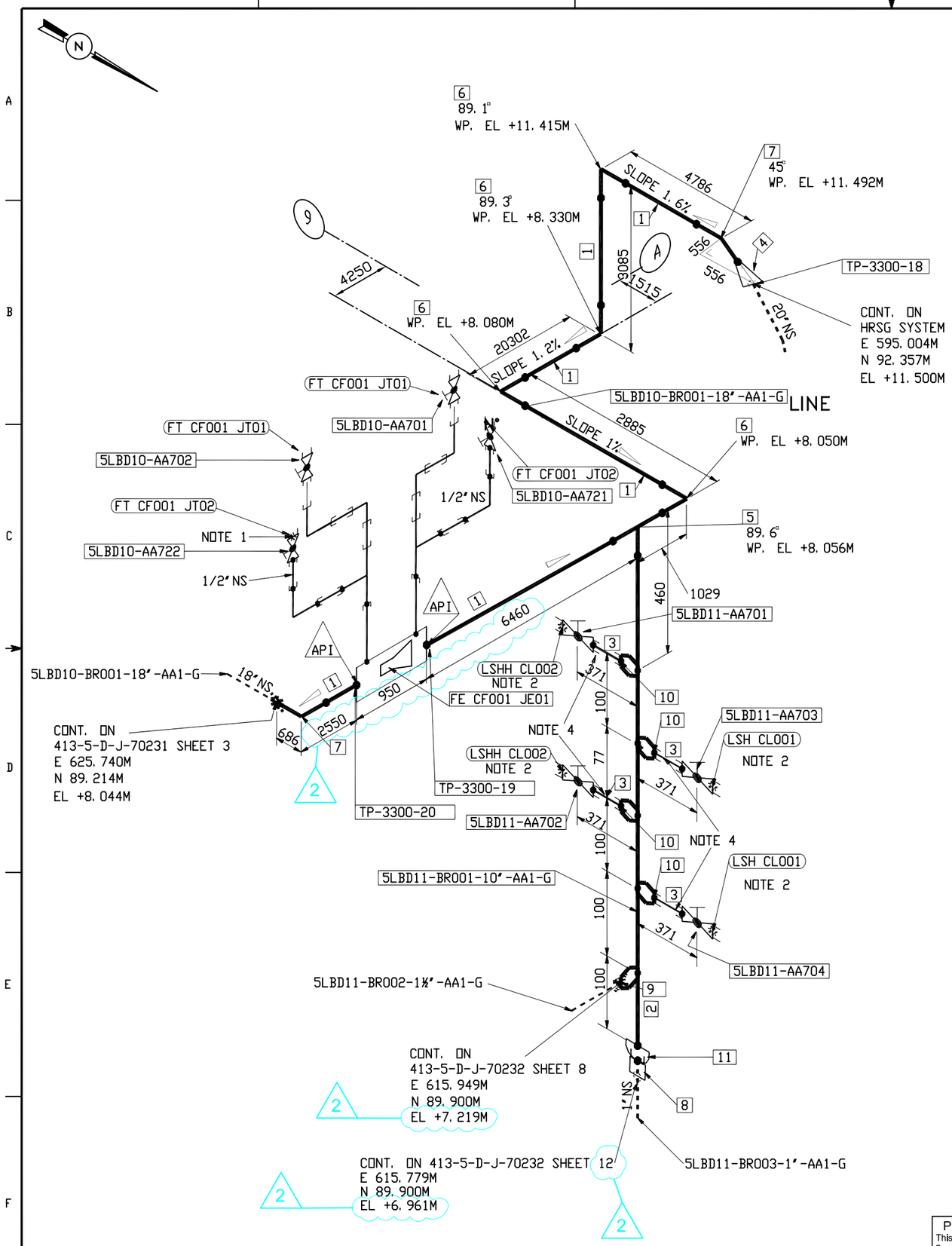

MATERIAL LIST

Nº	Size (Inch.)	DESCRIPTION / MATERIAL	QTY.
1	18	PIPE, S-STD, BE,.....ASTM-A106-GrB	33. 9 M
2	10	PIPE, S- 40, BE,.....ASTM-A106-GrB	0. 9 M
3	1	PIPE, S-80 , PE,.....ASTM-A106-GrB	0. 7 M
4	20X18	CONC. REDUCER, S-STD x S-STD, BE,.....ASTM-A234-WPB	1
5	18X10	REDUCER TEE, S-STD x S-40, BE,..... ASTM-A234-WPB	1
6	18	LR 90 GR ELBOW, S-STD, BE,.....ASTM-A234-WPB	5
7	18	LR 45 GR ELBOW, S-STD, BE,.....ASTM-A234-WPB	1
8	1	HALF COUPLING, CL3000, SWE,.....ASTM-A105	1
9	10X1. 1/2	SOCKOLET, CL3000, BE/SWE,.....ASTM-A105	1
10	10X1	SOCKOLET, CL3000, BE/SWE,.....ASTM-A105	4
11	10	CAP, S-40, BE,.....ASTM-A234-WPB	1

REFERENCE DRAWINGS

Piping Composite	P&ID Nº.
413-5-D-M-60151 SH2	413-5-DT-M-10200 SH2
413-5-D-M-60151 SH3	
413-5-D-M-60152 SH3	

NOTES:

1.– FINAL ARRANGEMENT OF VALVES TO BE ADJUSTED ON SITE TO PREVENT INTERFENRECES

2.– LSH & LSHH PIPES MUST BE INSTALLED COMPLETELY HORIZONTAL

4.– 3" LONG PIECE OF PIPE PLUS THE LENGTH CORRESPONDING TO THE INSULATION THICKNESS

LINES No. =
5LBD10-BR001-18"-AA1-G
5LBD11-BR001-10"-AA1-G

REV.	DATE	PREP.	REVISED	APPRVD.	ISSUED FOR
3	17-05-06	NZAM	NZAM	NZAM	AS BUILT
2	14-03-05	TAS /	EMU/	FBF	CONSTRUCTION
1	26-10-04	FGF /	EMU/ GFF	FBF	CONSTRUCTION

PROPRIETARY INFORMATION
This document contains proprietary information of Empresarios Agrupados Internacional,S.A. and is to be used solely for the Project and the purpose for which it is furnished. It may not be disclosed to others for a different use without the written permission of Empresarios Agrupados Internacional,S.A.

Contains Information for the design of structures, systems and components..... YES ■ NO □
VERIFICATION: N/A □ HOU/SUP. ■ VERIFIER L1 □ L2 □
DOCUMENT PREPARED WITH CAD DO NOT MODIFY MANUALLY

PUBLIC POWER CORPORATION
LAVRION V CC PP
DMKT 11 21 302

METKA
EMPRESARIOS AGRUPADOS

LP AND LP BYPASS STEAM SYSTEM
PIPING ISOMETRIC

METKA DWG.No.	--	DIN A2
KKS DWG.No.	413-5-LB-JDI-EA-231	SCALE --
EA DWG.No.	413-5-D-J-70231	SHEET 2 CONT. 3

413-5-D-J-70231-002-03

AA1
14 OCT 2004

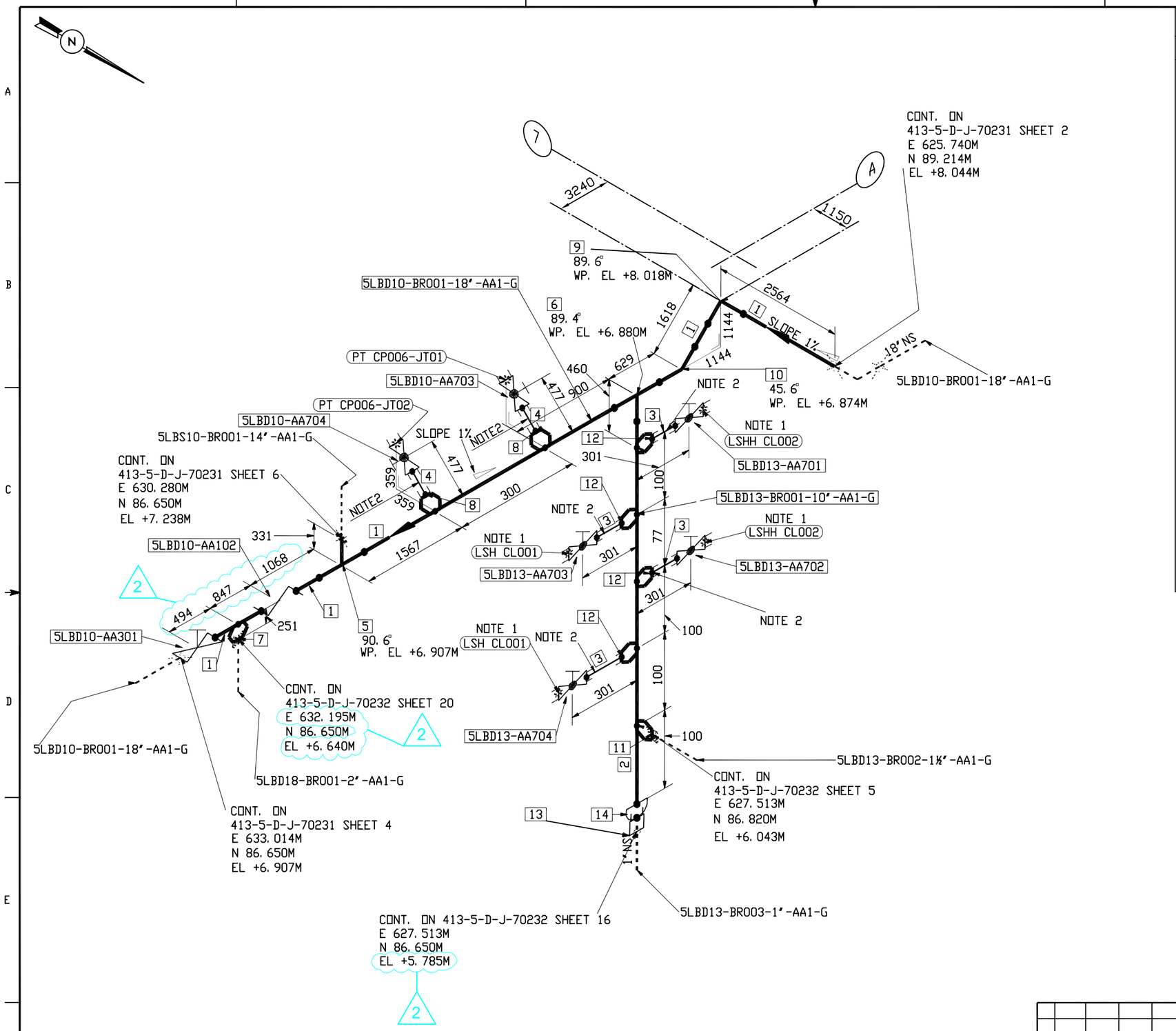

MATERIAL LIST

Nº	(Inch.)	DESCRIPTION / MATERIAL	QTY.
1	18	PIPE, S-STD, BE,.....ASTM-A106-GrB	5.5 M
2	10	PIPE, S- 40, BE,.....ASTM-A106-GrB	0.7 M
3	1	PIPE, S-80 , PE,.....ASTM-A106-GrB	0.4 M
4	3/4	PIPE, S-80 , PE,.....ASTM-A106-GrB	0.5 M
5	18X14	REDUCER TEE, S-STD x S-STD, BE,.....ASTM-A234-WPB	1
6	18X10	REDUCER TEE, S-STD x S-40, BE,..... ASTM-A234-WPB	1
7	18X2	SOCKOLET, CL3000, BE/SWE,.....ASTM-A105	1
8	18X3/4	SOCKOLET, CL3000, BE/SWE,.....ASTM-A105	2
9	18	LR 90 GR ELBOW, S-STD, BE,.....ASTM-A234-WPB	1
10	18	LR 45 GR ELBOW, S-STD, BE,.....ASTM-A234-WPB	1
11	10X1.1/2	SOCKOLET, CL3000, BE/SWE,.....ASTM-A105	1
12	10X1	SOCKOLET, CL3000, BE/SWE,.....ASTM-A105	4
13	10X1	HALF COUPLING, CL3000, SWE,.....ASTM-A105	1
14	10	CAP, S-40, BE,.....ASTM-A234-WPB	1

2

REFERENCE DRAWINGS	
Piping Composite	P&ID Nº.
413-5-D-M-60151 SH2	413-5-DT-M-10200 SH2

NOTES:

1.– LSH & LSHH PIPES MUST BE INSTALLED COMPLETELY HORIZONTAL

2.– 3" LONG PIECE OF PIPE PLUS THE LENGTH CORRESPONDING TO THE INSULATION THICKNESS

3.– THE LENGTHS OF THE STRAIGHT PIPE SECTIONS HAVE BEEN OBTAINED TAKING INTO ACCOUNT THE DISTANCE BETWEEN VALVE FACES ACCORDING TO STANDARD ANSI B16.10 FINAL DIMENSION SHALL BE DEFINED BY THE FABRICATOR BASED ON VALVE SUPPLIER DRAWINGS.

LINES No. =
5LBD10-BR001-18"-AA1-G
5LBD13-BR001-10"-AA1-G

REV.	DATE	PREP.	REVISED	APPRVD.	ISSUED FOR
3	17-05-06	NZAM	NZAM	NZAM	AS BUILT
2	14-03-05	TAS/	EMU/	FBF	CONSTRUCTION
1	28-10-04	FGF/	EMU/GFF	FBF	CONSTRUCTION

Contains Information for the design of structures, systems and components..... YES ■ NO □
VERIFICATION: N/A □ HOU/SUP. ■ VERIFIER L1 □ L2 □
DOCUMENT PREPARED WITH CAD DO NOT MODIFY MANUALLY

PROPRIETARY INFORMATION
This document contains proprietary information of Empresarios Agrupados Internacional,S.A. and is to be used solely for the Project and the purpose for which it is furnished. It may not be disclosed to others for a different use without the written permission of Empresarios Agrupados Internacional,S.A.

PUBLIC POWER CORPORATION
LAVRION V CC PP
DMKT 11 21 302

METKA
EMPRESARIOS AGRUPADOS

LP AND LP BYPASS STEAM SYSTEM
PIPING ISOMETRIC

METKA DWG.No.	--	DIN A2
KKS DWG.No.	413-5-LB-JDI-EA-231	SCALE --
EA DWG.No.	413-5-D-J-70231	SHEET 3 CONT. 4

413-5-D-J-70231-003-03

AA1
14 OCT 2004

0 100 200 mm

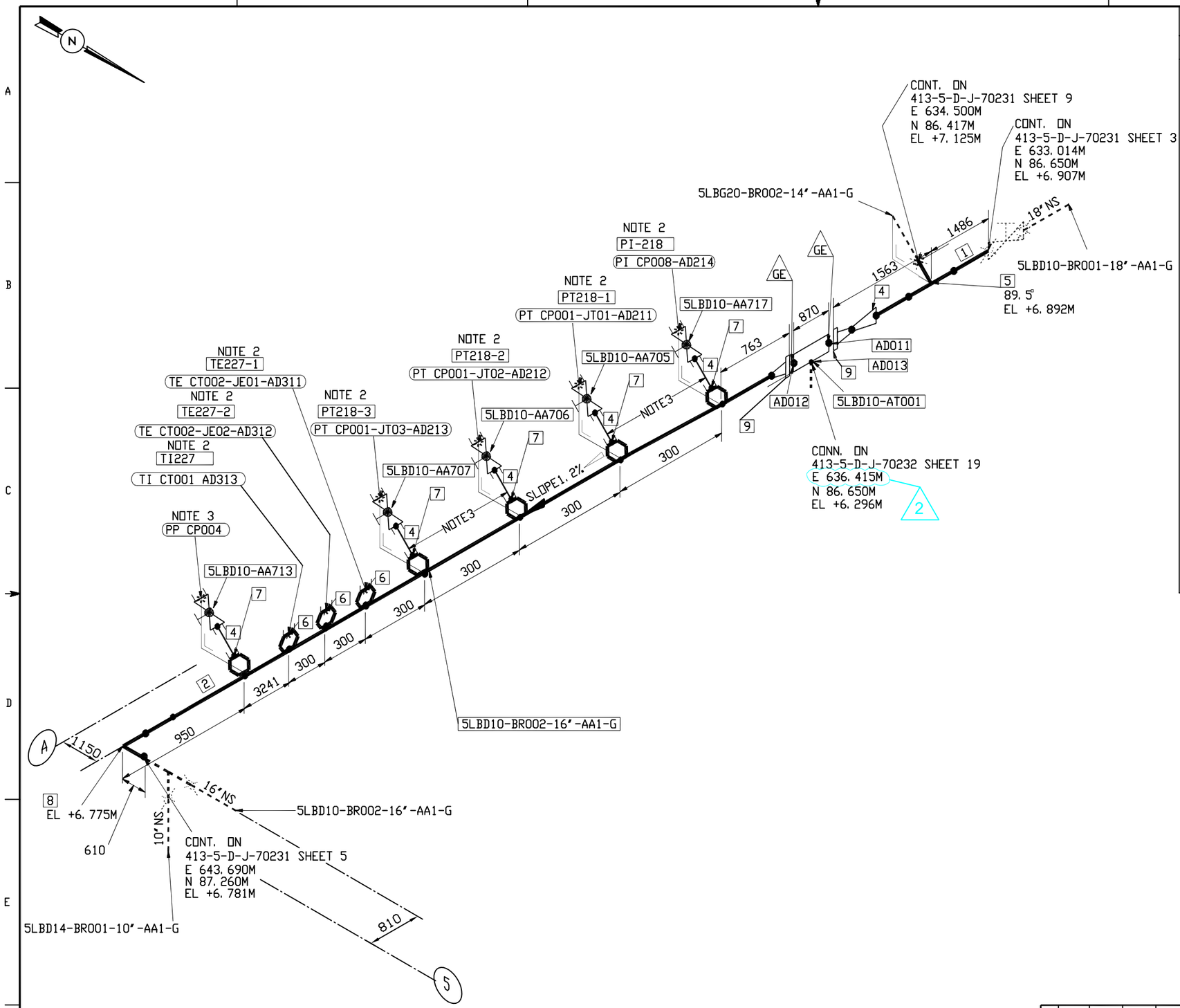

MATERIAL LIST

№	(Inch.)	DESCRIPTION / MATERIAL	QTY.
1	18	PIPE, S-STD, BE,.....ASTM-A106-GrB	1.9 M
2	16	PIPE, S-STD, BE,.....ASTM-A106-GrB	4.8 M
3	3/4	PIPE, S-80 , PE,.....ASTM-A106-GrB	0.7 M
4	18X16	CONC. REDUCER, S-STD x S-STD, BE,.....ASTM-A234-WPB	1
5	18X14	REDUCER TEE, S-STD x S-STD, BE,.....ASTM-A234-WPB	1
6	16X1	SOCKOLET, CL6000, BE/SWE,.....ASTM-A105	3
7	16X3/4	SOCKOLET, CL3000, BE/SWE,.....ASTM-A105	5
8	16	LR 90 GR ELBOW, S-STD, BE,.....ASTM-A234-WPB	1
9	16	FLANGE WN, CL150, S-STD, RFFE/BE,.....ASTM-A105	2

REFERENCE DRAWINGS

Piping Composite	P&ID №.
413-5-D-M-60151 SH2	413-5-DT-M-10200 SH2

NOTES:

1.– SEE GE DRAWING 211D3496 SHEET 1 FOR ADMISSION STRAINER

2.– SEE GE DRAWING 207D3034 SHEET 1/2 FOR INSTRUMENTATION INSTALLATION DETAILS.

3.– 3" LONG PIECE OF PIPE PLUS THE LENGTH CORRESPONDING TO THE INSULATION THICKNESS

4.– THE LENGTHS OF THE STRAIGHT PIPE SECTIONS HAVE BEEN OBTAINED TAKING INTO ACCOUNT THE DISTANCE BETWEEN VALVE FACES ACCORDING TO STANDARD ANSI B16.10 FINAL DIMENSION SHALL BE DEFINED BY THE FABRICATOR BASED ON VALVE SUPPLIER DRAWINGS.

LINES No. = 5LBD10-BR002-16"-AA1-G
5LBD10-BR001-18"-AA1-G

REV.	DATE	PREP.	REVISED	APPRVD.	ISSUED FOR
3	17-05-06	NZAM	NZAM	NZAM	AS BUILT
2	14-03-05	TAS /	EMU/	FBF	CONSTRUCTION
1	26-10-04	FGF /	EMU/ GFF	FBF	CONSTRUCTION

PROPRIETARY INFORMATION
This document contains proprietary information of Empresarios Agrupados Internacional,S.A. and is to be used solely for the Project and the purpose for which it is furnished. It may not be disclosed to others for a different use without the written permission of Empresarios Agrupados Internacional,S.A.

Contains Information for the design of structures, systems and components..... YES ■ NO □
VERIFICATION: N/A □ HOU/SUP. ■ VERIFIER L1 □ L2 □
DOCUMENT PREPARED WITH CAD DO NOT MODIFY MANUALLY

PUBLIC POWER CORPORATION
LAVRION V CC PP
DMKT 11 21 302

METKA
EMPRESARIOS AGRUPADOS

LP AND LP BYPASS STEAM SYSTEM
PIPING ISOMETRIC

METKA DWG.No.	--	DIN A2
KKS DWG.No.	413-5-LB-JDI-EA-231	SCALE --
EA DWG.No.	413-5-D-J-70231	SHEET 4 CONT. 5

413-5-D-J-70231-004-03

AA1
15 OCT 2004

0 100 200 mm

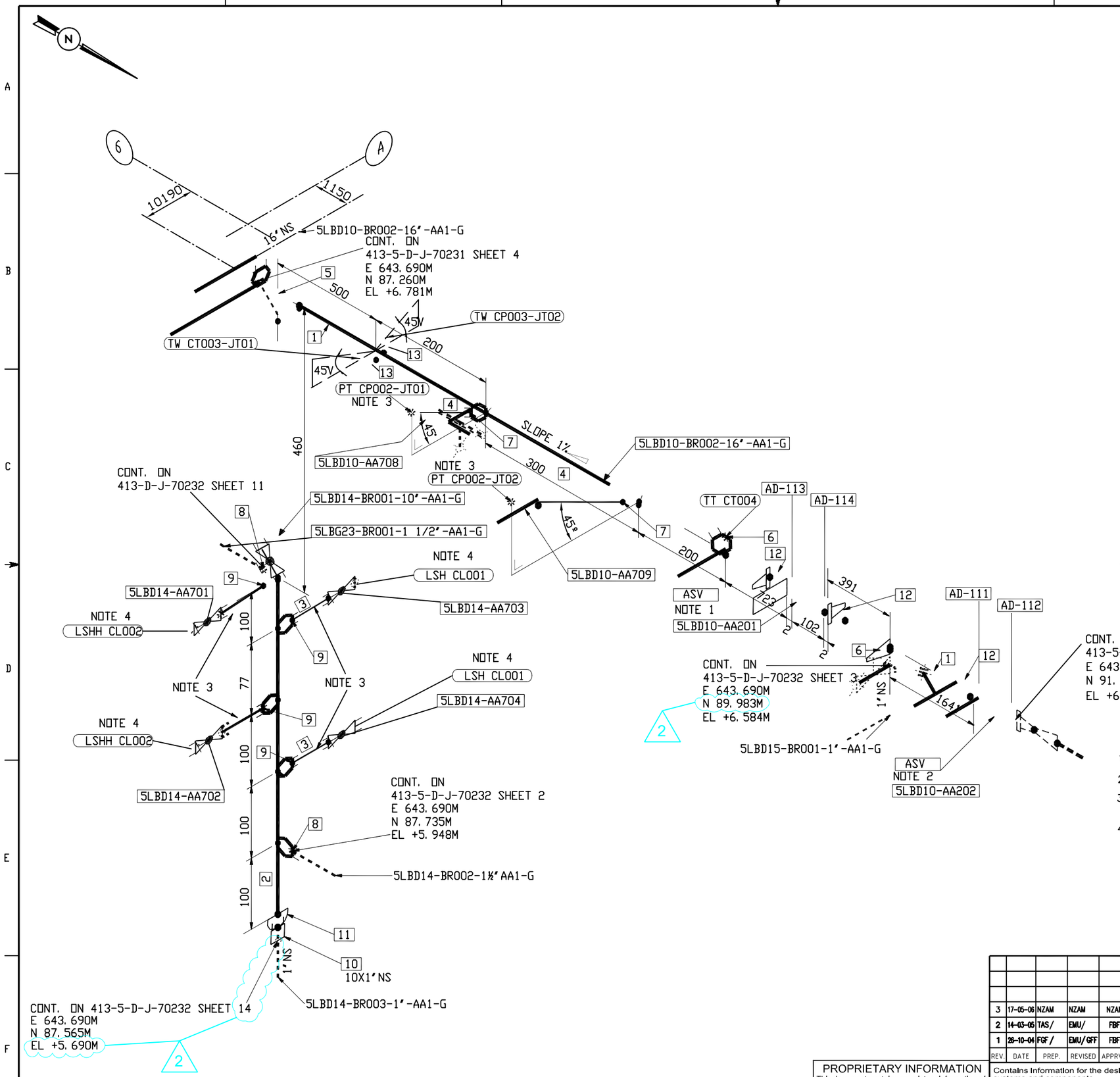

MATERIAL LIST

Nº	(Inch.)	DESCRIPTION / MATERIAL	QTY.
1	16	PIPE, S-STD, BE,.....ASTM-A106-GrB	3.2 M
2	10	PIPE, S- 40, BE,.....ASTM-A106-GrB	0.7 M
3	1	PIPE, S-80 , PE,.....ASTM-A106-GrB	0.4 M
4	3/4	PIPE, S-80 , PE,.....ASTM-A106-GrB	0.4 M
5	16X10	REDUCER TEE, S-STD x S-40, BE,.....ASTM-A234-WPB	1
6	16X1	SOCKOLET, CL3000, BE/SWE,.....ASTM-A105	2
7	16X3/4	SOCKOLET, CL3000, BE/SWE,.....ASTM-A105	2
8	10X1.1/2	SOCKOLET, CL3000, BE/SWE,.....ASTM-A105	2
9	10X1	SOCKOLET, CL3000, BE/SWE,.....ASTM-A105	4
10	10X1	HALF COUPLING, CL3000, SWE,.....ASTM-A105	1
11	10	CAP, S-40, BE,.....ASTM-A234-WPB	1
12	16	FLANGE WN, CL150, S-STD, FFFE/BE,.....ASTM-A105	3
13	16X1	SOCKOLET, CL3000, BE/SWE,.....ASTM-A105	2

REFERENCE DRAWINGS

Piping Composite	P&ID Nº.
413-5-D-M-60151 SH2	413-5-DT-M-10200 SH2

NOTES:

1.– SEE GE DRAWING 211D6108 FOR 5LBD10–AA201

2.– SEE GE DRAWING 211D6169 FOR 5LBD10–AA202

3.– 3" LONG PIECE OF PIPE PLUS THE LENGTH CORRESPONDING TO THE INSULATION THICKNESS

4.– LSH & LSHH PIPES MUST BE INSTALLED COMPLETELY HORIZONTAL

LINES No. = 5LBD14-BR001-10"-AA1-G
5LBD10-BR002-16"-AA1-G

REV.	DATE	PREP.	REVISED	APPRVD.	ISSUED FOR
3	17-05-06	NZAM	NZAM	NZAM	AS BUILT
2	14-03-05	TAS/	EMU/	FBF	CONSTRUCTION
1	26-10-04	FGF/	EMU/GFF	FBF	CONSTRUCTION

PROPRIETARY INFORMATION
This document contains proprietary information of Empresarios Agrupados Internacional,S.A. and is to be used solely for the Project and the purpose for which it is furnished. It may not be disclosed to others for a different use without the written permission of Empresarios Agrupados Internacional,S.A.

Contains Information for the design of structures, systems and components..... YES ■ NO □
VERIFICATION: N/A □ HOU/SUP. ■ VERIFIER L1 □ L2 □
DOCUMENT PREPARED WITH CAD DO NOT MODIFY MANUALLY

PUBLIC POWER CORPORATION
LAVRION V CC PP
DMKT 11 21 302

METKA
EMPRESARIOS AGRUPADOS

LP AND LP BYPASS STEAM SYSTEM
PIPING ISOMETRIC

METKA DWG.No.	--	DIN A2
KKS DWG.No.	413-5-LB-JDI-EA-231	SCALE --
EA DWG.No.	413-5-D-J-70231	SHEET 5 CONT. 6

413-5-D-J-70231-005-03

AA1
15 OCT 2004

0 100 200 mm

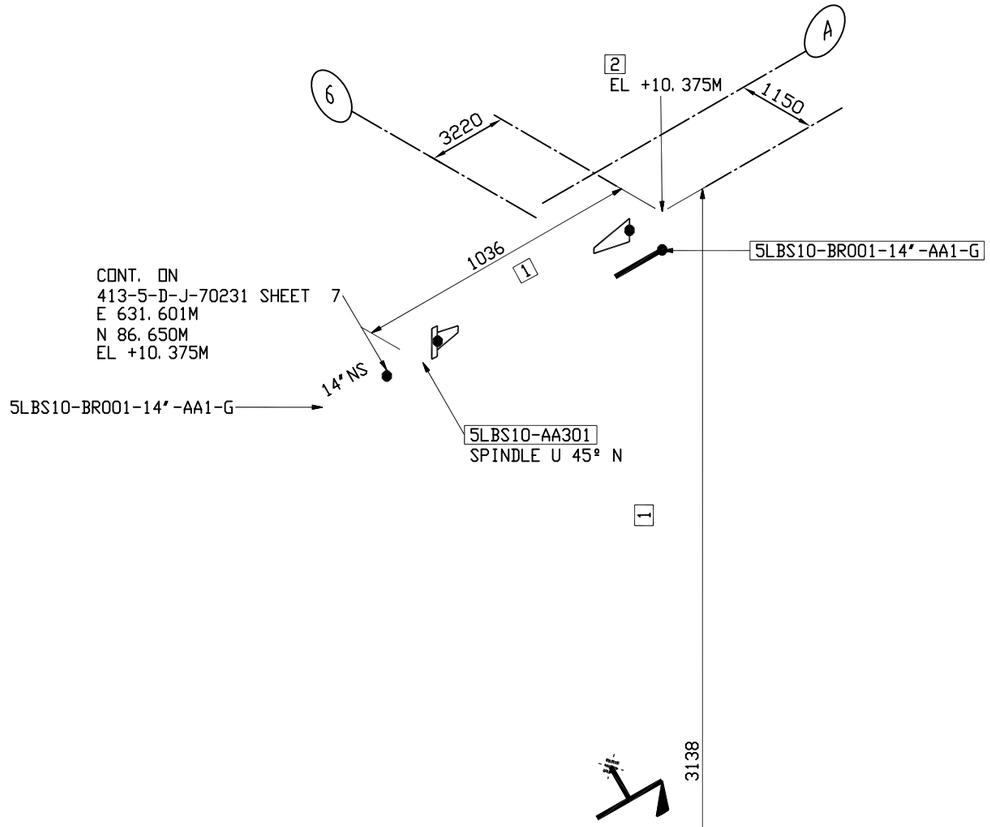

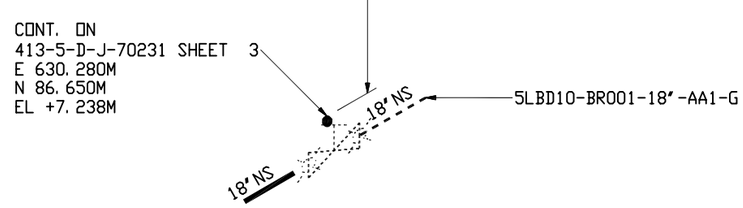

MATERIAL LIST

Nº	(Inch.)	DESCRIPTION / MATERIAL	QTY.
1	14	PIPE, S-STD, BE,.....ASTM-A106-GrB	2. 9 M
2	14	LR 90 GR ELBOW, S-STD, BE,.....ASTM-A234-WPB	1

REFERENCE DRAWINGS

Piping Composite	P&ID Nº.
413-5-D-M-60151 SH2	413-5-DT-M-10200 SH2
413-5-D-M-60152 SH2	

NOTES:

1.– THE LENGTHS OF THE STRAIGHT PIPE SECTIONS HAVE BEEN OBTAINED TAKING INTO ACCOUNT THE DISTANCE BETWEEN VALVE FACES ACCORDING TO STANDARD ANSI B16.10 FINAL DIMENSION SHALL BE DEFINED BY THE FABRICATOR BASED ON VALVE SUPPLIER DRAWINGS.

LINES No. =

5LBS10-BR001-14"-AA1-G

REV.	DATE	PREP.	REVISED	APPRVD.	ISSUED FOR
2	17-05-06	NZAM	NZAM	NZAM	AS BUILT
1	26-10-04	FGF /	EMU/ GFF	FBF	CONSTRUCTION

PUBLIC POWER CORPORATION

LAVRION V CC PP

DMKT 11 21 302

METKA

LP AND LP BYPASS STEAM SYSTEM PIPING ISOMETRIC

EMPRESARIOS AGRUPADOS

METKA DWG.No.	--	DIN A2
KKS DWG.No.	413-5-LB-JDI-EA-231	SCALE --
EA DWG.No.	413-5-D-J-70231	SHEET 6 CONT. 7

Contains Information for the design of structures, systems and components..... YES ■ NO □

VERIFICATION: N/A □ HOU/SUP. ■ VERIFIER L1 □ L2 □

DOCUMENT PREPARED WITH CAD DO NOT MODIFY MANUALLY

PROPRIETARY INFORMATION
This document contains proprietary information of Empresarios Agrupados Internacional,S.A. and is to be used solely for the Project and the purpose for which it is furnished. It may not be disclosed to others for a different use without the written permission of Empresarios Agrupados Internacional,S.A.

413-5-d-j-70231-006-02

AA1
15 OCT 2004

0 100 200 mm

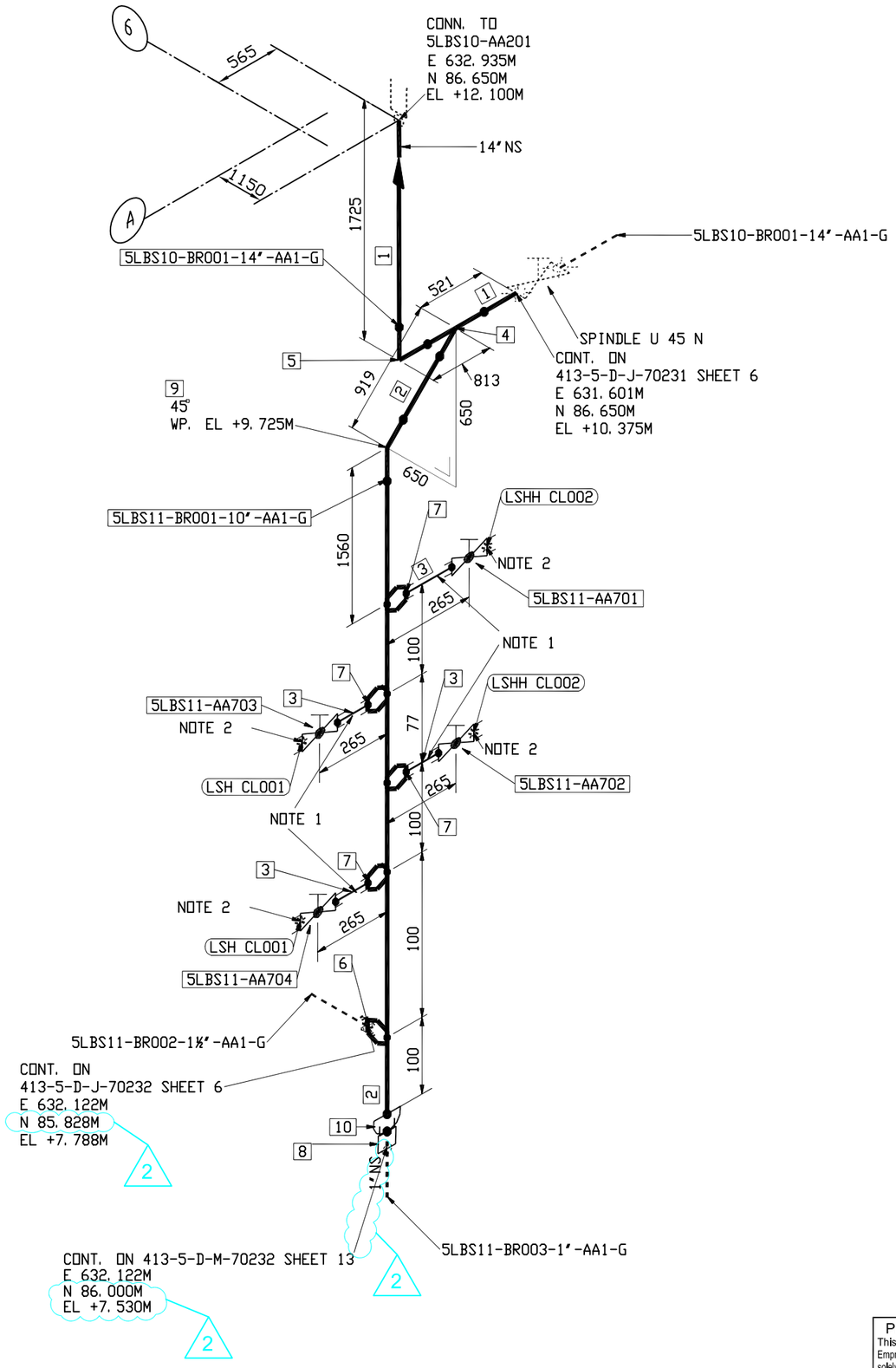

MATERIAL LIST

Nº	(Inch.)	DESCRIPTION / MATERIAL	QTY.
1	14	PIPE, S-STD, BE,.....ASTM-A106-GrB	1.5 M
2	10	PIPE, S- 40, BE,.....ASTM-A106-GrB	2.4 M
3	1	PIPE, S-80 , PE,.....ASTM-A106-GrB	0.3 M
4	14X10	REDUCER TEE, S-STD x S-40, BE, ...ASTM-A234-WPB	1
5	14	LR 90 GR ELBOW, S-STD, BE,.....ASTM-A234-WPB	1
6	10X1.1/2	SOCKOLET, CL3000, BE/SWE,.....ASTM-A105	1
7	10X1	SOCKOLET, CL3000, BE/SWE,.....ASTM-A105	4
8	10X1	HALF COUPLING, CL3000, SWE,.....ASTM-A105	1
9	10	LR 45 GR ELBOW, S-40, BE,.....ASTM-A234-WPB	1
10	10	CAP, S-40, BE,.....ASTM-A234-WPB	1

REFERENCE DRAWINGS

Piping Composite	P&ID Nº.
413-5-D-M-60151 SH2	413-5-DT-M-10200 SH2
413-5-D-M-60152 SH2	

NOTES:

1.– 3" LONG PIECE OF PIPE PLUS THE LENGTH CORRESPONDING TO THE INSULATION THICKNESS

2.– LSH & LSHH PIPES MUST BE INSTALLED COMPLETELY HORIZONTAL

3.– THE LENGTHS OF THE STRAIGHT PIPE SECTIONS HAVE BEEN OBTAINED TAKING INTO ACCOUNT THE DISTANCE BETWEEN VALVE FACES ACCORDING TO STANDARD ANSI B16.10 FINAL DIMENSION SHALL BE DEFINED BY THE FABRICATOR BASED ON VALVE SUPPLIER DRAWINGS.

LINES No. = 5LBS10-BR001-14"-AA1-G
5LBS11-BR001-10"-AA1-G

REV.	DATE	PREP.	REVISED	APPRVD.	ISSUED FOR
3	17-05-06	NZAM	NZAM	NZAM	AS BUILT
2	14-03-05	TAS/	EMU/	FBF	CONSTRUCTION
1	26-10-04	FGF/	EMU/GFF	FBF	CONSTRUCTION

PROPRIETARY INFORMATION
This document contains proprietary information of Empresarios Agrupados Internacional,S.A. and is to be used solely for the Project and the purpose for which it is furnished. It may not be disclosed to others for a different use without the written permission of Empresarios Agrupados Internacional,S.A.

Contains Information for the design of structures, systems and components..... YES ■ NO □
VERIFICATION: N/A □ HOU/SUP. ■ VERIFIER L1 □ L2 □
DOCUMENT PREPARED WITH CAD DO NOT MODIFY MANUALLY

PUBLIC POWER CORPORATION
LAVRION V CC PP
DMKT 11 21 302

METKA
EMPRESARIOS AGRUPADOS

LP AND LP BYPASS STEAM SYSTEM
PIPING ISOMETRIC

METKA DWG.No.	--	DIN A2	
KKS DWG.No.	413-5-LB-JDI-EA-231	SCALE	--
EA DWG.No.	413-5-D-J-70231	SHEET 7 CONT. 8	

413-5-D-J-70231-007-03

AA1
15 OCT 2004

0 100 200 mm

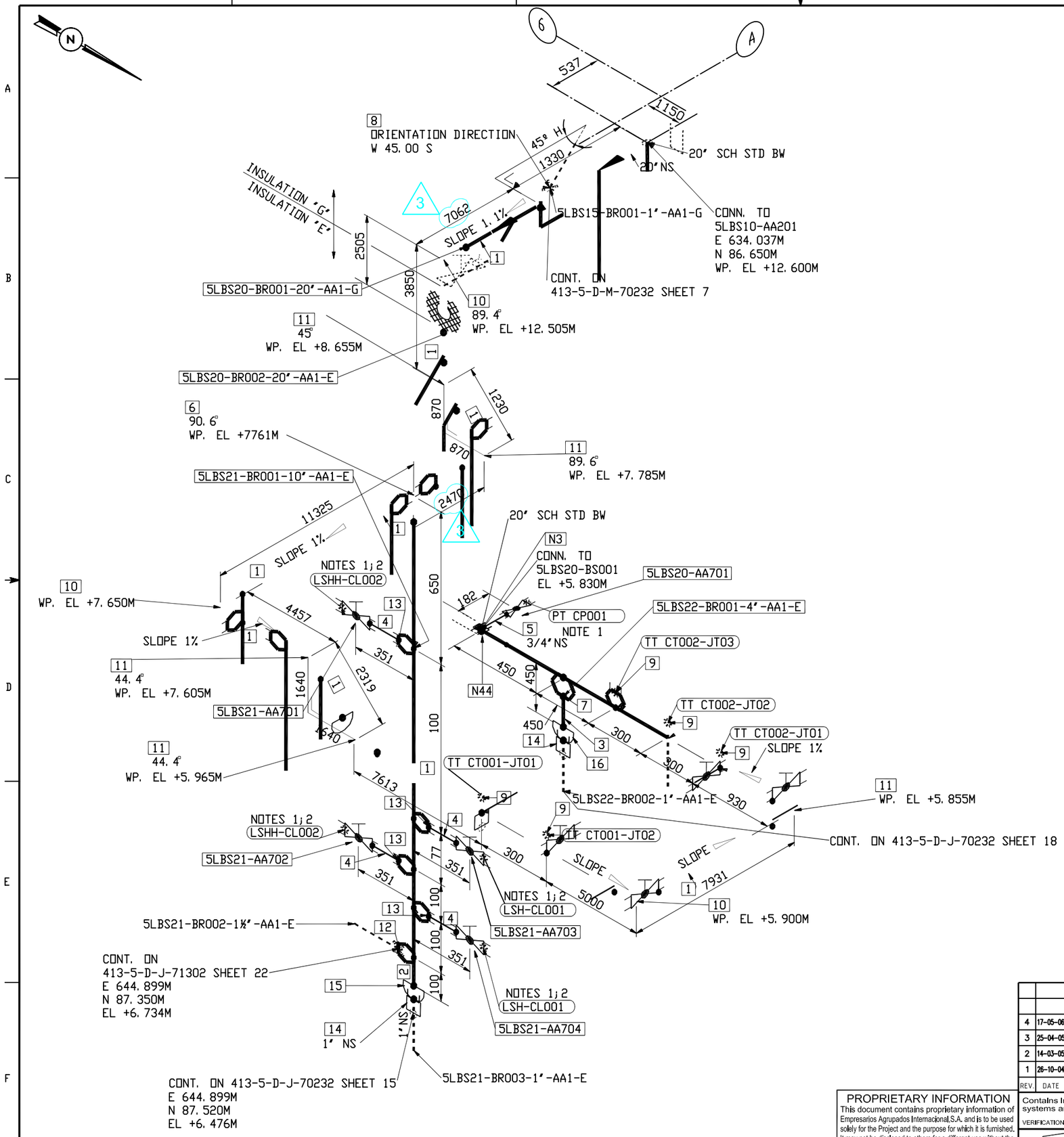

MATERIAL LIST

Nº	(Inch.)	DESCRIPTION / MATERIAL	QTY.
1	20	PIPE, S-STD, BE,.....ASTM-A106-GrB	48.9 M
2	10	PIPE, S- 40, BE,.....ASTM-A106-GrB	0.8 M
3	4	PIPE, S- 40, BE,.....ASTM-A106-GrB	0.2 M
4	1	PIPE, S-80 , PE,.....ASTM-A106-GrB	0.6 M
5	3/4	PIPE, S-80 , PE,.....ASTM-A106-GrB	0.1 M
6	20X10	REDUCER TEE, S-STD x S-40, BE,..... ASTM-A234-WPB	1
7	20X4	WELDOLET, S-STD x S-40, BE, ...ASTM-A105	1
8	20X1	LATROLET, CL3000, BE/SWE,.....ASTM-A105	1
9	20X1	SOCKOLET, CL3000, BE/SWE,.....ASTM-A105	5
10	20	LR 90 GR ELBOW, S-STD, BE,.....ASTM-A234-WPB	3
11	20	LR 45 GR ELBOW, S-STD, BE,.....ASTM-A234-WPB	5
12	10X1.1/2	SOCKOLET, CL3000, BE/SWE,.....ASTM-A105	1
13	10X1	SOCKOLET, CL3000, BE/SWE,.....ASTM-A105	4
14	1	HALF COUPLING, CL3000, SWE,.....ASTM-A105	2
15	10	CAP, S-40, BE,.....ASTM-A234-WPB	1
16	4	CAP, S-40, BE,.....ASTM-A234-WPB	1

REFERENCE DRAWINGS

Piping Composite	P&ID Nº.
413-5-D-M-60151 SH1	413-5-DT-M-10200 SH2
413-5-D-M-60151 SH2	
413-5-D-M-60152 SH2	

NOTES:

1.– 3" LONG PIECE OF PIPE PLUS THE LENGTH CORRESPONDING TO THE INSULATION THICKNESS

2.– LSH & LSHH PIPES MUST BE INSTALLED COMPLETELY HORIZONTAL

LINES No. = 5LBS22-BR001-4"-AA1-E
5LBS20-BR001-20"-AA1-G
5LBS20-BR002-20"-AA1-E
5LBS21-BR001-10"-AA1-E

REV.	DATE	PREP.	REVISED	APPRVD.	ISSUED FOR
4	17-05-06	NZAM	NZAM	NZAM	AS BUILT
3	25-04-05	TAS	EMU	EMU	CONSTRUCTION
2	14-03-05	TAS/	EMU/	FBF	CONSTRUCTION
1	26-10-04	FGF/	EMU/GFF	FBF	CONSTRUCTION

PUBLIC POWER CORPORATION

LAVRION V CC PP
DMKT 11 21 302

METKA

LP AND LP BYPASS STEAM SYSTEM
PIPING ISOMETRIC

EMPRESARIOS AGRUPADOS

METKA DWG.No. --
KKS DWG.No. 413-5-LB-JDI-EA-231
EA DWG.No. 413-5-D-J-70231
DIN A2
SCALE --
SHEET 7 CONT. 8

Contains Information for the design of structures, systems and components..... YES ■ NO □
VERIFICATION: N/A □ HOU/SUP. ■ VERIFIER L1 □ L2 □

DOCUMENT PREPARED WITH CAD
DO NOT MODIFY MANUALLY

PROPRIETARY INFORMATION
This document contains proprietary information of Empresarios Agrupados Internacional,S.A. and is to be used solely for the Project and the purpose for which it is furnished. It may not be disclosed to others for a different use without the written permission of Empresarios Agrupados Internacional,S.A.

413-5-D-J-70231-008-04

AA1
18 OCT 2004

0 100 200 mm

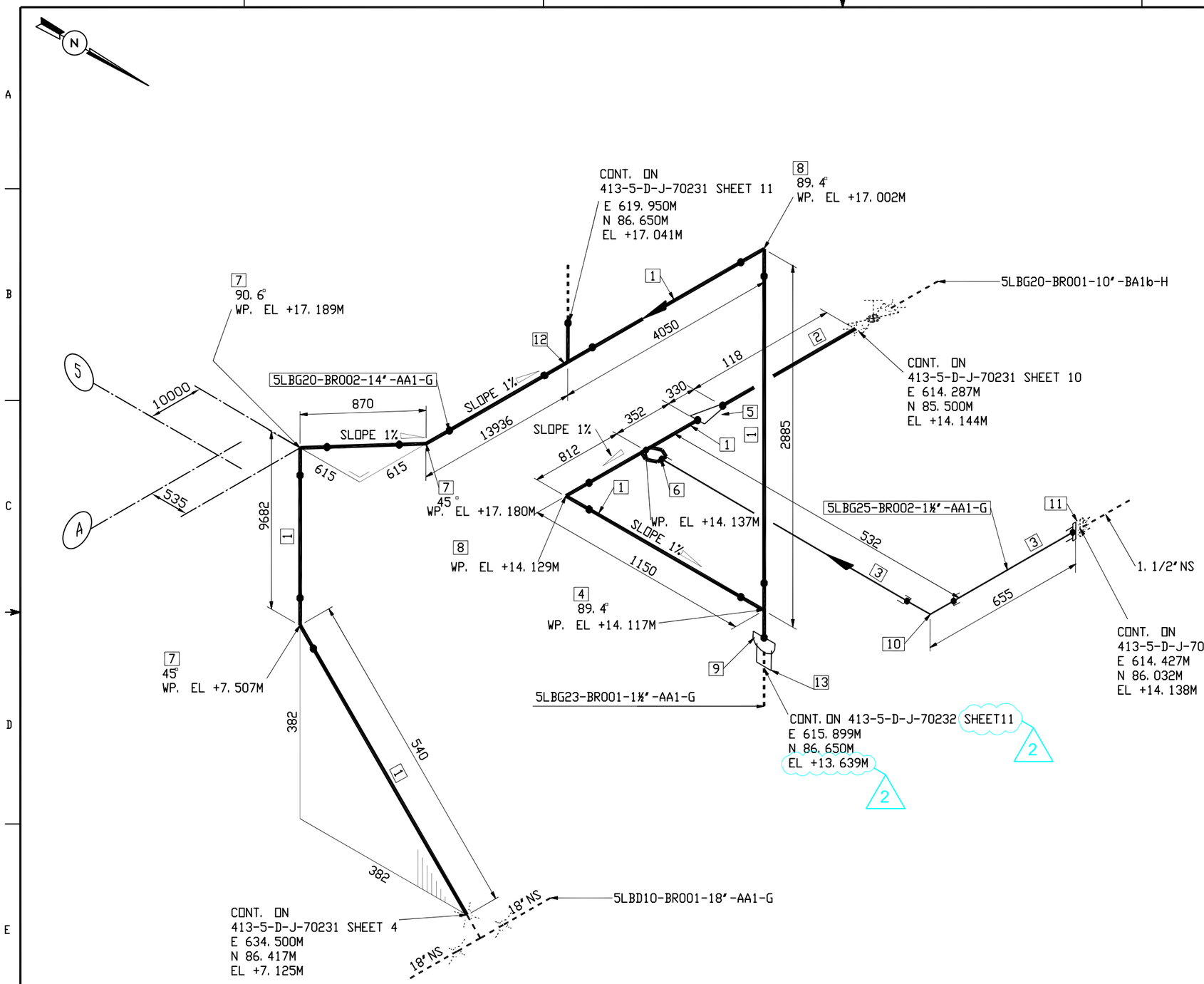

MATERIAL LIST

№	(Inch.)	DESCRIPTION / MATERIAL	QTY.
1	14	PIPE, S-STD, BE,.....ASTM-A106-GrB	30.3 M
2	10	PIPE, S- 40, BE,.....ASTM-A106-GrB	0.2 M
3	1.1/2	PIPE, S-80 , PE,.....ASTM-A106-GrB	1.0 M
4	14X14	TEE, S-STD, BE,.....ASTM-A234-WPB	1
5	14X10	CONC. REDUCER, S-STD x S-40, BE,.....ASTM-A234-WPB	1
6	14X1.1/2	SOCKOLET, CL3000, BE/SWE,.....ASTM-A105	1
7	14	LR 45 GR ELBOW, S-STD, BE,.....ASTM-A234-WPB	3
8	14	LR 90 GR ELBOW, S-STD, BE,.....ASTM-A234-WPB	2
9	14	CAP, S-STD, BE,.....ASTM-A234-WPB	1
10	1.1/2	LR 90 GR ELBOW, CL3000, SWE,.....ASTM-A105	1
11	1.1/2	FLANGE SW, CL300, RFFE/SWE,.....ASTM-A105	1
12	14x6	REDUCER, TEE S-STD x S-4, BE,.....ASTM-A234-WPB	1
13	1 1/2	HALF COUPLING, CL 3000, SWE,.....ASTM-A105	1

REFERENCE DRAWINGS

Piping Composite	P&ID №.
413-5-D-M-60151 SH2	413-5-DT-M-10200 SH2
413-5-D-M-60152 SH2	

LINES No. = 5LBG25-BR002-1½"-AA1-G
5LBG20-BR002-14"-AA1-G

REV.	DATE	PREP.	REVISED	APPRVD.	ISSUED FOR
3	17-05-06	NZAM	NZAM	NZAM	AS BUILT
2	14-03-05	TAS	EMU	FBF	CONSTRUCTION
1	26-10-04	FGF /	EMU/ GFF	FBF	CONSTRUCTION

PROPRIETARY INFORMATION
This document contains proprietary information of Empresarios Agrupados Internacional,S.A. and is to be used solely for the Project and the purpose for which it is furnished. It may not be disclosed to others for a different use without the written permission of Empresarios Agrupados Internacional,S.A.

Contains Information for the design of structures, systems and components..... YES ■ NO □
VERIFICATION: N/A □ HOU/SUP. ■ VERIFIER L1 □ L2 □
DOCUMENT PREPARED WITH CAD DO NOT MODIFY MANUALLY

PUBLIC POWER CORPORATION
LAVRION V CC PP
DMKT 11 21 302

METKA

LP AND LP BYPASS STEAM SYSTEM PIPING ISOMETRIC

EMPRESARIOS AGRUPADOS

METKA DWG.No.	--	DIN A2
KKS DWG.No.	413-5-LB-JDI-EA-231	SCALE --
EA DWG.No.	413-5-D-J-70231	SHEET 9 CONT. 10

413-5-D-J-70231-009-03

AA1
18 OCT 2004

0 100 200 mm

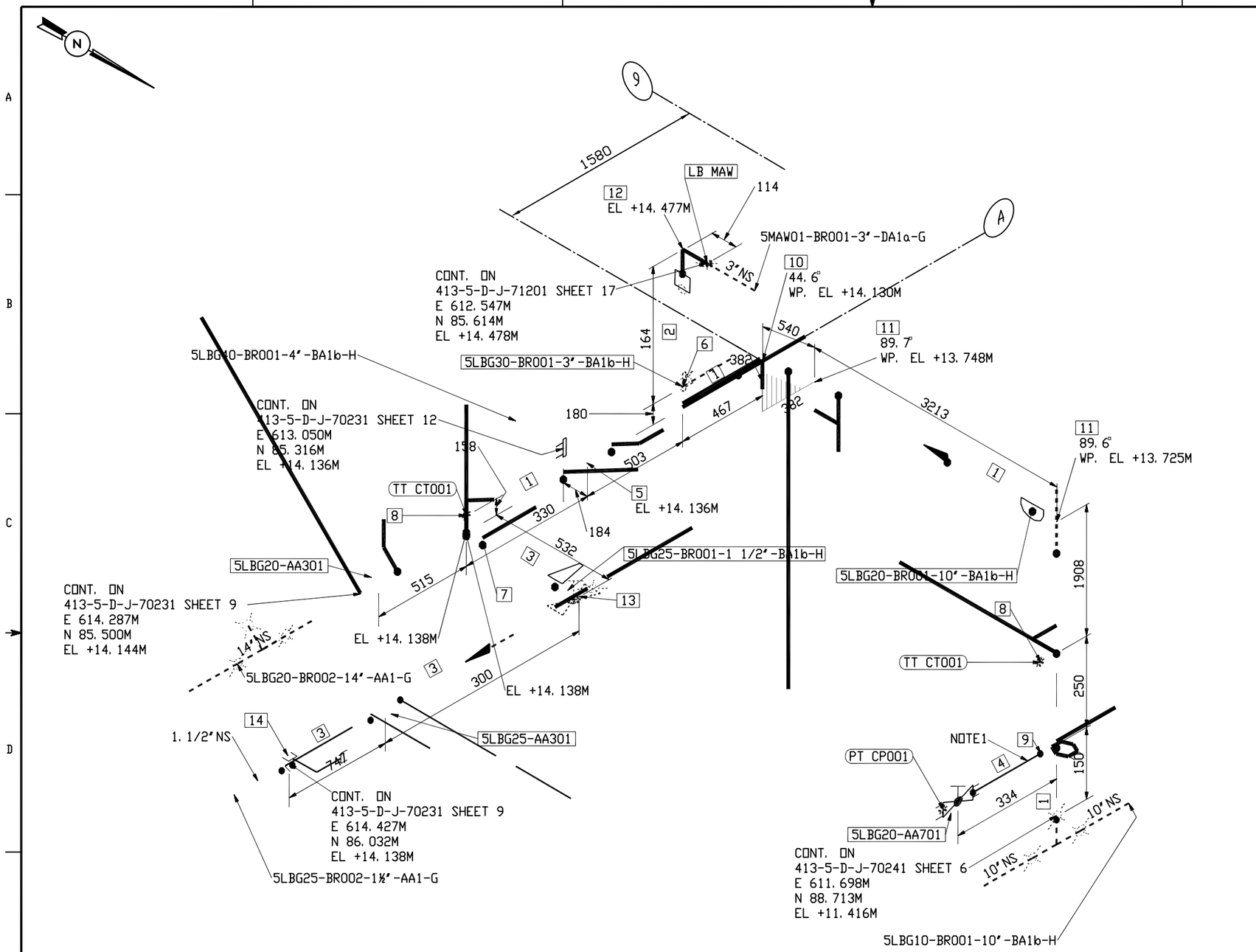

MATERIAL LIST

Nº	(Inch.)	DESCRIPTION / MATERIAL	QTY.
1	10	PIPE, S-60, BE,.....ASTM-A106-GrB	5. 3 M
2	3	PIPE, S-80, BE,.....ASTM-A106-GrB	0. 1 M
3	1. 1/2	PIPE, S-80 , PE,.....ASTM-A106-GrB	1. 3 M
4	3/4	PIPE, S-80 , PE,.....ASTM-A106-GrB	0. 2 M
5	10X4	REDUCER TEE, S-60 x S-80, BE,.....ASTM-A234-WPB	1
6	10X3	WELDOLET, S-60 x S-80, BE,.....ASTM-A105	1
7	10X1. 1/2	SOCKOLET, CL3000, BE/SWE,.....ASTM-A105	1
8	10X1	SOCKOLET, CL3000, BE/SWE,.....ASTM-A105	2
9	10X3/4	SOCKOLET, CL3000, BE/SWE,.....ASTM-A105	1
10	10	LR 45 GR ELBOW, S-60, BE,.....ASTM-A234-WPB	1
11	10	LR 90 GR ELBOW, S-60, BE,.....ASTM-A234-WPB	2
12	3	LR 90 GR ELBOW, S-80, BE,.....ASTM-A234-WPB	1
13	1. 1/2	90 GR ELBOW, CL3000, SWE,.....ASTM-A105	1
14	1. 1/2	FLANGE SW, CL300, RFFE/SWE,.....ASTM-A105	1

REFERENCE DRAWINGS	
Piping Composite	P&ID Nº.
413-5-D-M-60152 SH2	413-5-DT-M-10200 SH2

NOTES:

1.– 3" LONG PIECE OF PIPE PLUS THE LENGTH CORRESPONDING TO THE INSULATION THICKNESS

2.– THE LENGTHS OF THE STRAIGHT PIPE SECTIONS HAVE BEEN OBTAINED TAKING INTO ACCOUNT THE DISTANCE BETWEEN VALVE FACES ACCORDING TO STANDARD ANSI B16.10 FINAL DIMENSION SHALL BE DEFINED BY THE FABRICATOR BASED ON VALVE SUPPLIER DRAWINGS.

LINES No. = 5LBG20-BR001-10"-BA1b-H
5LBG30-BR001-3"-BA1b-H
5LBG25-BR001-1½"-BA1b-H

REV.	DATE	PREP.	REVISED	APPRVD.	ISSUED FOR
2	17-05-06	NZAM	NZAM	NZAM	AS BUILT
1	26-10-04	FGF /	EMU/GFF	FBF	CONSTRUCTION

PROPRIETARY INFORMATION
This document contains proprietary information of Empresarios Agrupados Internacional,S.A. and is to be used solely for the Project and the purpose for which it is furnished. It may not be disclosed to others for a different use without the written permission of Empresarios Agrupados Internacional,S.A.

Contains Information for the design of structures, systems and components..... YES ■ NO □
VERIFICATION: N/A □ HOU/SUP. ■ VERIFIER L1 □ L2 □
DOCUMENT PREPARED WITH CAD DO NOT MODIFY MANUALLY

PUBLIC POWER CORPORATION
LAVRION V CC PP
DMKT 11 21 302

METKA

LP AND LP BYPASS STEAM SYSTEM
PIPING ISOMETRIC

EMPRESARIOS AGRUPADOS

METKA DWG.No.	--	DIN A2
KKS DWG.No.	413-5-LB-JDI-EA-231	SCALE --
EA DWG.No.	413-5-D-J-70231	SHEET 10 CONT. 11

413-5-D-J-70231-010-02

BA1B
28 OCT 2004

0 100 200 mm

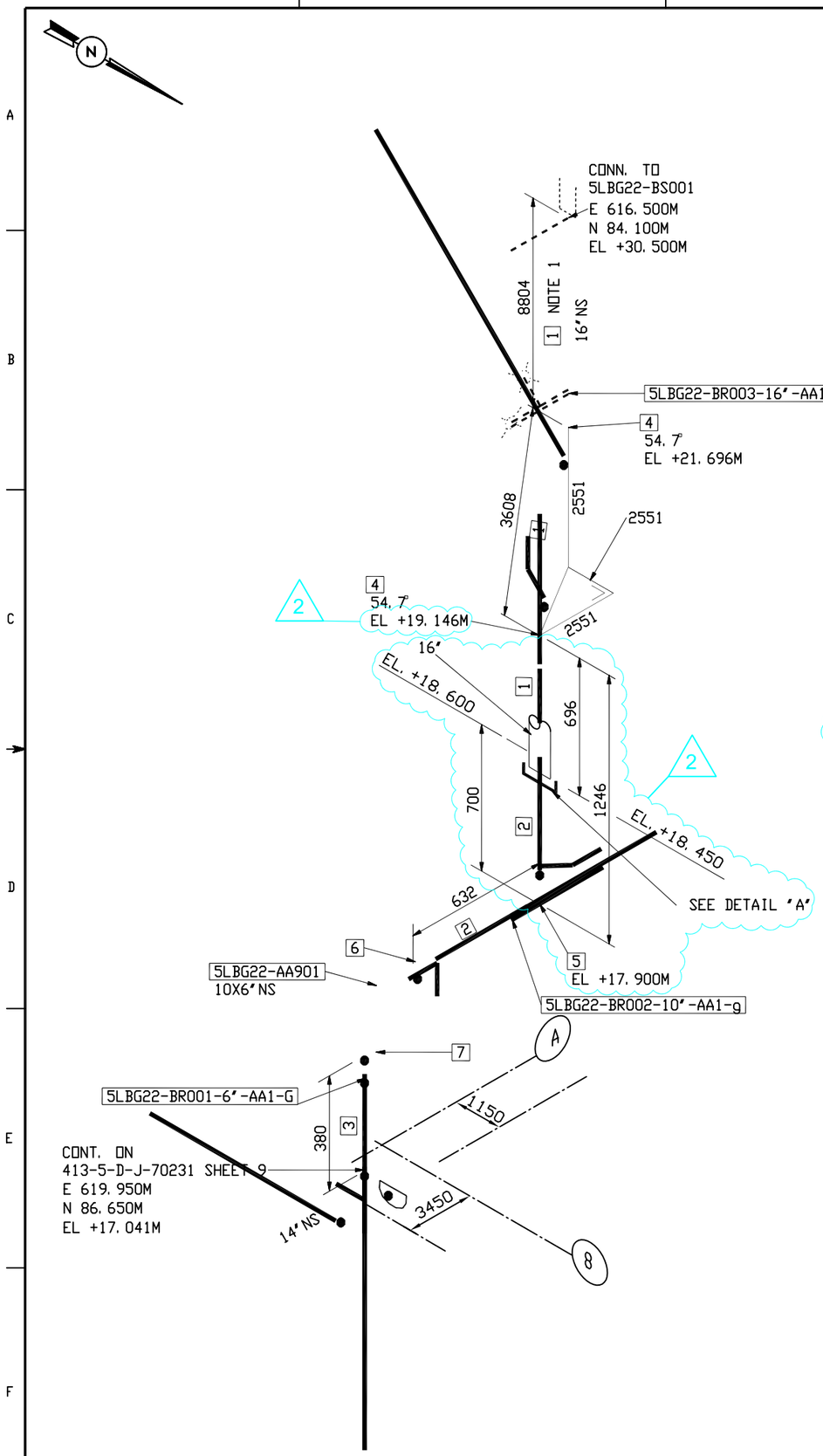

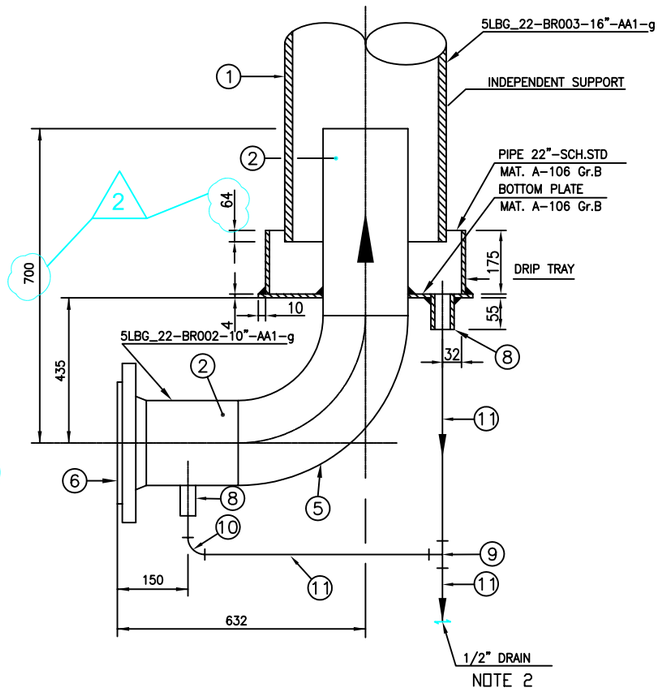

DETAIL "A"
DRIP TRAY

MATERIAL LIST

Nº	(Inch.)	DESCRIPTION / MATERIAL	QTY.
1	16	PIPE, S-STD, BE,.....ASTM-A106-GrB	12.7 M
2	10	PIPE, S- 40, BE,.....ASTM-A106-GrB	0.6 M
3	6	PIPE, S- 40, BE,.....ASTM-A106-GrB	0.3 M
4	16	LR 45 GR ELBOW, S-STD, BE,.....ASTM-A234-WPB	2
5	10	LR 90 GR ELBOW, S-40, BE,.....ASTM-A234-WPB	1
6	10	FLANGE WN, CL150, RFFE/BE,.....ASTM-A105	1
7	6	FLANGE WN, CL150, RFFE/BE,.....ASTM-A105	1
8	1/2	HALF COUPLING, CL3000, SWE.....ASTM-A105	2
9	1/2	TEE SW,, CL3000,.....ASTM-A105	1
10	1/2	LR 90 Gr ELBOW, SW, CL3000, ,.....ASTM-A105	1
11	1/2	PIPE, S-80, PE.....ASTM-A106 Gr B	0.6 M

SEE NOTE 2

REFERENCE DRAWINGS

Piping Composite	P&ID Nº.
413-5-D-M-60152 SH2	413-5-DT-M-10200 SH2
413-5-D-M-60152 SH7	

NOTES:

1.– THIS MEASUREMENT IS AN ESTIMATE. THE FINAL DIMENSIONS WILL BE DETERMINED BY THE FABRICATOR ONCE THE SILENCER SUPPLIER'S DRAWINGS HAVE BEEN RECEIVED.

2.– CONVEY THE DRAIN TO THE NEAREST PIT IN THE GROUND. THE PIPING LAYOUT WILL BE DEFINED AT SITE. THE LIST OF THE COMPONENTS AND THEIR CONFIGURATIONS IS ONLY INDICATIVE.

3.– THE LENGHTS OF THE STRAIGTH PIPE SECTIONS HAVE BEEN OBTAINED TAKING INTO ACCOUNT THE DISTANCE BETWEEN VALVE FACES ACCORDING TO STANDARD ANSI B16.10 FINAL DIMENSION SHALL BE DEFINED BY THE FABRICATOR BASED ON VALVE SUPPLIER DRAWINGS.

LINES No. = 5LBG22-BR001-6"-AA1-G
5LBG22-BR002-10"-AA1-G
5LBG22-BR003-16"-AA1-G

REV.	DATE	PREP.	REVISED	APPRVD.	ISSUED FOR
3	17-05-06	NZAM	NZAM	NZAM	AS BUILT
2	14-03-05	TAS	EMU	FBF	CONSTRUCTION
1	29-10-04	FGF /	EMU/ GFF	FBF	CONSTRUCTION

PROPRIETARY INFORMATION
This document contains proprietary information of Empresarios Agrupados Internacional,S.A. and is to be used solely for the Project and the purpose for which it is furnished. It may not be disclosed to others for a different use without the written permission of Empresarios Agrupados Internacional,S.A.

Contains Information for the design of structures, systems and components..... YES ■ NO □
VERIFICATION: N/A □ HOU/SUP. ■ VERIFIER L1 □ L2 □
DOCUMENT PREPARED WITH CAD DO NOT MODIFY MANUALLY

PUBLIC POWER CORPORATION
LAVRION V CC PP
DMKT 11 21 302

METKA
EMPRESARIOS AGRUPADOS

LP AND LP BYPASS STEAM SYSTEM
PIPING ISOMETRIC

METKA DWG.No.	--	DIN A2
KKS DWG.No.	413-5-LB-JDI-EA-231	SCALE --
EA DWG.No.	413-5-D-J-70231	SHEET 11 CONT. 12

413-5-D-J-70231-011-03

BA1B
28 OCT 2004

0 100 200 mm

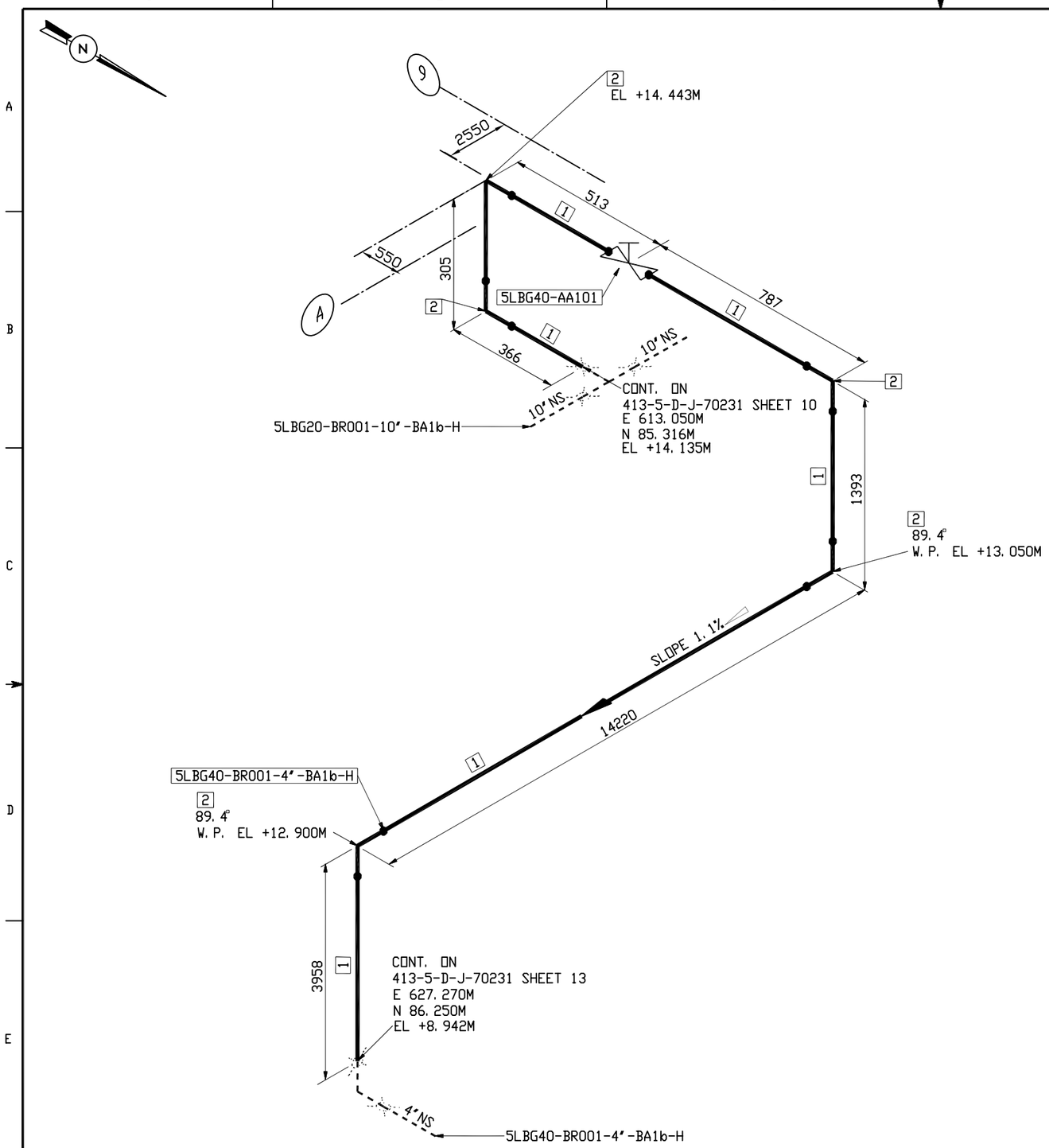

MATERIAL LIST

Nº	(Inch.)	DESCRIPTION / MATERIAL	QTY.
1	4	PIPE, S-80, BE,.....ASTM-A106-GrB	19.8 M
2	4	LR 90 GR ELBOW, S-80, BE,.....ASTM-A234-WPB	5

REFERENCE DRAWINGS

Piping Composite	P&ID Nº.
413-5-D-M-60151 SH2	413-5-DT-M-10200 SH2
413-5-D-M-60152 SH2	

NOTES:

1.– THE LENGTHS OF THE STRAIGHT PIPE SECTIONS HAVE BEEN OBTAINED TAKING INTO ACCOUNT THE DISTANCE BETWEEN VALVE FACES ACCORDING TO STANDARD ANSI B16.10 FINAL DIMENSION SHALL BE DEFINED BY THE FABRICATOR BASED ON VALVE SUPPLIER DRAWINGS.

LINES No. =

5LBG40-BR001-4"-BA1b-H

REV.	DATE	PREP.	REVISED	APPRVD.	ISSUED FOR
2	17-05-06	NZAM	NZAM	NZAM	AS BUILT
1	26-10-04	FGF /	EMU/GFF	FBF	CONSTRUCTION

PROPRIETARY INFORMATION

This document contains proprietary information of Empresarios Agrupados Internacional,S.A. and is to be used solely for the Project and the purpose for which it is furnished. It may not be disclosed to others for a different use without the written permission of Empresarios Agrupados Internacional,S.A.

Contains Information for the design of structures, systems and components..... YES ■ NO □

VERIFICATION: N/A □ HOU/SUP. ■ VERIFIER L1 □ L2 □

DOCUMENT PREPARED WITH CAD DO NOT MODIFY MANUALLY

PUBLIC POWER CORPORATION

LAVRION V CC PP

DMKT 11 21 302

METKA

EMPRESARIOS AGRUPADOS

LP AND LP BYPASS STEAM SYSTEM PIPING ISOMETRIC

METKA DWG.No.	--	DIN A2	
KKS DWG.No.	413-5-LB-JDI-EA-231	SCALE	--
EA DWG.No.	413-5-D-J-70231	SHEET 12 CONT. 13	

413-5-D-J-70231-012-02

BA1B
19 OCT 2004

0 100 200 mm

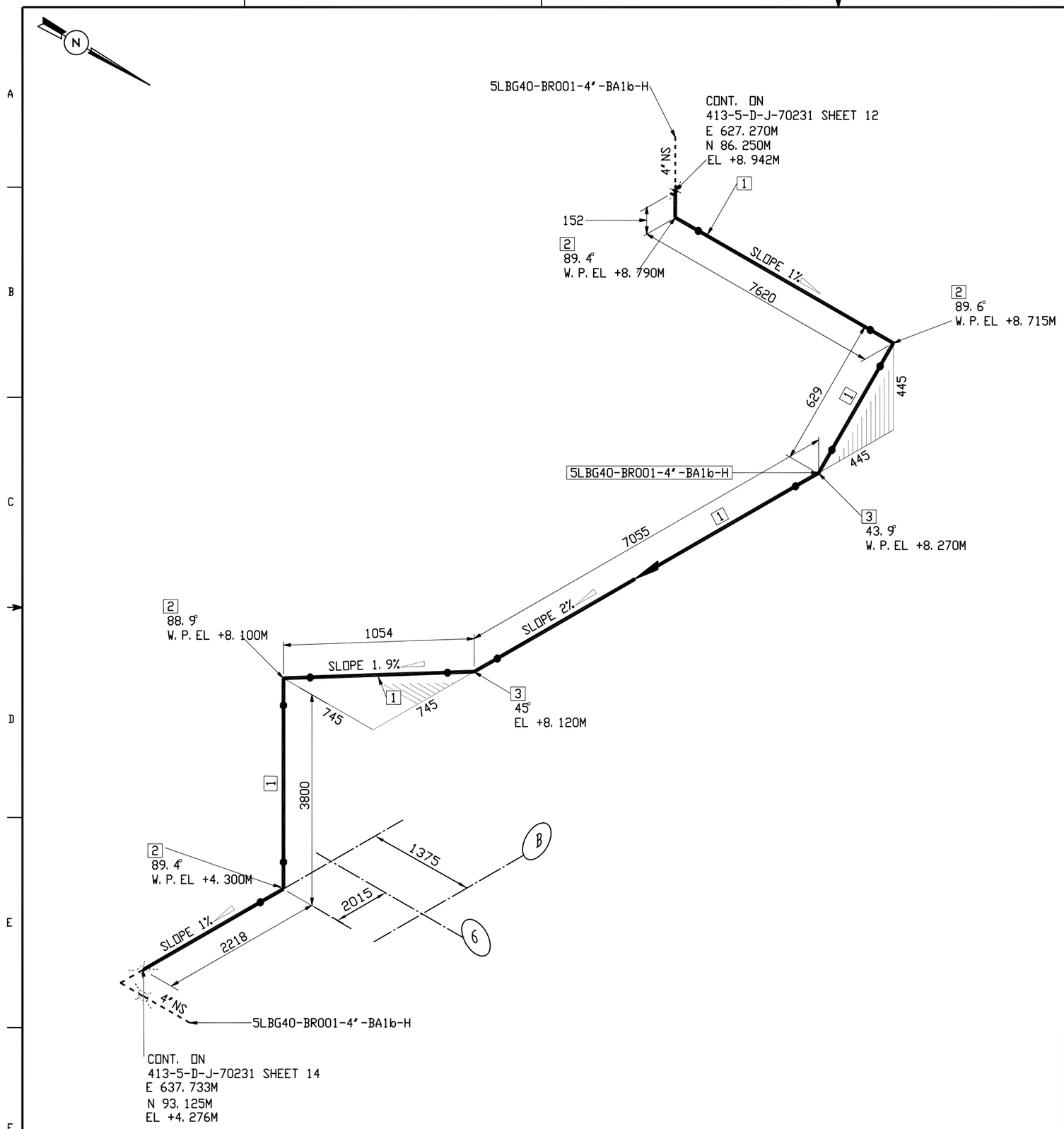

MATERIAL LIST

№	(Inch.)	DESCRIPTION / MATERIAL	QTY.
1	4	PIPE, S-80, BE,.....ASTM-A106-GrB	21.2 M
2	4	LR 90 GR ELBOW, S-80, BE,.....ASTM-A234-WPB	4
3	4	LR 45 GR ELBOW, S-80, BE,.....ASTM-A234-WPB	2

REFERENCE DRAWINGS

Piping Composite	P&ID №.
413-5-D-M-60150 SH2	413-5-DT-M-10200 SH2
413-5-D-M-60151 SH2	

LINES No. =

5LBG40-BR001-4"-BA1b-H

REV.	DATE	PREP.	REVISED	APPRVD.	ISSUED FOR
2	17-05-06	NZAM	NZAM	NZAM	AS BUILT
1	26-10-04				CONSTRUCTION

PUBLIC POWER CORPORATION

LAVRION V CC PP

DMKT 11 21 302

METKA

LP AND LP BYPASS STEAM SYSTEM
PIPING ISOMETRIC

EMPRESARIOS AGRUPADOS

METKA DWG.No. --

DIN A2

KKS DWG.No. 413-5-LB-JDI-EA-231

SCALE --

EA DWG.No. 413-5-D-J-70231

SHEET 13 CONT. 14

Contains Information for the design of structures, systems and components..... YES ☒ NO ☐

VERIFICATION: N/A ☐ HOU/SUP. ☒ VERIFIER L1 ☐ L2 ☐

DOCUMENT PREPARED WITH CAD
DO NOT MODIFY MANUALLY

PROPRIETARY INFORMATION
This document contains proprietary information of Empresarios Agrupados Internacional,S.A. and is to be used solely for the Project and the purpose for which it is furnished. It may not be disclosed to others for a different use without the written permission of Empresarios Agrupados Internacional,S.A.

413-5-d-j-70231-013-02

BA1B
19 OCT 2004

0 100 200 mm

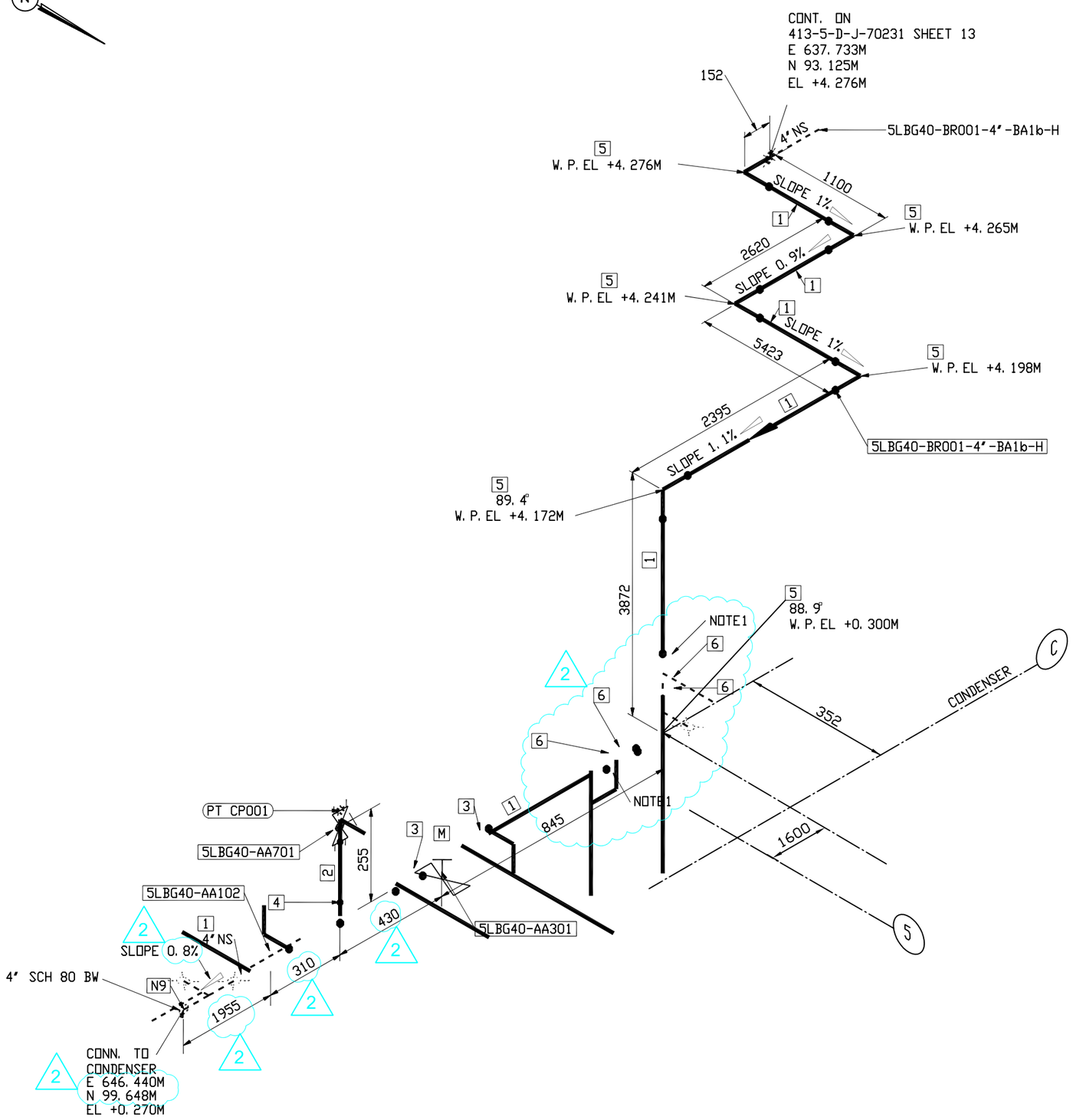

MATERIAL LIST

Nº	(Inch.)	DESCRIPTION / MATERIAL	QTY.
1	4	PIPE, S-80, BE,.....ASTM-A106-GrB	15.2 M
2	3/4	PIPE, S-80 , PE,.....ASTM-A106-GrB	0.2 M
3	4X3	CONC. REDUCER, S-80 x S-80, BE,.....ASTM-A234-WPB	2
4	4X3/4	SOCKOLET, CL3000, BE/SWE,.....ASTM-A105	1
5	4	LR 90 GR ELBOW, S-80, BE,.....ASTM-A234-WPB	6
6	4	FLANGE WN, CL300, S-80, RFFE/BE,.....ASTM-A105	4

REFERENCE DRAWINGS

Piping Composite	P&ID Nº.
413-5-D-M-60150 SH1	413-5-DT-M-10200 SH2
413-5-D-M-60150 SH2	

NOTES:

1.– BLOW-OFF FLANGE
2.– THE LENGTHS OF THE STRAIGHT PIPE SECTIONS HAVE BEEN OBTAINED TAKING INTO ACCOUNT THE DISTANCE BETWEEN VALVE FACES ACCORDING TO STANDARD ANSI B16.10 FINAL DIMENSION SHALL BE DEFINED BY THE FABRICATOR BASED ON VALVE SUPPLIER DRAWINGS.

LINES No. =
5LBG40-BR001-4"-BA1b-H

REV.	DATE	PREP.	REVISED	APPRVD.	ISSUED FOR
3	06-05-17	NZAM	NZAM	NZAM	AS BUILT
2	05-09-08	TAS	JEV	FBF	CONSTRUCTION
1	06-10-06	FGF /	EMU/GFF	FBF	CONSTRUCTION

PROPRIETARY INFORMATION
This document contains proprietary information of Empresarios Agrupados Internacional,S.A. and is to be used solely for the Project and the purpose for which it is furnished. It may not be disclosed to others for a different use without the written permission of Empresarios Agrupados Internacional,S.A.

Contains Information for the design of structures, systems and components..... YES ■ NO □
VERIFICATION: N/A □ HOU/SUP. ■ VERIFIER L1 □ L2 □
DOCUMENT PREPARED WITH CAD DO NOT MODIFY MANUALLY

PUBLIC POWER CORPORATION
LAVRION V CC PP
DMKT 11 21 302

METKA

LP AND LP BYPASS STEAM SYSTEM
PIPING ISOMETRIC

EMPRESARIOS AGRUPADOS

METKA DWG.No.	--	DIN A2
KKS DWG.No.	413-5-LB-JDI-EA-231	SCALE --
EA DWG.No.	413-5-D-J-70231	SHEET 14 CONT. 15

413-5-d-j-70231-014-03

BA1B
19 OCT 2004

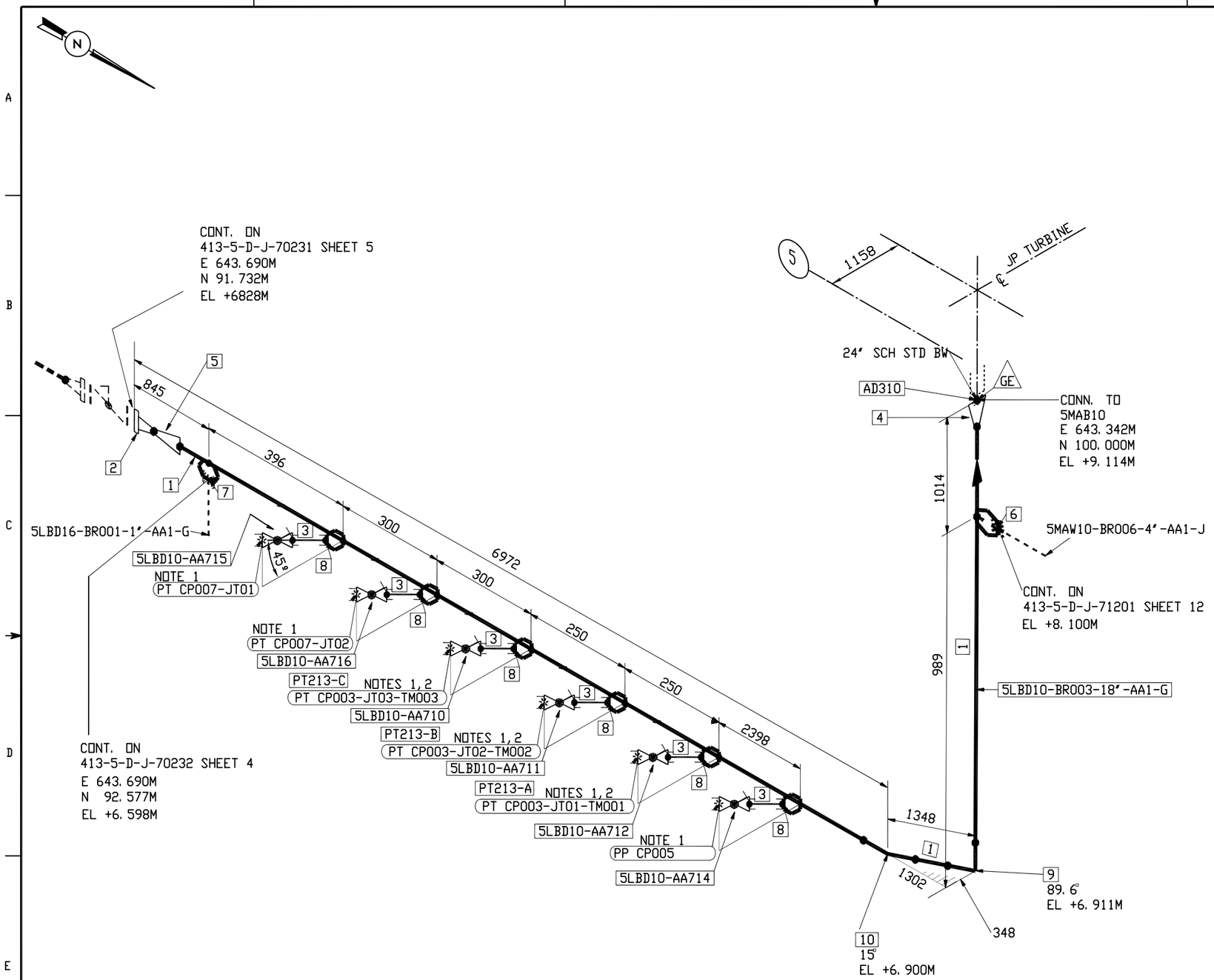

MATERIAL LIST

Nº	(Inch.)	DESCRIPTION / MATERIAL	QTY.
1	18	PIPE, S-STD, BE,.....ASTM-A106-GrBB	7.8 M
2	16	FLANGE WN, CL150, S-STD, FFFE/BE,.....ASTM-A105	1
3	3/4	PIPE, S-80 , PE,.....ASTM-A106-GrB	0.8 M
4	24X18	CONC. REDUCER, S-STD x S-STD, BE,.....ASTM-A234-WPB	1
5	18X16	CONC. REDUCER, S-STD x S-STD, BE,.....ASTM-A234-WPB	1
6	18X4	WELDOLET, S-STD x S-40, BE, ...ASTM-A105	1
7	18X1	SOCKOLET, CL3000, BE/SWE,.....ASTM-A105	1
8	18X3/4	SOCKOLET, CL3000, BE/SWE,.....ASTM-A105	6
9	18	LR 90 GR ELBOW, S-STD, BE,.....ASTM-A234-WPB	1
10	18	LR 45 GR ELBOW, S-STD, BE,.....ASTM-A234-WPB	1

REFERENCE DRAWINGS

Piping Composite	P&ID Nº.
413-5-D-M-60151 SH2	413-5-DT-M-10200 SH2

NOTES:

1.– 3" LONG PIECE OF PIPE PLUS THE LENGTH CORRESPONDING TO THE INSULATION THICKNESS

2.– SEE GE DRAWING 207D3034 SHEET 1/2 FOR INSTRUMENTATION INSTALLATION DETAILS.

LINES No. =

5LBD10-BR003-18"-AA1-G

REV.	DATE	PREP.	REVISED	APPRVD.	ISSUED FOR
2	17-05-06	NZAM	NZAM	NZAM	AS BUILT
1	26-10-04				CONSTRUCTION

PUBLIC POWER CORPORATION

LAVRION V CC PP

DMKT 11 21 302

METKA

LP AND LP BYPASS STEAM SYSTEM PIPING ISOMETRIC

EMPRESARIOS AGRUPADOS

METKA DWG.No. --

KKS DWG.No. 413-5-LB-JDI-EA-231

EA DWG.No. 413-5-D-J-70231

DIN A2

SCALE --

SHEET 15 CONT. -

Contains Information for the design of structures, systems and components..... YES ■ NO □

VERIFICATION: N/A □ HOU/SUP. ■ VERIFIER L1 □ L2 □

DOCUMENT PREPARED WITH CAD DO NOT MODIFY MANUALLY

PROPRIETARY INFORMATION
This document contains proprietary information of Empresarios Agrupados Internacional,S.A. and is to be used solely for the Project and the purpose for which it is furnished. It may not be disclosed to others for a different use without the written permission of Empresarios Agrupados Internacional,S.A.

413-5-D-J-70231-015-02

AA1
19 OCT 2004

0 100 200 mm

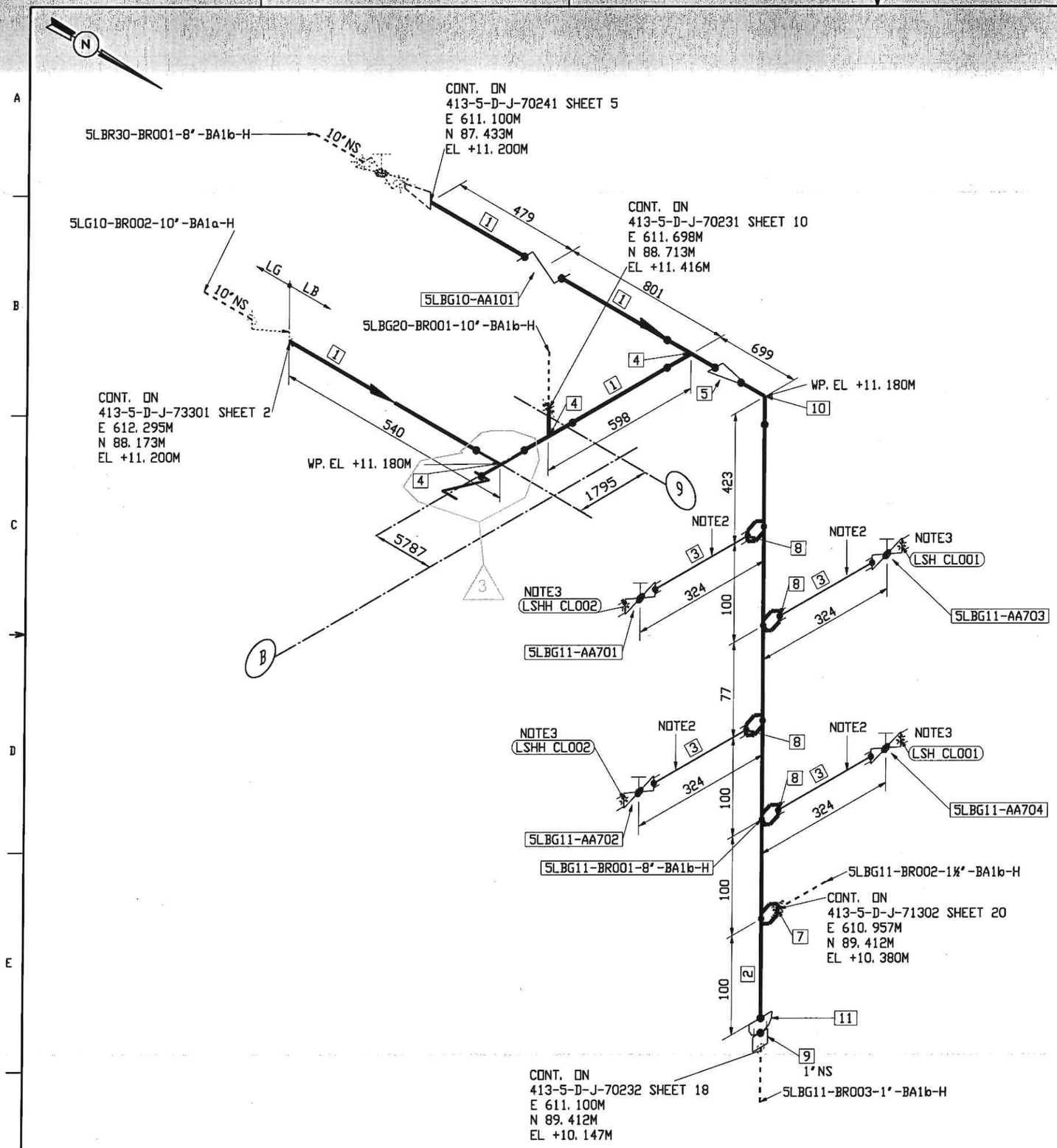

MATERIAL LIST

Nº	Size (Inch.)	DESCRIPTION / MATERIAL	QTY.
1	10	PIPE, S-60, BE,.....ASTM-A106-GrB	0.8 M
2	8	PIPE, S-60, BE,.....ASTM-A106-GrB	0.6 M
3	1	PIPE, S-80 , PE,.....ASTM-A106-GrB	0.6 M
4	10X10	TEE, S-60, BE,.....ASTM-A234-WPB	3
5	10X8	CONC. REDUCER, S-60 x S-60, BE,.....ASTM-A234-WPB	1
7	8X1.1/2	SOCKOLET, CL3000, BE/SWE,.....ASTM-A105	1
8	8X1	SOCKOLET, CL3000, BE/SWE,.....ASTM-A105	4
9	1	HALF COUPLING, CL3000, SWE,.....ASTM-A105	1
11	8	CAP, S-60, BE,.....ASTM-A234-WPB	1

REFERENCE DRAWINGS	
Piping Composite	P&ID Nº.
413-5-D-M-60152 SH2	413-5-DT-M-10200 SH2

NOTES:

1.– THE LENGTHS OF THE STRAIGHT PIPE SECTIONS HAVE BEEN OBTAINED TAKING INTO ACCOUNT THE DISTANCE BETWEEN VALVE FACES ACCORDING TO STANDARD ANSI B16.10 FINAL DIMENSION SHALL BE DEFINED BY THE FABRICATOR BASED ON VALVE SUPPLIER DRAWINGS.

2.– 3" LONG PIECE OF PIPE PLUS THE LENGTH CORRESPONDING TO THE INSULATION THICKNESS

3.– LSH & LSHH PIPES MUST BE INSTALLED COMPLETELY HORIZONTAL

LINES No. = 5LBG10-BR001-10"-BA1b-H
5LBG11-BR001-8"-BA1b-H

REV.	DATE	PREP.	REVISED	APPRVD.	ISSUED FOR
3	18-05-06	NZAM	NZAM	NZAM	AS BUILT
2	11-03-05	TAS	EMU	FBF	CONSTRUCTION
1	29-10-04	FGF /	EMU/GFF	FBF	CONSTRUCTION

PROPRIETARY INFORMATION
This document contains proprietary information of Empresarios Agrupados Internacional,S.A. and is to be used solely for the Project and the purpose for which it is furnished. It may not be disclosed to others for a different use without the written permission of Empresarios Agrupados Internacional,S.A.

Contains information for the design of structures, systems and components..... YES ■ NO □
VERIFICATION: N/A □ JUO/SUP. ■ VERIFIER N1 □ N2 □

DOCUMENT PREPARED WITH CAD DO NOT MODIFY MANUALLY

PUBLIC POWER CORPORATION
LAVRION V CC PP
DMKT 11 21 302

METKA

IP BYPASS STEAM SYSTEM
PIPING ISOMETRIC

EMPRESARIOS AGRUPADOS

METKA DWG.No.	–	DIN A2
KKS DWG.No.	413-5-LB-JDI-EA-241	SCALE —
EA DWG.No.	413-5-D-J-70241	SHEET 6 CONT. -

413-5-D-J-70241-006-03

BA1B

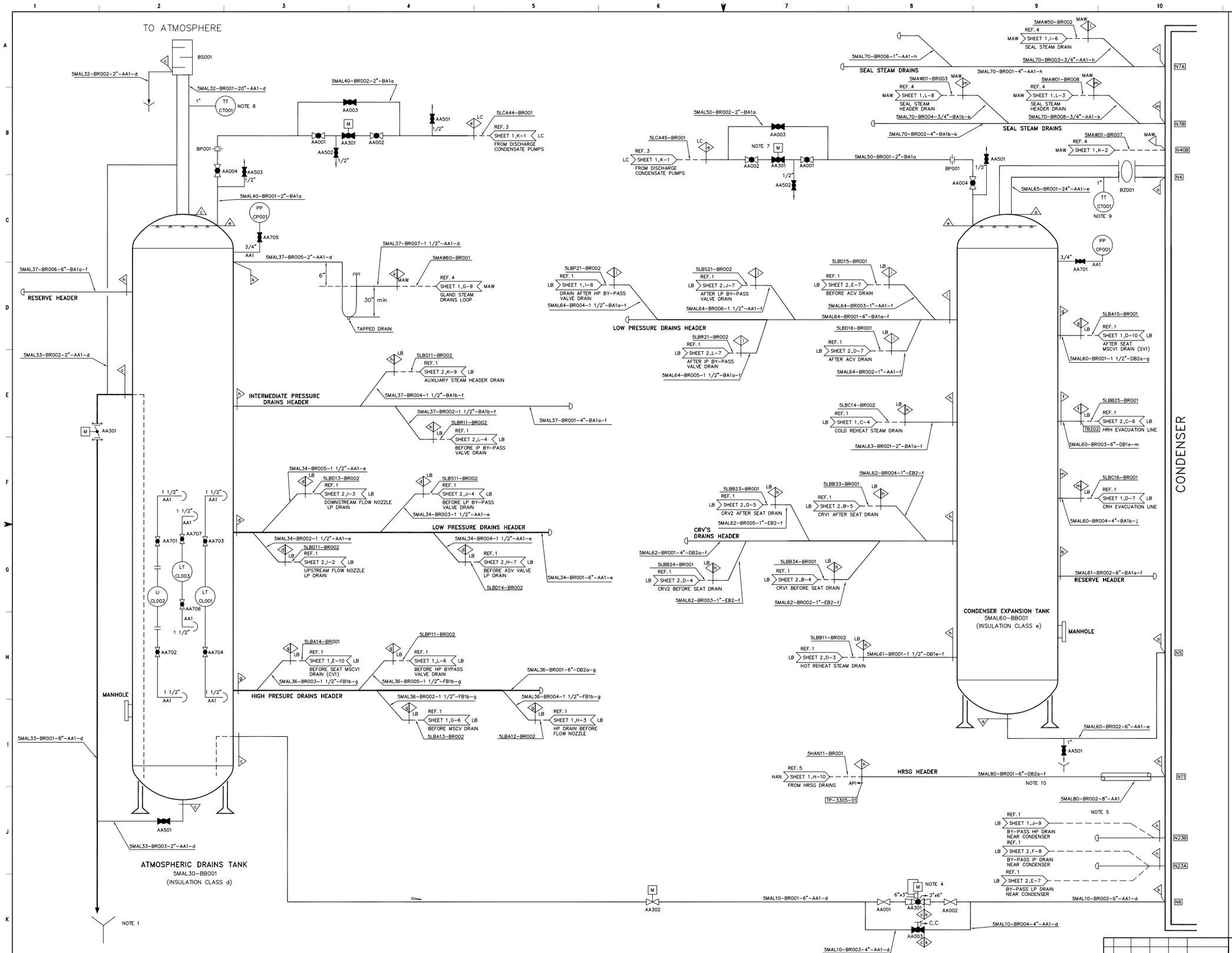

REFERENCE DRAWINGS

		CODE	DRAWING N°
1	P&ID STEAM & BY-PASS SYSTEM	LB	413-5-DT-M-10200
2	P&ID AUXILIARY STEAM SYSTEM	LG	413-5-DT-M-13300
3	P&ID CONDENSATE SYSTEM	LC	413-5-DT-M-10400
4	P&ID STEAM SEAL SYSTEM	MAW	413-5-DT-M-11200
5	P&ID HRSG – DRAINS AND VENTS SYSTEM	HAN	11680BTD03305

NOTES :

1.– THE OVERFLOW LINE AND ATMOSPHERIC TANK DRAIN SHALL BE LED TO THE CLEAN NETWORK PIT.

2.– THE GROUPING OF THE PIT CLEANING CONNECTIONS IN THE COLLECTION BOXES (SEE SHEET 2) MAY NOT COINCIDE WITH THE FINAL LAYOUT.

3.– SCOPE OF SUPPLY LIMITS: API (ALSTOM POWER ITALIA S.p.A)

4.– LOCATE THE CONTROL VALVE AS CLOSE AS POSSIBLE TO THE CONDENSER CONNECTION.

5.– BOILER DRAIN COLLECTION PIPE SLEEVE.

6.– N *** CONDENSER CONNECTIONS..

7.– LOCATE THE VALVE AS CLOSE AS POSSIBLE TO THE FLASH TANK.

8.– LOCATE THE TEMPERATURE TRANSMITTER AT 6 m FROM THE TANK OUTLET AT LEAST.

9.– LOCATE THE TEMPERATURE TRANSMITTER AS CLOSE AS POSSIBLE TO JOINT 5MAL65–BZ001.

10.– THE PIPE 5MAL80–BR001–6"–DB2a–f WILL HAVE THE MATERIAL IN ACCORDANCE WITH CLASS DB2a AND SCHEDULE 40.

INPUT DATA:

1.– P&ID MECHANICAL DWGS. SYMBOLS AND GENERAL NOTES, 413–5–DT–M–00300

2.– MECHANICAL PROJECT CRITERIA, 413–5–R–M–00400.

3.– PIPING DATA SHEETS, 413–5–R–M–00403

4.– SPECIFICATION FOR THERMAL INSULATION, 413–5–I–M–24900.

5.– STEAM TURBINE DRAIN SYSTEM CALCULATIONS REPORT, 413–5–F–M–11300

PRELIMINARY AND PENDING INFORMATION:

Branch	DESIGN P barg	DESIGN T °C
a	4/vacuum	160
b	28	230
c	3,5	150
d	7	170
e	30/vacuum	76
f	28	575
g	62	280
h	18	210
i	15	201
k	3,5/vacuum	150
l	6	350
m	30,5	413
n	4/vacuum	250

REV.	DATE	PREP.	REVISED	APPRVD.	ISSUED FOR
3	08-05-08	ESO	DGG/		AS-BUILT
2	15-10-04	ESO/	DGG	VAJ	CONTRUCTION
1	29-03-04	ESO/	DGG	VAJ	DESIGN

PROPRIETARY INFORMATION
This document contains proprietary information of Empresarios Agrupados Internacional,S.A. and is to be used solely for the Project and the purpose for which it is furnished. It may not be disclosed to others for a different use without the written permission of Empresarios Agrupados Internacional,S.A.

Contains information for the design of structures, systems and components..... YES ■ NO □

VERIFICATION: NA □ HOUSUAL ■ VERIFIER L1 □ L2 □

DOCUMENT PREPARED WITH CAD DO NOT MODIFY MANUALLY

PUBLIC POWER CORPORATION

LAVRION V CC PP
DMKT 11 21 302

METKA

EMPRESARIOS AGRUPADOS

P&ID
STEAM TURBINE DRAINS AND VENTS SYSTEM

METKA DWG.No.	–	DIN A0	
KKS DWG.No.	413-5-MAL-MDD-EA-300	SCALE	--
EA DWG.No.	413-5-DT-M-11300	SHEET 1 OF 2	

413-5-DT-M-11300-001-03

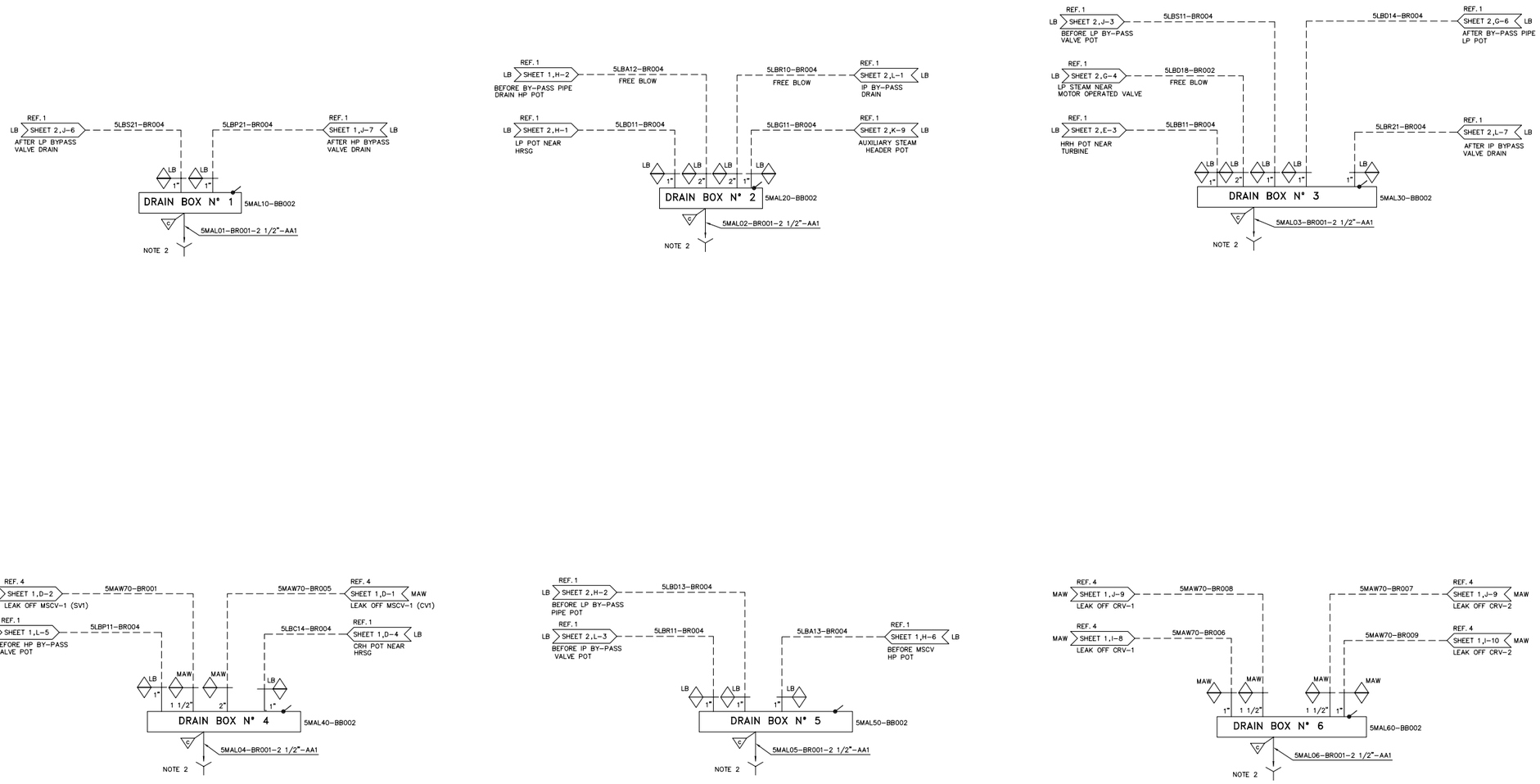

NOTES :

1.- REFERENCE DRAWINGS NOTES, INPUT DATA AND DESIGN CONDITIONS ARE SHOWN IN SHEET 1.

REV.	DATE	PREP.	REVISED	APPRVD.	ISSUED FOR
3	08-05-08	ESO	DGG/		AS-BUILT
2	15-10-04	ESO/	DGG	VAJ	CONSTRUCTION
1	29-03-04	ESO/	DGG	VAJ	DESIGN

PROPRIETARY INFORMATION
This document contains proprietary information of Empresarios Agrupados Internacional S.A. and is to be used solely for the Project and the purpose for which it is furnished. It may not be disclosed to others for a different use without the written permission of Empresarios Agrupados Internacional S.A.

Contains information for the design of structures, systems and components..... YES ■ NO □

VERIFICATION: N/A □ HOUSUR ■ VERIFIER L1 □ L2 □

DOCUMENT PREPARED WITH CAD DO NOT MODIFY MANUALLY

PUBLIC POWER CORPORATION

LAVRION V CC PP
DMKT 11 21 302

METKA

EMPRESARIOS AGRUPADOS

P&ID
STEAM TURBINE DRAINS AND VENTS SYSTEM

METKA DWG.No.	–	DIN A0
KKS DWG.No.	413-5-MAL-MDD-EA-300	SCALE --
EA DWG.No.	413-5-DT-M-11300	SHEET 2 OF 2

413-5-DT-M-11300-002-03

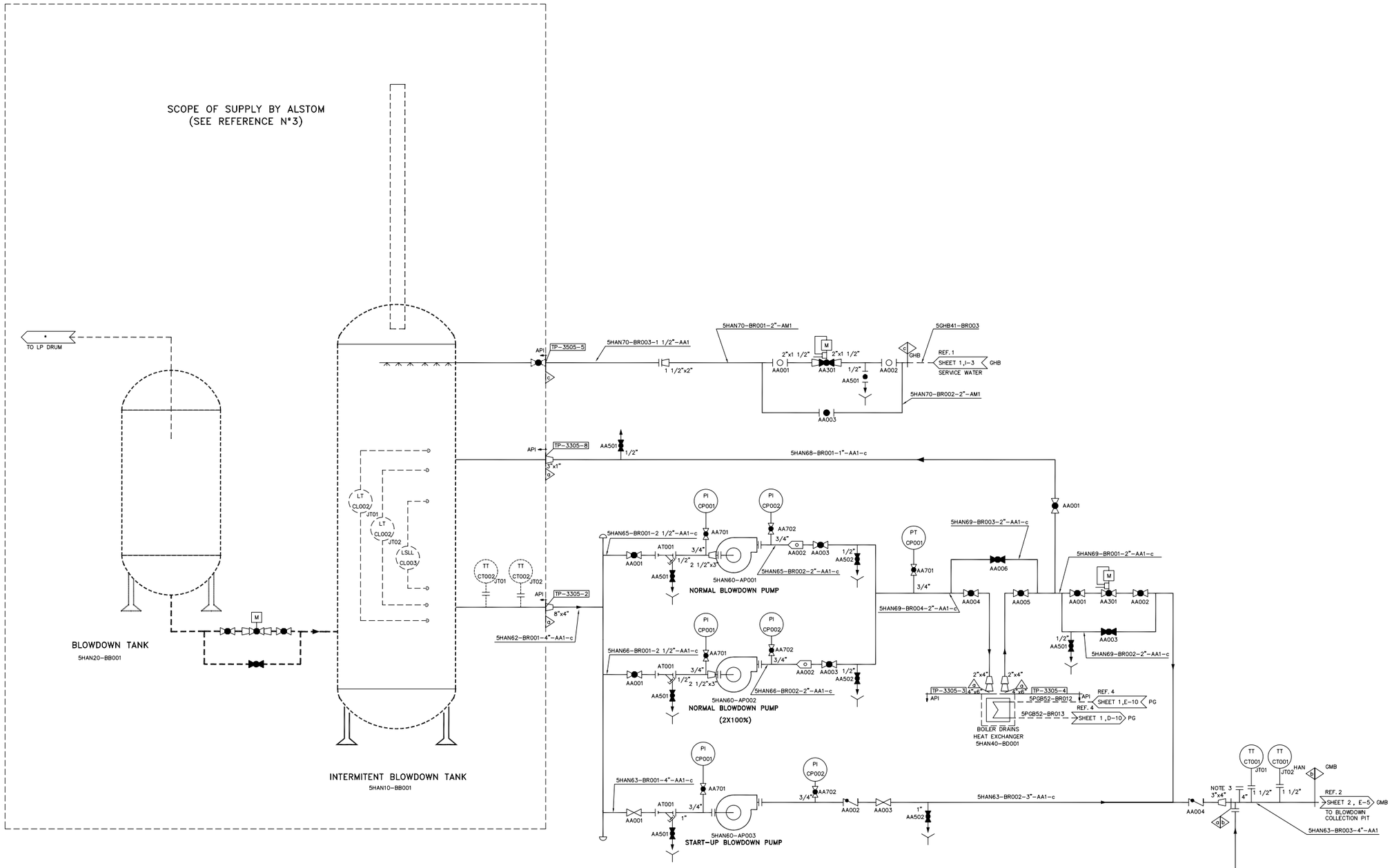

REFERENCE DRAWINGS

		CODE	DRAWING N°
1.–	P&ID SERVICE AND POTABLE WATER DISTRIBUTION SYSTEM	GHB	413-5-DT-M-14100
2.–	P&ID PLANT & PROCESS DRAINS SYSTEM	GMB	413-5-DT-M-14500
3.–	P&ID HRSG-DRAINS AND VENTS SYSTEM	HAN	11680BTD03305
4.–	P&ID COOLING WATER SYSTEM	PG	413-5-DT-M-12200

NOTES :

1.– ALL LINES SHALL HAVE AN ISOLATION TO PROTECT THE PERSONNEL, WHICH COULD BE ELIMINATED IN AREAS WITHOUT RISK.
2.– ALL HIGH POINTS SHALL CARRY A VENT, AND ALL LOW POINTS A DRAIN.
3.– BLIND FLANGE FOR DRAIN CLEANING.
4.– SCOPE OF SUPPLY LIMITS: API (ALSTOM POWER ITALIA S.p.A.)

INPUT DATA

1.– P&ID MECHANICAL DRAWINGS SYMBOLOGY AND GENERAL NOTES 413-5-DT-M-00300
2.– MECHANICAL PROJECT CRITERIA, 413-5-R-M-00400
3.– PIPING DATA SHEET 413-5-R-M-00403
4.– SPECIFICATION FOR THERMAL INSULATION 413-5-I-M-24900
5.– HRSG DRAINS AND VENTS SYSTEM CALCULATIONS REPORT 413-5-F-M-11100

PRELIMINARY AND PENDING INFORMATION:

Branch	DESIGN P b-arg	DESIGN T °C
a	4	150
b	4	60
c	8	60

REV.	DATE	PREP.	REVISED	APPRVD.	ISSUED FOR
3	08-05-06	ESO	DGG/		AS-BUILT
2	01-10-04	ESO/	DGG	VAJ	CONSTRUCTION
1	22-04-04	ESO/	DGG	VAJ	DESIGN

PROPRIETARY INFORMATION
This document contains proprietary information of Empresarios Agrupados Internacional S.A. and is to be used solely for the Project and the purpose for which it is furnished. It may not be disclosed to others for a different use without the written permission of Empresarios Agrupados Internacional S.A.

Contains information for the design of structures, systems and components..... YES ■ NO □
VERIFICATION: N/A □ HOUSUP. ■ VERIFIER L1 □ L2 □
DOCUMENT PREPARED WITH CAD DO NOT MODIFY MANUALLY

PUBLIC POWER CORPORATION
LAVRION V CC PP
DMKT 11 21 302

METKA

P&ID
HRSG DRAINS AND
VENTS SYSTEM

EMPRESARIOS AGRUPADOS

METKA DWG.No.	–	DIN A0
KKS DWG.No.	413-5-HAN-MDD-EA-100	SCALE --
EA DWG.No.	413-5-DT-M-11100	SHEET 1 OF 1

413-5-DT-M-11100-001-03

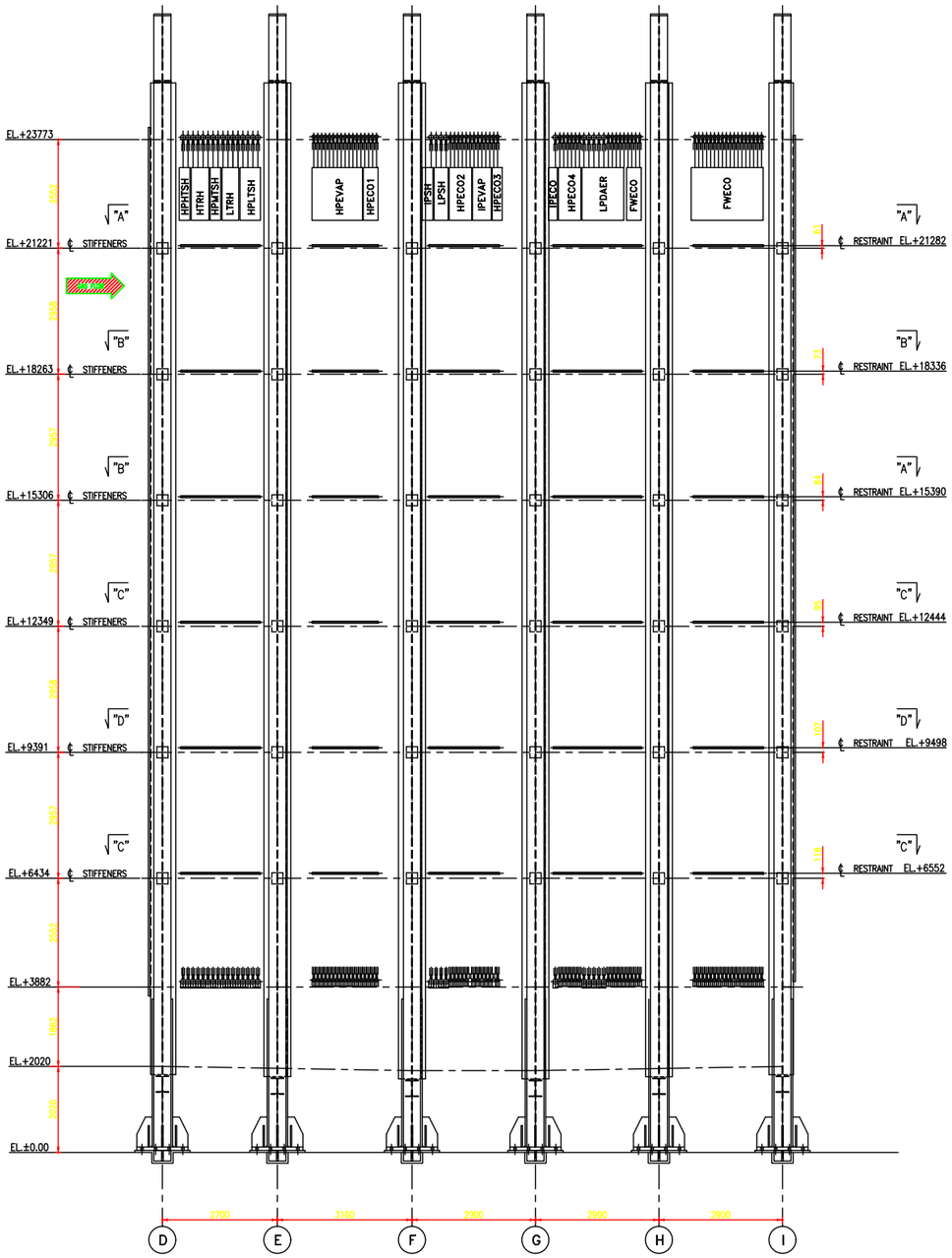

RIGHT SIDE ELEVATION

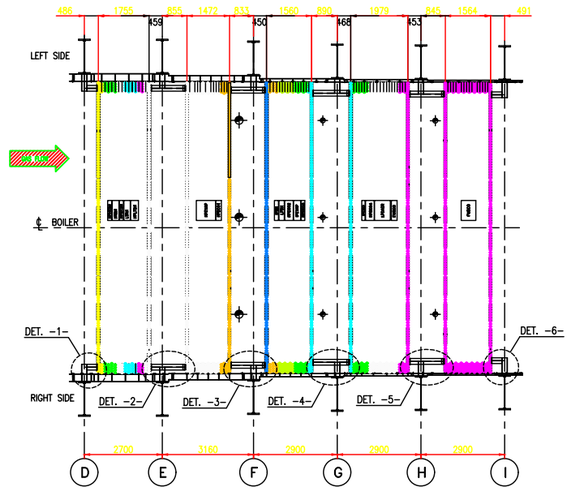

SECTION "A-A" – EL. +21221 / EL. +15306
(SCALE 1:33.3)

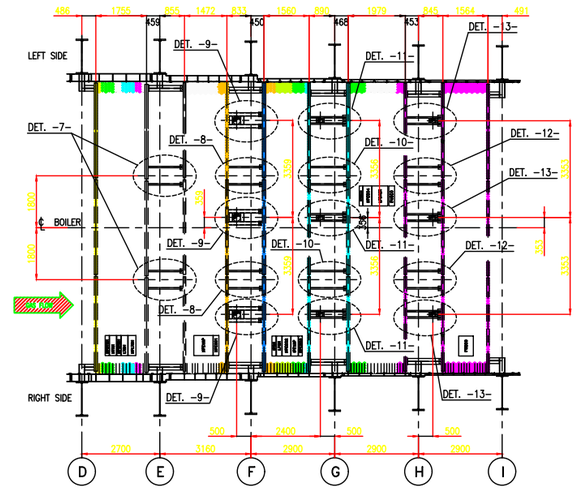

SECTION "B-B" – EL. +18336
(SCALE 1:33.3)

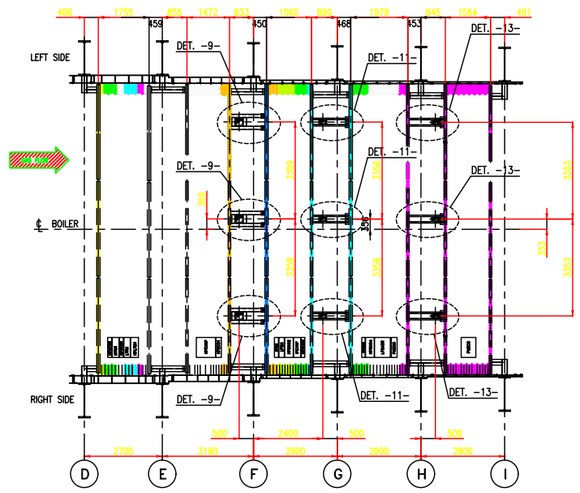

SECTION "C-C" – EL. +12444 / EL. +6552
(SCALE 1:33.3)

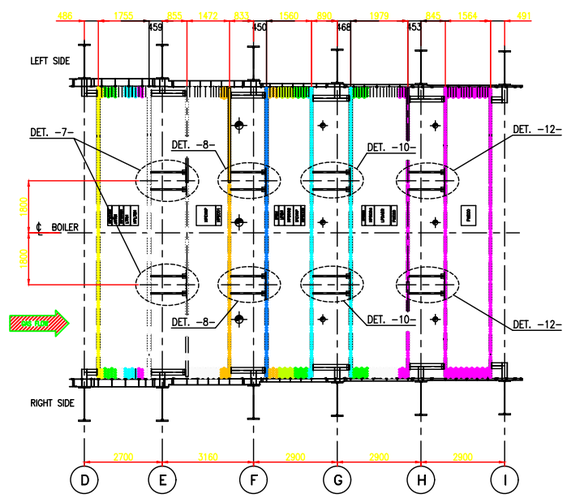

SECTION "D-D" – EL. +9498
(SCALE 1:33.3)

ERECTION DWG. No.	PART MARK	DESCRIPTION	MAIN SHAPE	PCS	1 PC WEIGHT	TOTAL WEIGHT
11680MDD06235 & 06236	B/1	COMPOSED BEAM	TYPE"1"	12	39,8	477,5
11680MDD06235 & 06236	B/2	COMPOSED BEAM	TYPE"1"	12	67,5	809,5
11680MDD06235 & 06236	B/3	BEAM	HEA 180	12	60,5	726
11680MDD06235 & 06236	B/4	BEAM	HEA 180	12	63,1	757,8
11680MDD06235 & 06236	B/5	BEAM	HEA 180	12	61	732
11680MDD06235 & 06236	B/6	BEAM	HEA 180	12	38,8	466,3
11680MDD06235 & 06236	L7/1	ANGLE	100 x 50 x 8	8	10,5	83,5
11680MDD06235 & 06236	L8/1	ANGLE	100 x 50 x 8	8	10,4	83
11680MDD06235 & 06236	L9/1	BEAM	UPN 120	18	15,5	279
11680MDD06235 & 06236	L9/2	BEAM	UPN 120	18	3,65	65,5
11680MDD06235 & 06236	L10/1	ANGLE	100 x 50 x 8	8	11	88
11680MDD06235 & 06236	L11/1	ANGLE	100 x 50 x 8	18	11	199
11680MDD06235 & 06236	L11/2	ANGLE	100 x 50 x 8	18	2,6	47,5
11680MDD06235 & 06236	L12/1	ANGLE	100 x 50 x 8	8	10,5	84
11680MDD06235 & 06236	L13/1	ANGLE	100 x 50 x 8	18	10,5	189
11680MDD06235 & 06236	L13/2	ANGLE	100 x 50 x 8	18	2,6	47,5
11680MDD06235 & 06236	PLA/1	BEND PLATE	PL. 8	12	3,7	44,4
11680MDD06235 & 06236	PLB/1	BEND PLATE	PL. 8	36	3,7	133,2
11680MDD06235 & 06236	PLC/1	PLATE	PL.12	8	1,8	14,4
11680MDD06235 & 06236	PLC/2	PLATE	PL.12	60	1,8	108
11680MDD06235 & 06236	PLD/1	PLATE	PL.12	18	1,8	32,4
11680MDD06235 & 06236	BL/1	BOLT M 20 x 50	–	8	0,25	2
11680MDD06235 & 06236	BL/2	BOLT M 20 x 50	–	78	0,25	19,5
			TOTAL WEIGHT Kg.			5490

MARKING INSTRUCTIONS FOR SHOP DRAWINGS AND ERECTION:

- EACH COMPONENT WILL BE MARKED AS INDICATED:
- EXAMPLE : 1 TMARK
  DENOTES UNIT NUMBER — DENOTES ERECTION MARK
- ○ MEANS BILL OF MATERIAL POSITION. -SHOP
- ▭ MEANS MARK'S NUMBER. -ERECTION

WELDINGS:

- ALL WELDS TO BE CONTINUOUS FILLET WELDS UNLESS OTHERWISE SPECIFIED.
- NOT DIMENSIONED FILLET WELDS SHALL HAVE A DIMENSION "a" EQUAL TO 0,7 TIMES. THE MINIMUM THICKNESS TO BE WELDED. (a = 0,7 t)
- ⚑ MEANS FIELD WELDING.

MATERIALS:

(MODULES 1-2):

- PLATES — ASTM A240 TP409
- BOLTS M20 UNI 5727 — ASTM A193 B8 M (OR EQUIV.)
  (N.1 WASHER EACH BOLT)

(MODULES 3-4-5):

- PLATES & ANGLES — S275JR EN 10025
- BOLTS M20 UNI 5727 — CL. 8.8 – EN20898
  (N.1 WASHER EACH BOLT)

NOTES:

- ALL DIMENSIONS ARE MILLIMETERS UNLESS DIFFERENTLY SHOWN.
- ALL ELEVATIONS REFER TO QUOTE +0,00 FINISHED GROUND FLOOR.
- ARRANGEMENT SHOWN IS FOR (1) ONE UNIT, (1) ONE UNIT ON THIS CONTRACT.
- FOR ALL OTHER MANUFACTURING, TESTING AND PAINTING INSTRUCTIONS REFER TO M.R. 11680MDR06200.

ERECTION/LIFTING PROCEDURE:

1) THE FABRICATOR/ERECTOR IS RESPONSABLE FOR DESIGN & SUPPLY OF ANY EXTRA LIFTING ATTACHMENTS REQUIRED, INCLUDING TRUNNIONS, BRACING AND LUGS ETC. DETAILS OF LIFTING ATTACHMENTS TO BE SUBMITTED TO A.P.I. FOR APPROVAL. NOTE THAT ANY INTERNAL TRUNNIONS OR BRACING MUST BE REMOVED AFTER ERECTION.

2) THE ERECTOR IS TO ENSURE BOILER OUTLET FLANGE IS ATTACHED TO STACK INLET FLANGE PRIOR TO LIFTING STACK INTO POSITION.

REFERENCE DRAWINGS:

- FOR PRESSURE PARTS ASSEMBLY SEE DWG. N° 11680MDD03030/3035
- FOR HARPS TUBE TO HEADER BAFFLES SEE DWG. N° 11680-1ED162
- FOR MODULE INSULATED PANELS – ASSEMBLY EXTERNAL LEFT & RIGHT SIDE SEE DWG. N° 11680MDD06250
- FOR SEIS. TIES & GUIDES FOR HARPS – DETAILS SEE DWG. N° 11680MDD06236
- FOR SEIS. TIES & GUIDES FOR HARPS MATERIAL FORECAST SEE DOC. N° 11680MDF06235
- FOR SEIS. TIES & GUIDES FOR HARPS MATERIAL REQUISITION SEE DOC. N° 11680MDR06240

Rev. 0 and above are RELEASED for ERECTION

KKS DWG. No. 5-HA-000-API-335

REV.	DATA Date	DESCRIZIONE/Description	DIS. Dsg.	CONTR. Checked	VISTO Approv.
2	18-10-05	REVISED FOR LABELLING "AS BUILT" ONLY, NO OTHER CHANGES	A.S.	A.R.	A.N.
1	15-01-05	ADDED ERECTION PART MARK LIST	A.S.	A.R.	A.N.

CAVEO CONTENTI DI PROPRIETA' ESCLUSIVA ALSTOM POWER S.p.A. Tutti i diritti riservati. Questo documento non può essere riprodotto o trasmesso a terzi senza autorizzazione scritta. This Drawing is the Property of Alstom Power S.p.A. All rights reserved. No reproduction or use, as a whole or in part, without written consent.

LAVRION – METKA
H.R.S.G.
SEIS. TIES & GUIDES FOR HARPS ASSEMBLY

ALSTOM
ALSTOM POWER ITALIA S.p.A.

SCALE Scale 1:50

FIRME/Signature	DATA/Date
DIS./Dsg. L.L.	15/10/04
CONTR./Check. A.R.	26/10/04
VISTO/Approv. A.N.	26/10/04

RIFERIMENTO N. Reference N.

N°. DISEGNO/Drawing No. 11680MDD06235

TAV./Sh. 1 DI/OF /

REV. 1 2

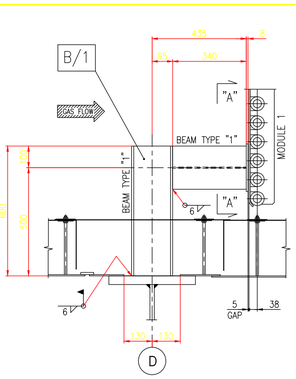

DETAIL –1–
Mat. ASTM A240 TP304

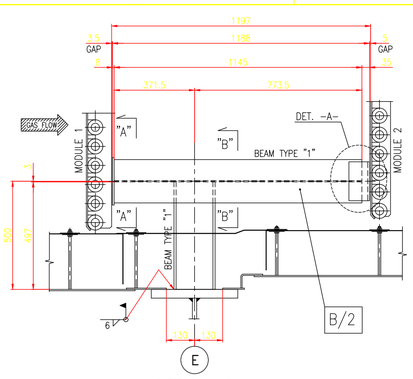

DETAIL –2–
Mat. ASTM A240 TP304
AS DRAWING FOR RIGHT SIDE
OPPOSITE HAND FOR LEFT SIDE

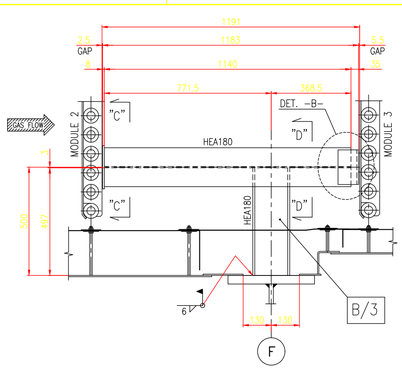

DETAIL –3–
Mat. S275JR EN10025
AS DRAWING FOR RIGHT SIDE
OPPOSITE HAND FOR LEFT SIDE

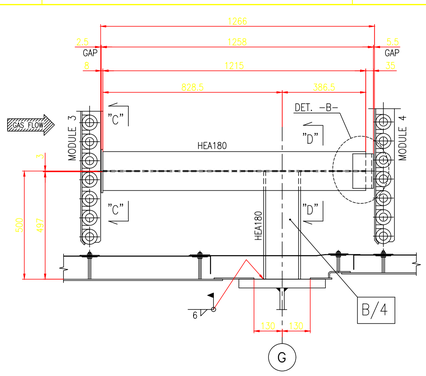

DETAIL –4–
Mat. S275JR EN10025
AS DRAWING FOR RIGHT SIDE
OPPOSITE HAND FOR LEFT SIDE

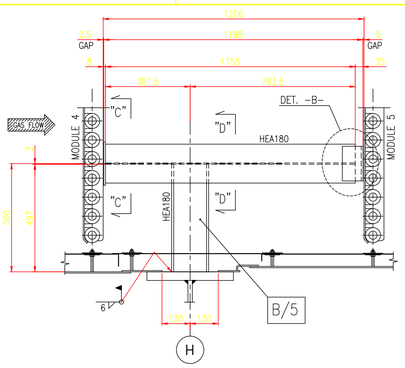

DETAIL –5–
Mat. S275JR EN10025
AS DRAWING FOR RIGHT SIDE
OPPOSITE HAND FOR LEFT SIDE

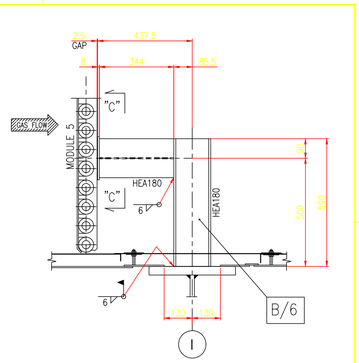

DETAIL –6–
Mat. S275JR EN10025

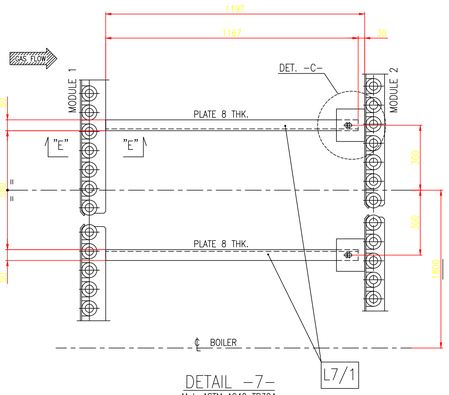

DETAIL –7–
Mat. ASTM A240 TP304

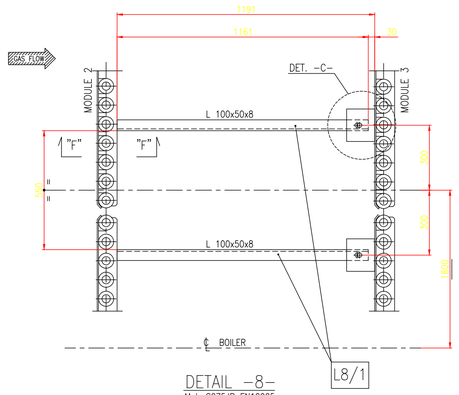

DETAIL –8–
Mat. S275JR EN10025

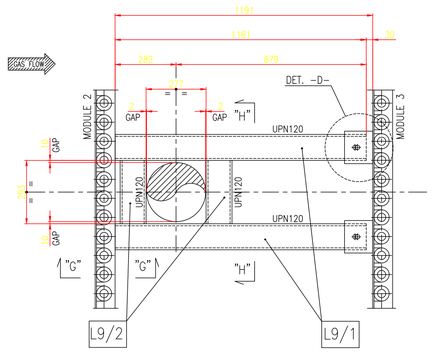

DETAIL –9–
Mat. S275JR EN10025

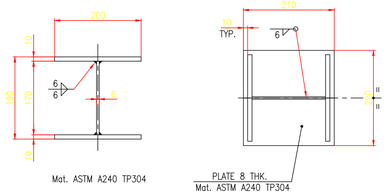

BEAM TYPE "1"
(SCALE 1:5)

SECTION "A–A"
(SCALE 1:5)

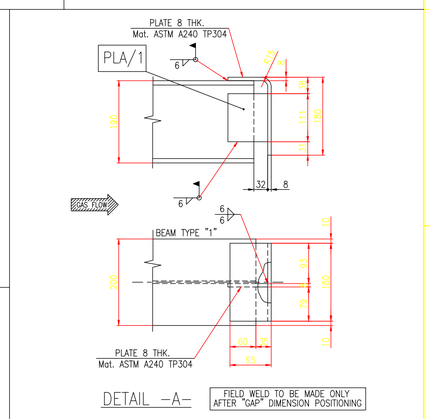

DETAIL –A–
FIELD WELD TO BE MADE ONLY AFTER "GAP" DIMENSION POSITIONING

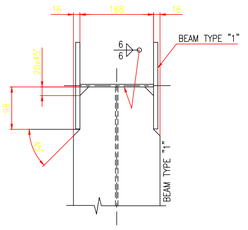

SECTION "B–B"
(SCALE 1:5)

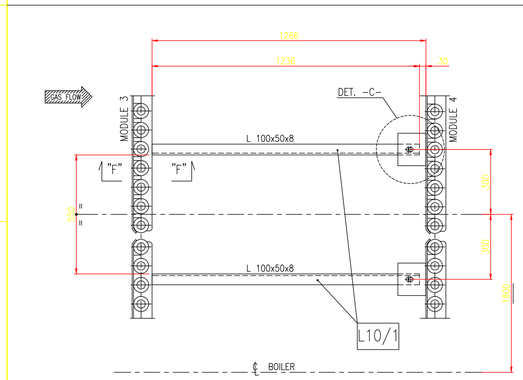

DETAIL –10–
Mat. S275JR EN10025

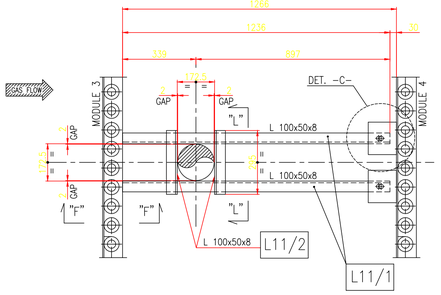

DETAIL –11–
Mat. S275JR EN10025

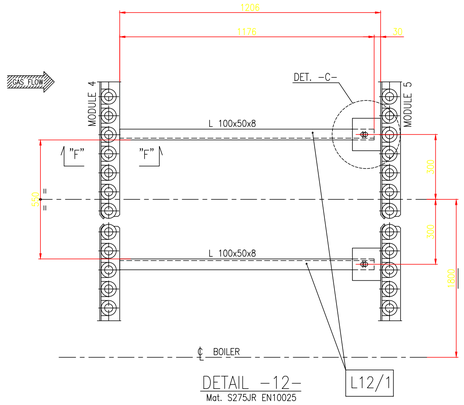

DETAIL –12–
Mat. S275JR EN10025

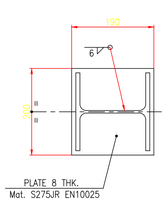

SECTION "C–C"
(SCALE 1:5)

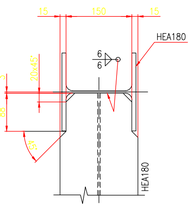

SECTION "D–D"
(SCALE 1:5)

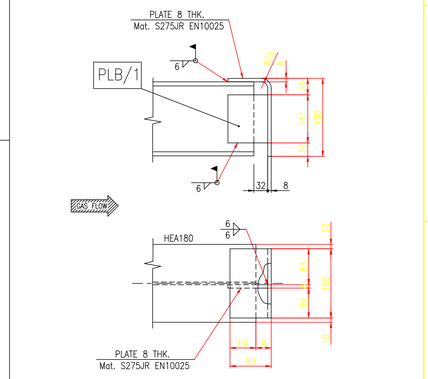

DETAIL –B–
FIELD WELD TO BE MADE ONLY AFTER "GAP" DIMENSION POSITIONING

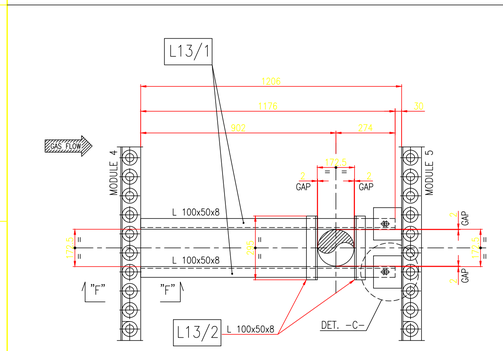

DETAIL –13–
Mat. S275JR EN10025

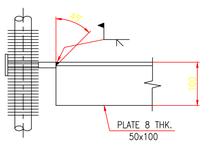

Mat. ASTM A240 TP304
SECTION "E–E"
(SCALE 1:5)

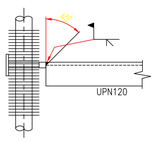

Mat. S275JR EN10025
SECTION "G–G"
(SCALE 1:5)

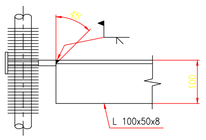

Mat. S275JR EN10025
SECTION "F–F"
(SCALE 1:5)

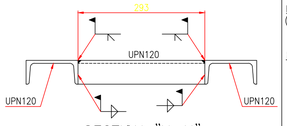

SECTION "H–H"
(SCALE 1:5)

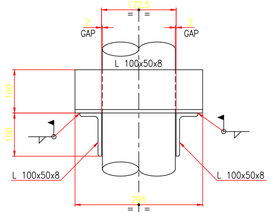

SECTION "L–L"
(SCALE 1:5)

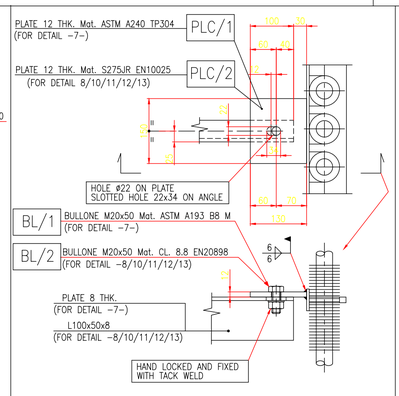

DETAIL –C–
(SCALE 1:5)

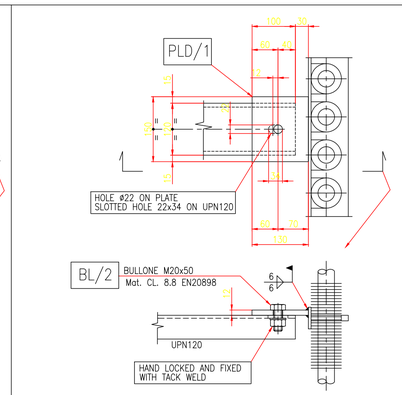

DETAIL –D–
(SCALE 1:5)

NOTES:

– FOR SEIS. TIES & GUIDES FOR HARPS – ASSEMBLY SEE DWG. N° 11680MDD06235

Rev. 0 and above are RELEASED for ERECTION

KKS DWG. No. 5–HA–000–API–336

REV.	DATA Date	DESCRIZIONE/Description	DIS. Dwg.	CONTR. Checked	VISTO Approv.
2	18–10–05	REVISED FOR LABELLING "AS BUILT" ONLY. NO OTHER CHANGES	A.S.	A.R.	A.N.
1	15–01–05	ADDED ERECTION PART MARKS	A.S.	A.R.	A.N.

QUESTO DISEGNO E' PROPRIETA' DELLA Alstom Power Italia SpA
A TERMINI DI LEGGE NE E' VIETATA LA RIPRODUZIONE E LA COMUNICAZIONE A TERZI
This Drawing is the Property of Alstom Power Italia SpA
The reproduction for any use to a third party is forbidden by law.

SCALA Scale	FIRME/Signature	DATA/Date
1:10	DIS./Dwg. L.L.	15/10/04
	CONTR./Check. A.R.	26/10/04
	VISTO/Approv. A.N.	26/10/04

LAVRION – METKA
H.R.S.G.
SEIS. TIES & GUIDES FOR HARPS
DETAILS

RIFERIMENTO N.
Reference N.

N°. DISEGNO/Drawing No. 11680MDD06236

TAV./Sh. 1 FOG./Sr. 1

REV. 1 2

ALSTOM
ALSTOM POWER ITALIA S.p.A.

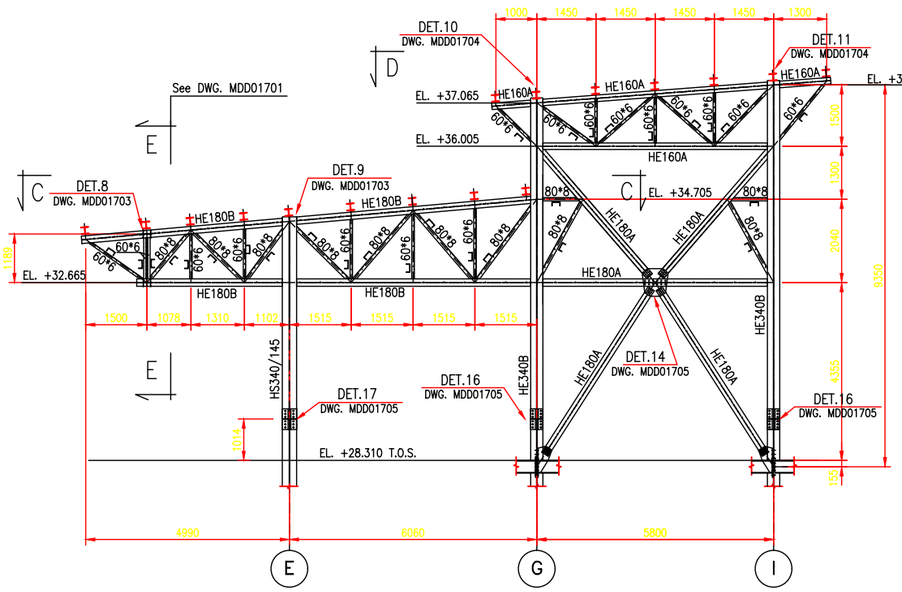

SECTION A–A

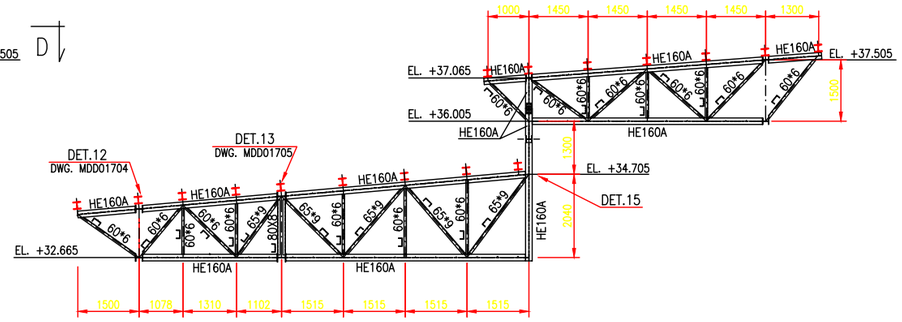

SECTION B–B

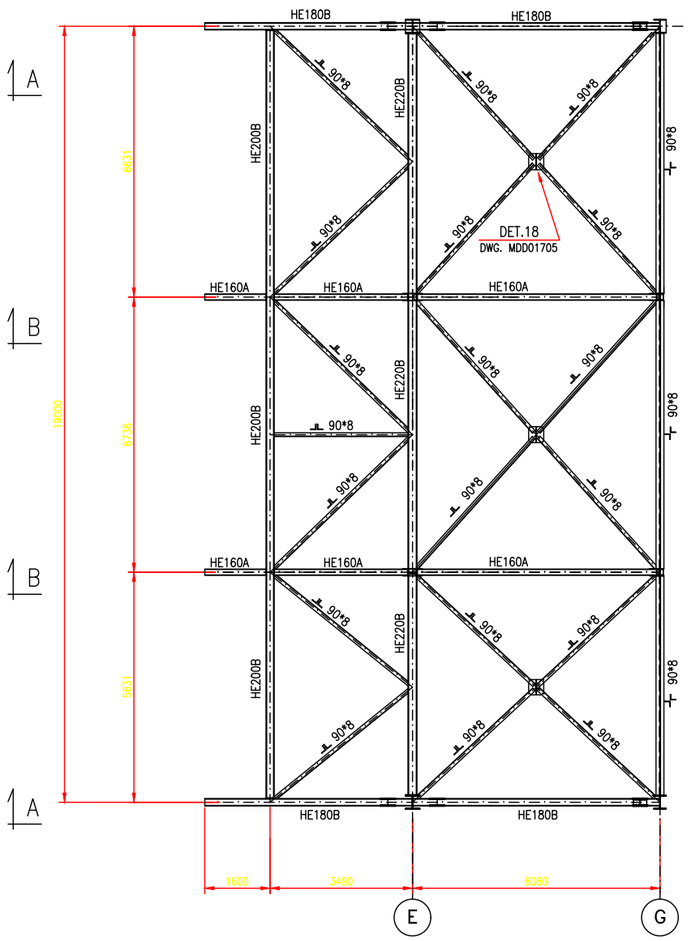

ROOF PLAN – VIEW C–C

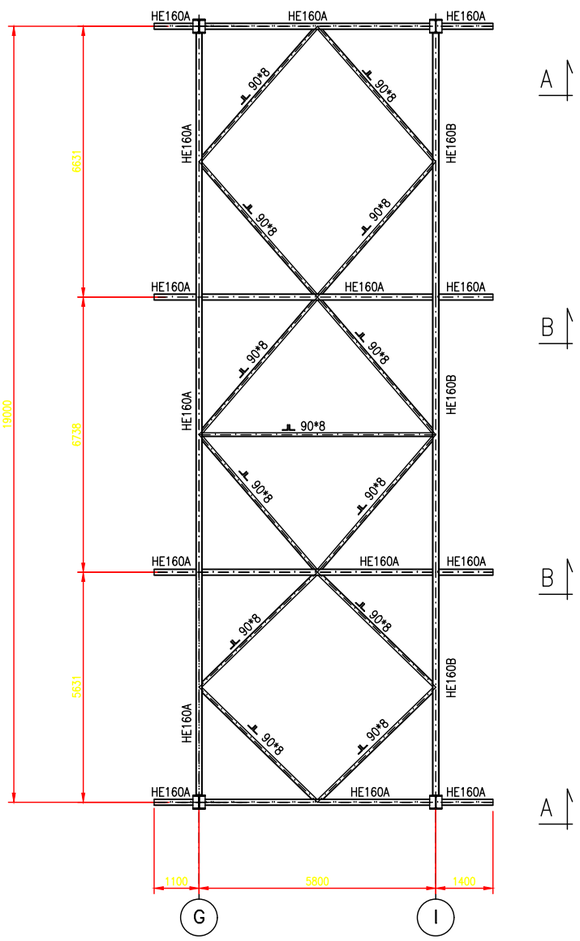

ROOF PLAN – VIEW D–D

MARKING INSTRUCTIONS FOR SHOP DRAWINGS AND ERECTION:

- EACH COMPONENT WILL BE MARKED AS INDICATED:
- EXAMPLE : 11 MARK
  DENOTES UNIT NUMBER — DENOTES ERECTION MARK
- ○ MEANS BILL OF MATERIAL POSITION. –SHOP
- ▭ MEANS MARK'S NUMBER. –ERECTION

WELDINGS:

- NOT DIMENSIONED FILLET WELDS SHALL HAVE A DIMENSION "a" EQUAL TO 0,7 TIMES. THE MINIMUM THICKNESS TO BE WELDED. (a = 0,7 t)
- ⚑ MEANS FIELD WELDING.

MATERIALS:

- BEAMS & PLATE (ROLLED SECTION) S275JR EN 10025
- BEAMS & PLATE (BUILT UP SECTION) S355JR EN 10025
- BOLTS Cl. 8.8 – EN20898 – UNI 5737 (GALVANIZED)
- NUTS Cl. 8 – EN20898 – UNI 5588
- WASHER Cl. R80 – EN20898 – UNI 6592 (N°2xBolt)

NOTES:

- ALL DIMENSIONS ARE MILLIMETERS UNLESS DIFFERENTLY SHOWN.
- ALL ELEVATIONS REFER TO QUOTE +0,00 FINISHED GROUND FLOOR.
- ARRANGEMENT SHOWN IS FOR (1) ONE UNIT, (1) ONE UNIT ON THIS CONTRACT.
- FOR ALL OTHER MANUFACTURING, TESTING AND PAINTING INSTRUCTIONS REFER TO M.R. 11680MDR06200.

ERECTION/LIFTING PROCEDURE:

1) THE FABRICATOR/ERECTOR IS RESPONSABLE FOR DESIGN & SUPPLY OF ANY EXTRA LIFTING ATTACHMENTS REQUIRED, INCLUDING TRUNNIONS, BRACING AND LUGS ETC. DETAILS OF LIFTING ATTACHMENTS TO BE SUBMITTED TO A.P.I. FOR APPROVAL. NOTE THAT ANY INTERNAL TRUNNIONS OR BRACING MUST BE REMOVED AFTER ERECTION.

2) THE ERECTOR IS TO ENSURE BOILER OUTLET FLANGE IS ATTACHED TO STACK INLET FLANGE PRIOR TO LIFTING STACK INTO POSITION.

REFERENCE DRAWINGS:

- ASSEMBLY PLANS AND SECTION SEE DWG. N°11680MDD01700
- SECTION E–E AND SECTION ROW "E" – "G" – "I" SEE DWG. N°11680MDD01701
- ROOF PURLINS PLAN SEE DWG. N°11680MDD01702
- DETAILS FROM "1" TO "9" SEE DWG. N°11680MDD01703
- DETAILS FROM "10" TO "12" SEE DWG. N°11680MDD01704
- DETAILS FROM "13" TO "18" SEE DWG. N°11680MDD01705
- FOR MATERIAL FORECAST CANOPY STRUCTURE SEE DOC. N°11680MDF01700

Rev. 0 and above are RELEASED for ERECTION

KKS DWG. No. 5–HA–000–API–318

REV.	DATA Date	DESCRIZIONE/Description	DIS. Dwg.	CONTR. Checked	VISTO Approv.
1	18–10–05	REVISED FOR LABELLING 'AS BUILT' ONLY. NO OTHER CHANGES	A.S.	A.R.	A.N.

QUESTO DISEGNO È PROPRIETÀ DELLA ALSTOM Power Italia S.p.A. A TERMINE DI LEGGE NE È VIETATA LA RIPRODUZIONE E LA COMUNICAZIONE A TERZI
This Drawing is the Property of ALSTOM Power Italia S.p.A. The reproduction for any use by a third party is forbidden by law.

H.R.S.G.
CANOPY STRUCTURE
ASSEMBLY PLANS AND SECTIONS

ALSTOM
ALSTOM Power Italia S.p.A.

SCALA Scale	FIRME/Signature		DATA/Date
1:75	DIS./Drg.	CDC	23–07–04
	CONTR./Check.	A.R.	30–07–04
	VISTO/Approv.	A.N.	30–07–04

RIFERIMENTO N. Reference N.

N°. DISEGNO/Drawing No. 11680MDD01700 — TAV./Sh. 1 / DI/of 1

REV. 1

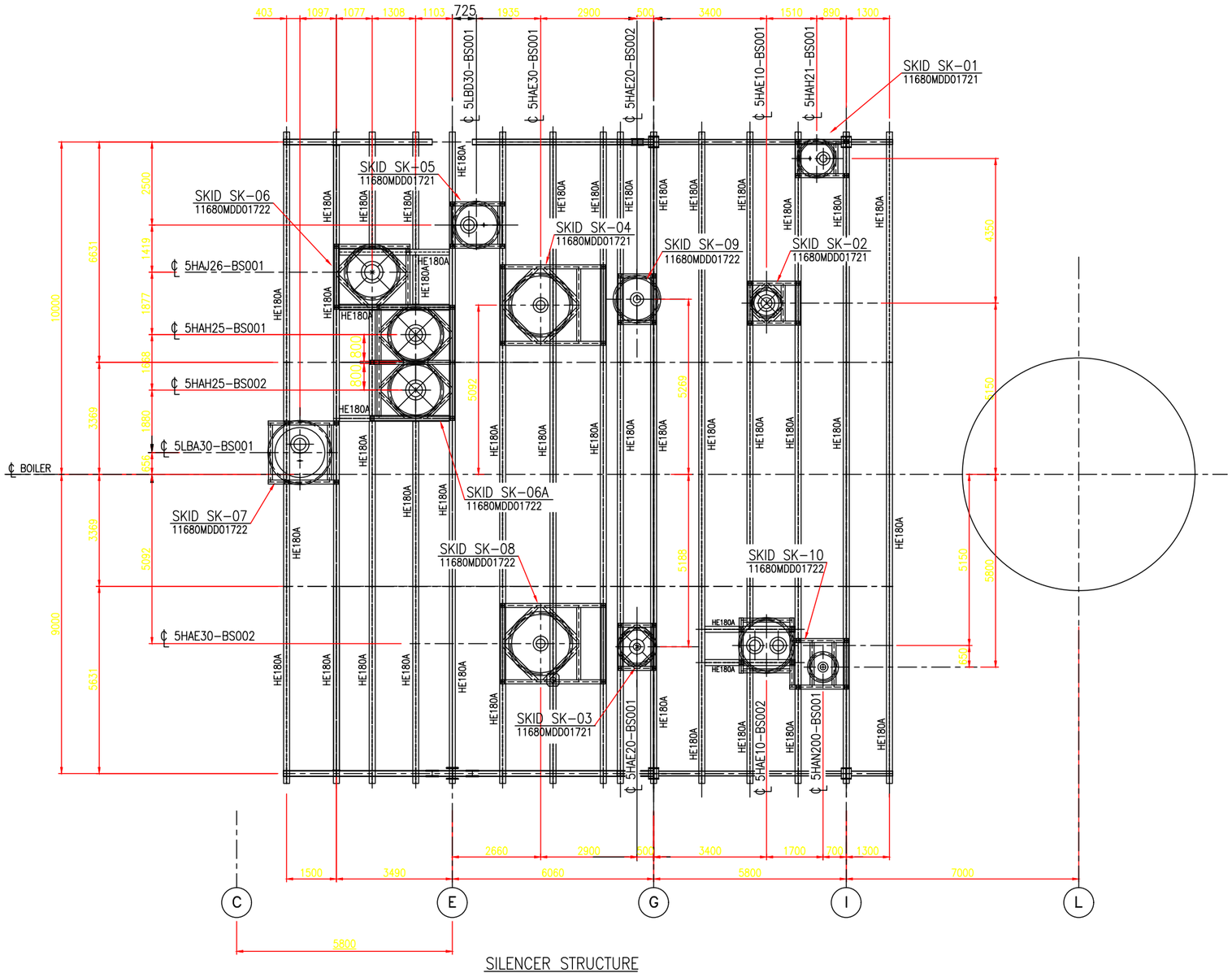

SILENCER STRUCTURE
CANOPY PLAN

ERECTION DWG. No.	PART	DESCRIPTION	MAIN SHAPE	PCS.	1 PC WEIGHT	TOTAL WEIGHT	SHOP DWG. No.
11680MDD01720	SK-01	FRAME	HEA120 N. 2 LEGS LG. 626 mm N. 2 LEGS LG. 516.5 mm	1	157.4	157.4 INCLUDED	11680MDD01721
11680MDD01720	SK-02	FRAME	HEA120 N. 2 LEGS LG. 1035.5 mm N. 2 LEGS LG. 926 mm	1	269.4	269.4 INCLUDED	11680MDD01721
11680MDD01720	SK-03	FRAME	HEA120 N. 2 LEGS LG. 630 mm N. 2 LEGS LG. 555.5 mm	1	202.4	202.4 INCLUDED	11680MDD01721
11680MDD01720	SK-04	FRAME	HEA120 N. 2 LEGS LG. 691.5 mm N. 2 LEGS LG. 422 mm	1	445.4	445.4 INCLUDED	11680MDD01721
11680MDD01720	SK-05	FRAME	HEA120 N. 2 LEGS LG. 826.5 mm N. 2 LEGS LG. 691.5 mm	1	184.4	184.4 INCLUDED	11680MDD01721
11680MDD01720	SK-06	FRAME	HEA120 N. 2 LEG LG. 1137.5 mm N. 1 LEG LG. 945.5 mm N. 1 LEG LG. 827 mm N. 1 LEG LG. 1019.5 mm	1	834.8	377.1 INCLUDED	11680MDD01722
11680MDD01720	SK-06A	FRAME	HEA120 N. 2 LEGS LG. 1041.5 mm N. 2 LEGS LG. 827 mm	1	834.8	457.7 INCLUDED	11680MDD01722
11680MDD01720	SK-07	FRAME	HEA120 N. 2 LEGS LG. 671.5 mm N. 2 LEGS LG. 537.5 mm	1	206.4	206.4 INCLUDED	11680MDD01722
11680MDD01720	SK-08	FRAME	HEA120 N. 2 LEGS LG. 691.5 mm N. 2 LEGS LG. 422 mm	1	445.4	445.4 INCLUDED	11680MDD01722
11680MDD01720	SK-09	FRAME	HEA120 N. 2 LEGS LG. 630 mm N. 2 LEGS LG. 555.5 mm	1	157.4	157.4 INCLUDED	11680MDD01722
11680MDD01720	SK-10	FRAME	HEA120 N. 2 LEGS LG. 754 mm N. 2 LEGS LG. 638.5 mm N. 2 LEGS LG. 626 mm N. 2 LEGS LG. 516.5 mm	1	407.8	407.8 INCLUDED	11680MDD01722
			TOTAL WEIGHT			3311	

MARKING INSTRUCTIONS FOR SHOP DRAWINGS AND ERECTION:

- EACH COMPONENT WILL BE MARKED AS INDICATED:
- EXAMPLE : 1 MARK
  DENOTES UNIT NUMBER — DENOTES ERECTION MARK
- ○ MEANS BILL OF MATERIAL POSITION. -SHOP
- ▭ MEANS MARK'S NUMBER. -ERECTION

WELDINGS:

- ALL WELDS TO BE CONTINUOUS FILLET WELDS UNLESS OTHERWISE SPECIFIED.
- NOT DIMENSIONED FILLET WELDS SHALL HAVE A DIMENSION "a" EQUAL TO 0,7 TIMES. THE MINIMUM THICKNESS TO BE WELDED.
- ⚑ MEANS FIELD WELDING.

a = 0,7 t

MATERIALS:

- BEAMS & PLATES	S275JR EN 10025
- BOLTS	Cl. 8.8 - EN20898 - UNI 5737 / DIN 931 (GALVANIZED)
- NUTS	Cl. 8 - EN20898 - UNI 5588 / DIN 934
- WASHER (N.1 x BOLT)	R80 - EN20898 - UNI 6592 / DIN 125/A

NOTES:

- ALL DIMENSIONS ARE MILLIMETERS UNLESS DIFFERENTLY SHOWN.
- ALL ELEVATIONS REFER TO QUOTE +0,00 FINISHED GROUND FLOOR.
- ARRANGEMENT SHOWN IS FOR (1) ONE UNIT, (1) ONE UNIT ON THIS CONTRACT.
- FOR ALL OTHER MANUFACTURING, TESTING AND PAINTING INSTRUCTIONS REFER TO M.R. 11680MDR06200.

ERECTION/LIFTING PROCEDURE:

1) THE FABRICATOR/ERECTOR IS RESPONSABLE FOR DESIGN & SUPPLY OF ANY EXTRA LIFTING ATTACHMENTS REQUIRED, INCLUDING TRUNNIONS, BRACING AND LUGS ETC. DETAILS OF LIFTING ATTACHMENTS TO BE SUBMITTED TO A.P.I. FOR APPROVAL. NOTE THAT ANY INTERNAL TRUNNIONS OR BRACING MUST BE REMOVED AFTER ERECTION.

REFERENCE DRAWINGS:

- FOR CANOPY STRUCTURE ASSEMBLY PLANS & SECTIONS SEE DWG. N. 11680MDD01700
- FOR SILENCERS SUPPORT STRUCTURE DETAILS SK-01 ÷ SK-05 SEE DWG. N. 11680MDD01721
- FOR SILENCERS SUPPORT STRUCTURE DETAILS SK-06 ÷ SK-10 SEE DWG. N. 11680MDD01722
- FOR SILENCER DRAWINGS SEE DWG. N. 11680MAD23200 From Sh.1 To Sh.13
- FOR SILENCERS SUPPORT STRUCTURE MATERIAL FORECAST SEE DOC. N. 11680MDF01720

Rev. 0 and above are RELEASED for ERECTION

KKS DWG. No. 5-HA-000-API-331

REV.	DATA Date	DESCRIZIONE/Description	DIS. Dwg.	CONTR. Checked	VISTO Approv.
3	18-10-05	REVISED FOR LABELLING 'AS BUILT' ONLY. NO OTHER CHANGES	A.S.	A.R.	A.N.
2	15-04-05	RELOCATION SKID "SK-03" & "SK-09"	A.S.	A.R.	A.N.
1	14-03-05	REVISED WHERE INDICATED △1	M.B.	A.R.	A.N.

QUESTO DISEGNO E' PROPRIETA' DELLA Alstom Power Italia SpA
A TERMINE DI LEGGE NE E' VIETATA LA RIPRODUZIONE E LA COMUNICAZIONE A TERZI
This Drawing is the Property of Alstom Power Italia SpA
The reproduction for any use by a third party is forbidden by law.

LAVRION - METKA
CANOPY
SILENCER STRUCTURE ASSEMBLY

ALSTOM
ALSTOM POWER ITALIA S.p.A.

SCALA Scale	FIRME/Signature	DATA/Date
1:75	DIS./Dwg. L.L.	03/12/04
	CONTR./Check. A.R.	10/12/04
	VISTO/Approv. A.N.	10/12/04

RIFERIMENTO N.
Reference N.

N°. DISEGNO/Drawing No. 11680MDD01720

TAV./Sh. 1 / DI of

REV. 1 2 3

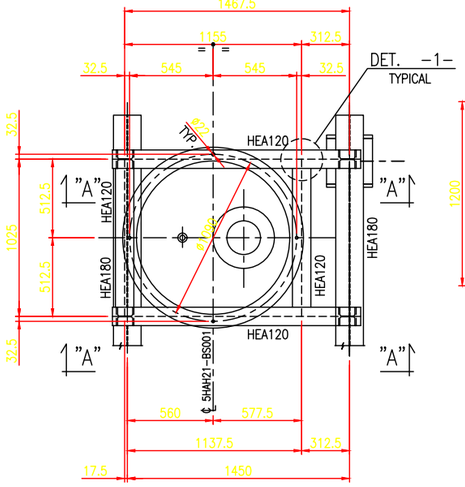

SKID SK-01
SILENCER 5HAH21-BS001

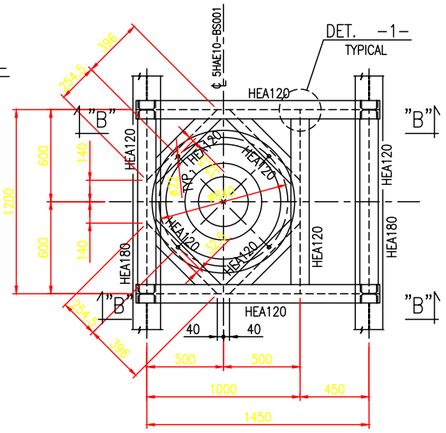

SKID SK-02
SILENCER 5HAE10-BS001

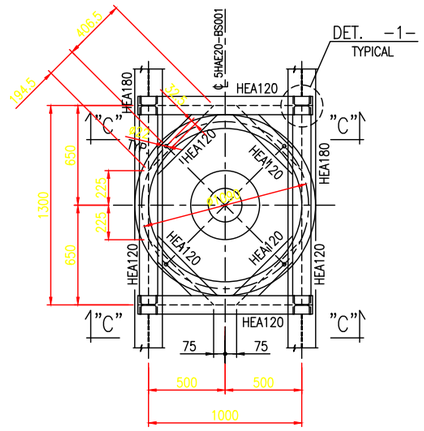

SKID SK-03
SILENCER 5HAE20-BS001

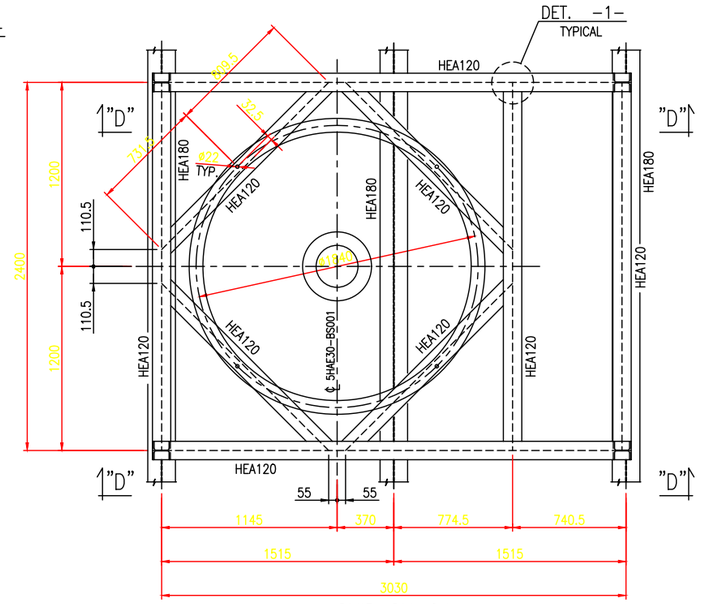

SKID SK-04
SILENCER 5HAE30-BS001

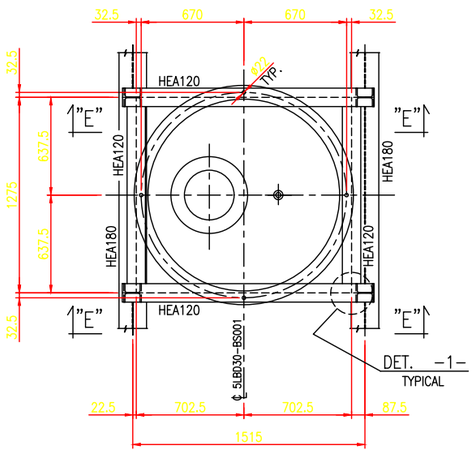

SKID SK-05
SILENCER 5LBD30-BS001

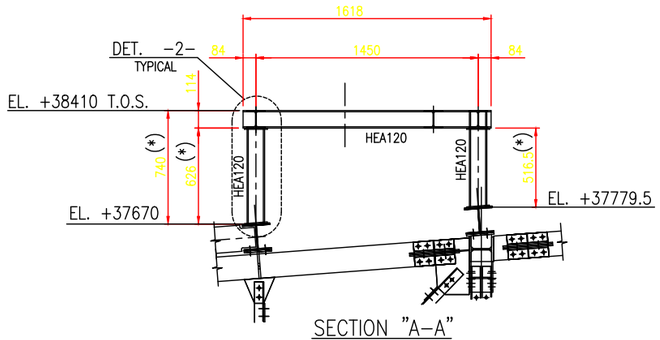

SECTION "A-A"
(*) TO BE CHECKED ON SITE

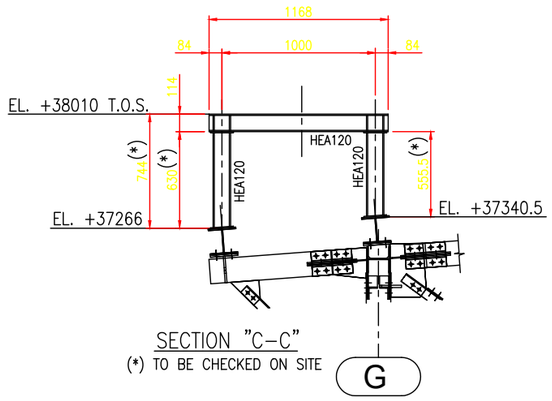

SECTION "C-C"
(*) TO BE CHECKED ON SITE

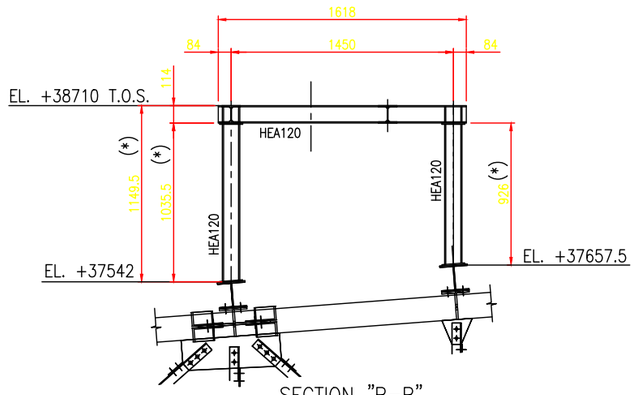

SECTION "B-B"
(*) TO BE CHECKED ON SITE

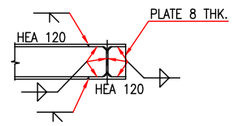

DETAIL -1-
(SCALE 1:10)
TYPICAL

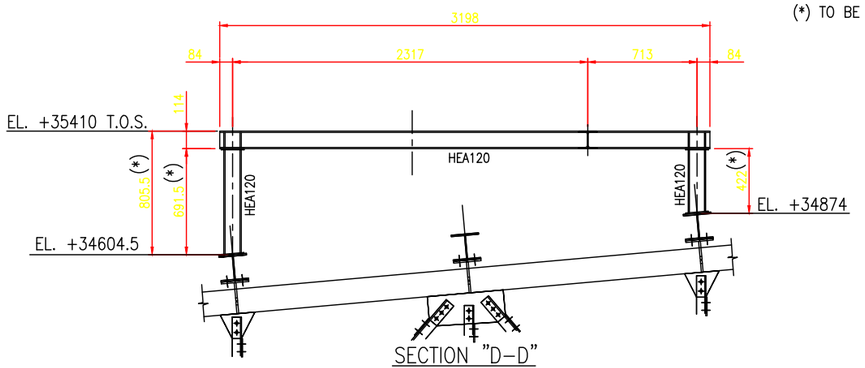

SECTION "D-D"
(*) TO BE CHECKED ON SITE

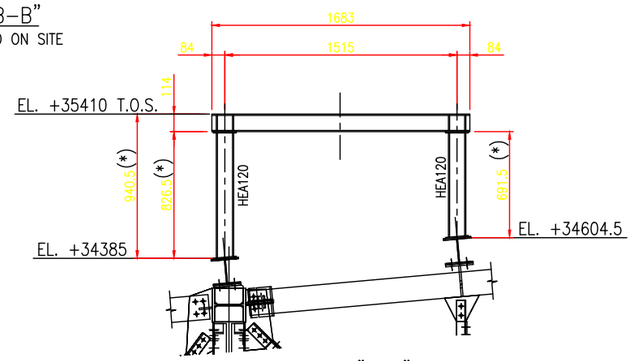

SECTION "E-E"
(*) TO BE CHECKED ON SITE

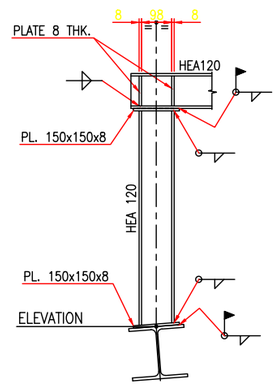

DETAIL -2-
(SCALE 1:10)
TYPICAL

REFERENCE DRAWINGS:

- FOR SILENCER SUPPORTS ASSEMBLY & NOTES SEE DWG. N. 11680MDD01720
- FOR SILENCER SUPPORTS SK-06/07/08/09/10 SEE DWG. N. 11680MDD01722
- FOR SILENCER DRAWINGS SEE DWG. N. 11680MAD23200 From Sh.1 To Sh.13

Rev. 0 and above are RELEASED for ERECTION

KKS DWG. No. 5-HA-000-API-332

REV.	DATA Date	DESCRIZIONE/Description	DIS. Dwg.	CONTR. Checked	VISTO Approv.
2	18-10-05	REVISED FOR LABELLING "AS BUILT" ONLY. NO OTHER CHANGES	A.S.	A.R.	A.N.
1	14-03-05	REVISED WHERE INDICATED ⚠1	M.B.	A.R.	A.N.

QUESTO DISEGNO E' PROPRIETA' DELLA Alstom Power Italia SpA
A TERMINE DI LEGGE NE E' VIETATA LA RIPRODUZIONE E LA COMUNICAZIONE A TERZI
This Drawing is the Property of Alstom Power Italia SpA
The reproduction for any use by a third party is forbidden by law.

SCALA Scale: 1:20

FIRME/Signature	DATA/Date
DIS./Drwg. L.L.	10/01/05
CONTR./Check.A.R.	20/01/05
VISTO/Approv.A.N.	20/01/05

LAVRION - METKA
CANOPY
SILENCER STRUCTURE
DETAIL SKID SK-01/02/03/04/05

RIFERIMENTO N.
Reference N.

N°. DISEGNO/Drawing No. 11680MDD01721

TAV. / DI
Sh. 1 / of

REV. 1 2

ALSTOM
ALSTOM POWER ITALIA S.p.A.

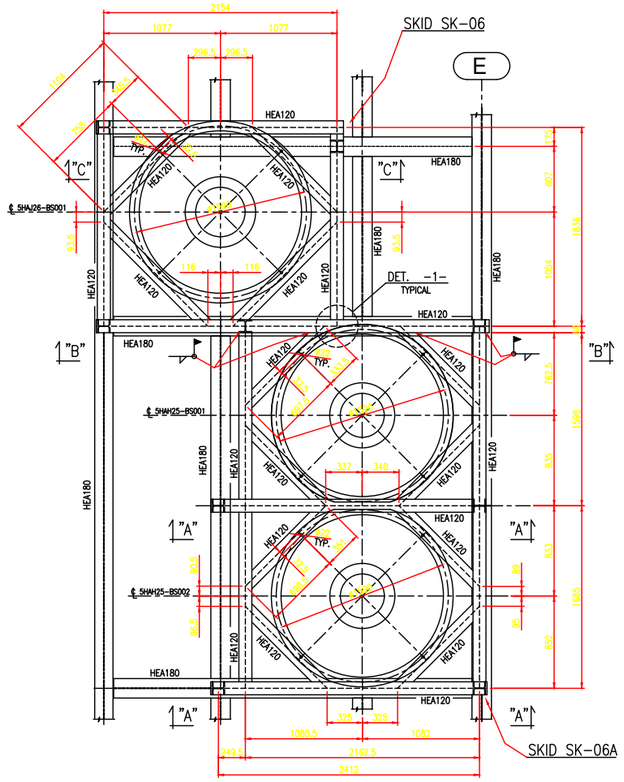

SKID SK-06
SILENCER 5HAJ26-BS001

SKID SK-06A
SILENCER 5HAH25-BS001
SILENCER 5HAH25-BS002

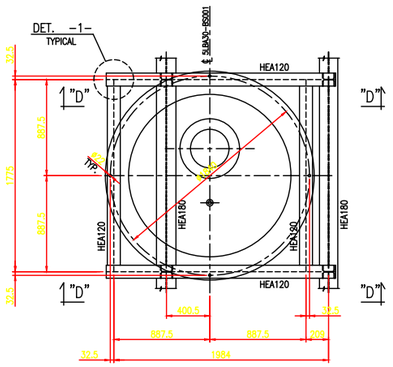

SKID SK-07
SILENCER 5LBA30-BS001

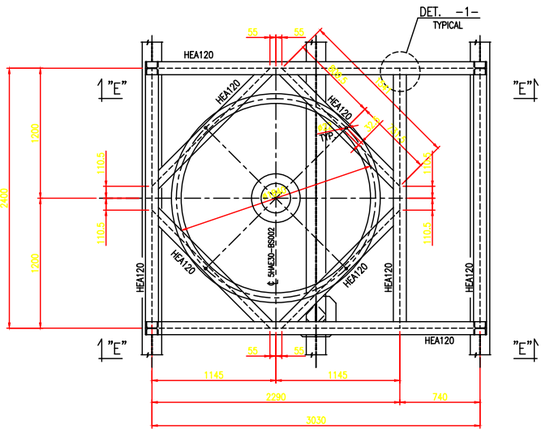

SKID SK-08
SILENCER 5HAE30-BS002

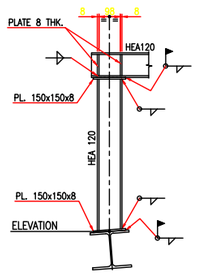

DETAIL -2-
(SCALE 1:10)
TYPICAL

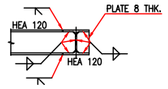

DETAIL -1-
(SCALE 1:10)
TYPICAL

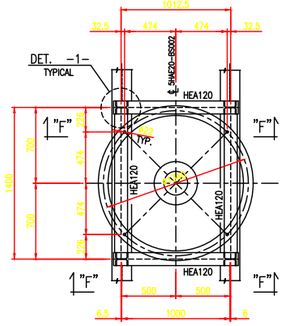

SKID SK-09
SILENCER 5HAE20-BS002

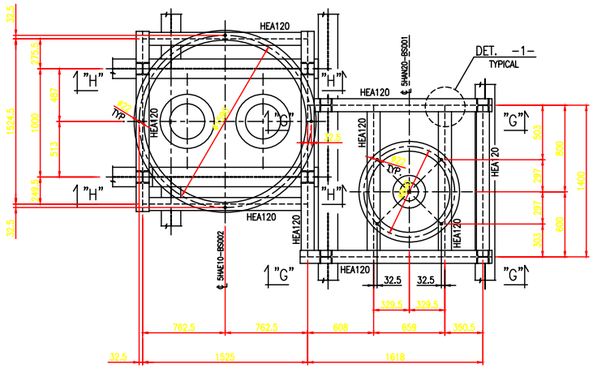

SKID SK-10
SILENCER 5HAE10-BS002
SILENCER 5HAN20-BS001

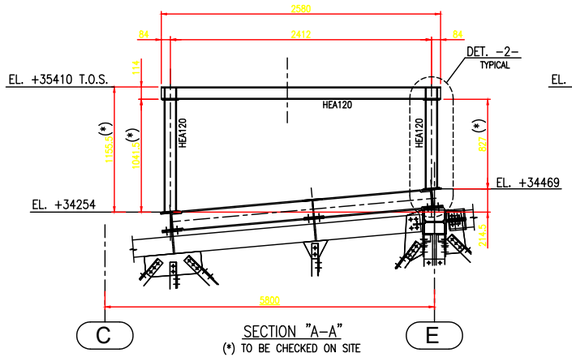

SECTION "A-A"
(*) TO BE CHECKED ON SITE

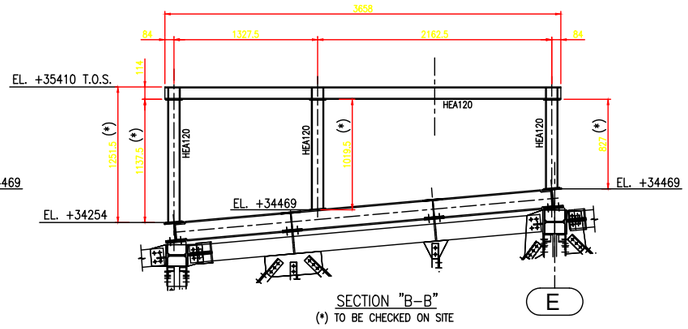

SECTION "B-B"
(*) TO BE CHECKED ON SITE

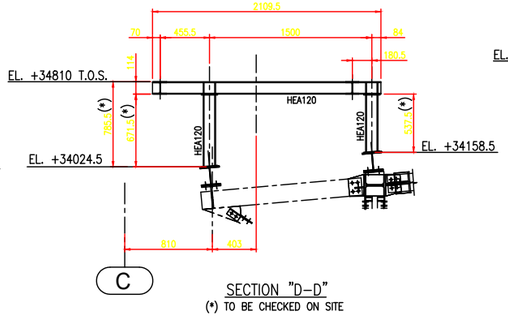

SECTION "D-D"
(*) TO BE CHECKED ON SITE

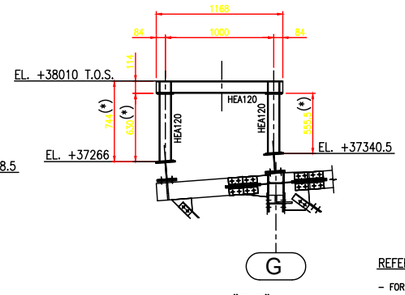

SECTION "F-F"
(*) TO BE CHECKED ON SITE

REFERENCE DRAWINGS:

- FOR SILENCER SUPPORTS ASSEMBLY & NOTES SEE DWG. N. 11680MDD01720
- FOR SILENCER SUPPORTS SK-01/02/03/04/05 SEE DWG. N. 11680MDD01721
- FOR SILENCER DRAWINGS SEE DWG. N. 11680MAD23200 From Sh.1 To Sh.13

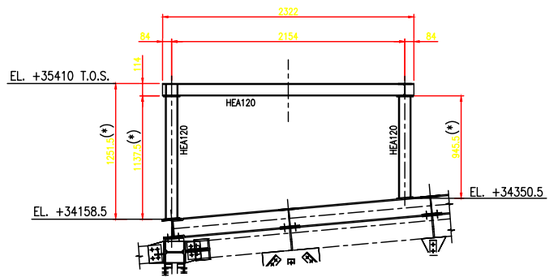

SECTION "C-C"
(*) TO BE CHECKED ON SITE

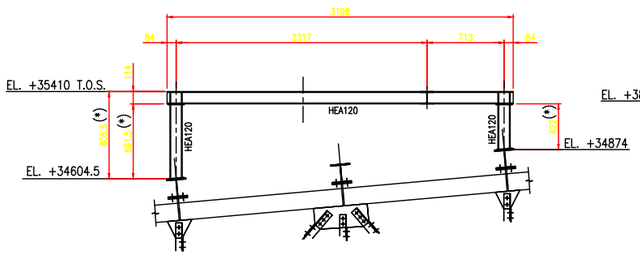

SECTION "E-E"
(*) TO BE CHECKED ON SITE

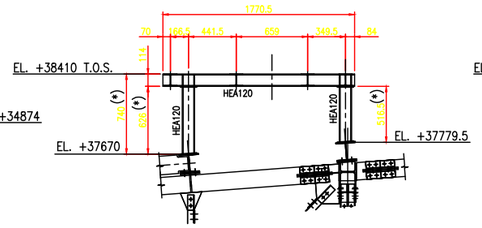

SECTION "G-G"
(*) TO BE CHECKED ON SITE

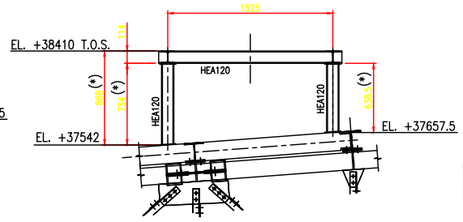

SECTION "H-H"
(*) TO BE CHECKED ON SITE

Rev. 0 and above are RELEASED for ERECTION

KKS DWG. No. 5-HA-000-API-333

REV.	DATA Date	DESCRIZIONE/Description	DIS. Dsg.	CONTR. Checked	VISTO Approv.
2	18-10-05	REVISED FOR LABELLING "AS BUILT" ONLY. NO OTHER CHANGES	A.S.	A.R.	A.N.
1	14-03-05	REVISED WHERE INDICATED △1	M.B.	A.R.	A.N.

Questo documento è proprietà della Alstom Power Italia S.p.A. e non può essere riprodotto o trasferito a terzi senza il nostro consenso. Il destinatario del presente documento è responsabile per la custodia di esso. This document is the property of Alstom Power Italia S.p.A. The recipient is responsible for the safe keeping of this document by law.

SCALA Scale 1:20

FIRME/Signature	DATA/Date
DIS./Dsg. L.L.	10/01/05
CONTR./Check A.R.	20/01/05
VISTO/Approv. A.N.	20/01/05

LAVRION – METKA
CANOPY
SILENCER STRUCTURE
DETAILS SKID SK-06/07/08/09/10

RIFERIMENTO N. Reference N.

N°. DISEGNO/Drawing No. 11680MDD01722

TAV./Sh. 1 DI/OF /

REV. 1 2

ALSTOM
ALSTOM POWER ITALIA S.p.A.