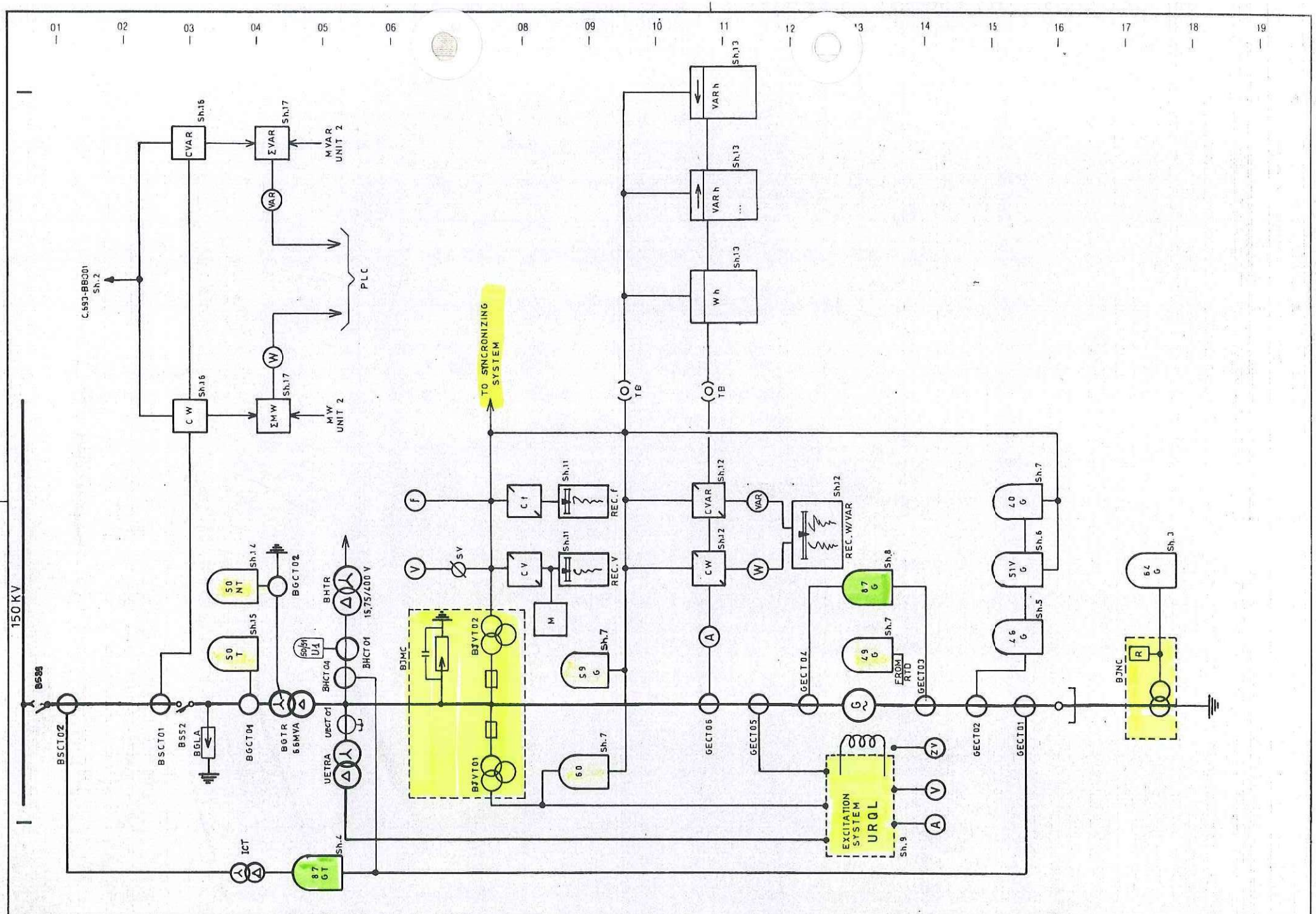

R	DATA	MODIFICHE	DIS	CONTR	R	DATA	MODIFICHE	DIS	CONTR
5	13.1.84	GENERAL REVISION							
1	29-10-82								

GIE

UFF. HB | DIS. ER | CONTR. | APPR. | DATA.

MAIN UNIT SINGLE LINE DIAGRAM

C693 BB005

Fg. 2 Seg. 3