Αριθμός Πρόσκλησης : **ΔΠΛΠ 1668**

Αντικείμενο: «Μηχανουργική υποστήριξη συντήρησης συγκροτημάτων μέσης ισχύος μονάδας V ΑΗΣ Κερατέας-Λαυρίου»

ΟΡΟΙ ΚΑΙ ΟΔΗΓΙΕΣ ΠΡΟΣ ΠΡΟΣΦΕΡΟΝΤΕΣ

ΔΗΜΟΣΙΑ ΕΠΙΧΕΙΡΗΣΗ ΗΛΕΚΤΡΙΣΜΟΥ Α.Ε.
ΔΙΕΥΘΥΝΣΗ ΠΡΟΜΗΘΕΙΩΝ ΛΕΙΤΟΥΡΓΙΩΝ ΠΑΡΑΓΩΓΗΣ

ΑΝΤΙΚΕΙΜΕΝΟ: «Μηχανουργική υποστήριξη συντήρησης συγκροτημάτων μέσης ισχύος Μονάδας V ΑΗΣ Κερατέας – Λαυρίου».

ΟΡΟΙ ΚΑΙ ΟΔΗΓΙΕΣ ΠΡΟΣ ΠΡΟΣΦΕΡΟΝΤΕΣ

Η Δημόσια Επιχείρηση Ηλεκτρισμού Α.Ε. (εφεξής ΔΕΗ ή Εταιρεία), Χαλκοκονδύλη 30, Τ.Κ. 104 32, Αθήνα, προσκαλεί κατά τις διατάξεις:

- του Κανονισμού Έργων, Προμηθειών και Υπηρεσιών της ΔΕΗ Α.Ε. (ΚΕΠΥ) (Απόφαση Δ.Σ. 4/09.02.2022) που έχει αναρτηθεί στην επίσημη ιστοσελίδα της ΔΕΗ στην ηλεκτρονική Διεύθυνση https://eprocurement.dei.gr, και

- της παρούσας Πρόσκλησης,

όλους τους ενδιαφερόμενους, σε Ηλεκτρονική Διαδικασία Επιλογής σε ένα (1) Στάδιο για τη σύναψη σύμβασης με αντικείμενο «Μηχανουργική υποστήριξη συντήρησης συγκροτημάτων μέσης ισχύος Μονάδας V ΑΗΣ Κερατέας – Λαυρίου».

Η Διαδικασία διενεργείται με το Σύστημα Προσφοράς με ελεύθερη συμπλήρωση ανοικτού Τιμολογίου

Κριτήριο επιλογής του Αντισυμβαλλομένου αποτελεί η πλέον συμφέρουσα από οικονομική άποψη προσφορά η οποία προσδιορίζεται βάσει της χαμηλότερης τιμής.

Ο συνολικός Προϋπολογισμός, κατά την εκτίμηση της Εταιρείας ανέρχεται σε **€ 328.815.00.** Ο Προϋπολογισμός αυτός δεν αποτελεί το ανώτατο όριο προσφοράς.

Άρθρο 1
Αρμόδια Διεύθυνση της Εταιρείας για τη Διαδικασία Επιλογής - Τόπος, χρόνος υποβολής και αποσφράγισης προσφορών

1.1 Αρμόδια Διεύθυνση της Εταιρείας της ΔΕΗ για τη Διαδικασία είναι η Διεύθυνση Προμηθειών Λειτουργιών Παραγωγής (ΔΠΛΠ), οδός Χαλκοκονδύλη αριθ.22, Τ.Κ.10432, Αθήνα , τηλέφωνο 2105230301.
Πληροφορίες παρέχονται από την κα. Ε. Βασιλοπούλου και τον κ. Ι. Καρολεμέα με Ηλεκτρονικό Ταχυδρομείο στις διευθύνσεις e.vasilopoulou@dei.gr και i.karolemeas@dei.gr και για τη χορήγηση Βεβαίωση Επίσκεψης από τον κ. Ν .Πέτρου , με ηλεκτρ. ταχυδρομείο στη διεύθυνση, n.petrou@dei.gr, τηλ. (+30) 2292064333 και κ. Γ. Θεοχαρόπουλο με ηλεκτρ. ταχυδρομείο στη διεύθυνση g.theocharopoulos@dei.gr , τηλ. (+30) 2292064333.

1.2 Η ηλεκτρονική διαδικασία θα πραγματοποιηθεί με χρήση της πλατφόρμας "tenderONE" της εταιρείας cosmoONE του Συστήματος Ηλεκτρονικών Συμβάσεων ΔΕΗ, εφεξής Σύστημα, στην ηλεκτρονική διεύθυνση www.cosmo-one.gr ή www.marketsite.gr .
Το Σύστημα κατ' ελάχιστο όριο διασφαλίζει, με τεχνικά μέσα και κατάλληλες διαδικασίες, ότι:
α) Καθορίζεται με ακρίβεια η ώρα και η ημερομηνία της παραλαβής των προσφορών.
β) Εξασφαλίζεται ευλόγως ότι κανείς δεν θα έχει πρόσβαση πριν από τις καθορισμένες ημερομηνίες στις πληροφορίες που διαβιβάζονται δυνάμει των ως άνω απαιτήσεων.

γ) Μόνον εξουσιοδοτημένα πρόσωπα μπορούν να καθορίζουν ή να τροποποιούν τις ημερομηνίες αποσφράγισης των παραληφθεισών προσφορών.
δ) Στις διάφορες φάσεις της Διαδικασίας Επιλογής, η πρόσβαση στο σύνολο ή σε μέρος των υποβαλλομένων πληροφοριών είναι δυνατή μόνον από δεόντως εξουσιοδοτημένα πρόσωπα.
ε) Η παροχή πρόσβασης στις διαβιβαζόμενες πληροφορίες είναι δυνατή μόνο από εξουσιοδοτημένα πρόσωπα και μόνον μετά την προκαθορισμένη ημερομηνία και ώρα.
στ) Στις πληροφορίες που παρελήφθησαν και αποσφραγίσθηκαν κατ' εφαρμογή των εν λόγω απαιτήσεων έχουν πρόσβαση μόνον τα πρόσωπα τα εξουσιοδοτημένα να λάβουν γνώση.
ζ) Σε περίπτωση παραβίασης ή απόπειρας παραβίασης των απαγορεύσεων ή των όρων πρόσβασης που αναφέρονται στα στοιχεία β) έως στ), εξασφαλίζεται ευλόγως ότι οι παραβιάσεις ή οι απόπειρες παραβίασης είναι σαφώς ανιχνεύσιμες.

1.3 Απαραίτητη προϋπόθεση για την εξασφάλιση της δυνατότητας συμμετοχής των ενδιαφερόμενων είναι η εγγραφή τους στο Σύστημα. Κατόπιν επιτυχούς εγγραφής θα τους δοθούν οι Κωδικοί Πρόσβασης στο Σύστημα που είναι απαραίτητοι για τη σύνδεσή τους και για την υποβολή της προσφοράς τους.

Η εγγραφή δεν επιφέρει κανένα κόστος για τους ενδιαφερόμενους
Οι ενδιαφερόμενοι μπορούν να κατεβάσουν δωρεάν από την επίσημη ιστοσελίδα (site) της Εταιρείας, https://eprocurement.dei.gr →Ηλεκτρονική Υποβολή, τις Οδηγίες Χρήσης για την Εγγραφή και το Εγχειρίδιο Χρήσης του Συστήματος.
Η παραπάνω διαδικασία δεν απαιτείται για τους ενδιαφερόμενους που έχουν ήδη κωδικούς πρόσβασης στο Σύστημα, συνιστάται όμως να γίνει έγκαιρα η επικαιροποίηση των στοιχείων τους με την είσοδό τους σε αυτό.
Επιπλέον, στην περίπτωση που δεν υπάρχει προηγούμενη συνεργασία του ενδιαφερόμενου με τη ΔΕΗ, θα πρέπει να επικοινωνεί με την αρμόδια Διεύθυνση της Εταιρείας για να του αποσταλεί ηλεκτρονικά σχετική φόρμα, προκειμένου να συμπληρώσει τα απαραίτητα στοιχεία για την καταχώρησή του από τη ΔΕΗ στο Σύστημα Ηλεκτρονικών Συμβάσεων ΔΕΗ.

1.4 Για την υποβολή προσφοράς στη Διαδικασία Επιλογής οι ενδιαφερόμενοι απαιτείται να διαθέτουν προηγμένη ηλεκτρονική υπογραφή (qualified digital signature) σε περίπτωση φυσικού προσώπου του ιδίου και σε περίπτωση νομικού προσώπου του/των νομίμου/ων εκπροσώπου/ων του, η οποία να έχει εκδοθεί από πάροχο υπηρεσιών πιστοποίησης (qualified certificate services). Να σημειωθεί ότι η χρονοσήμανση της προηγμένης ηλεκτρονικής υπογραφής θα πρέπει να προέρχεται από αναγνωρισμένη αρχή (timestamp authority), όπως για παράδειγμα η «Εθνική Πύλη Ερμής» ή το «Ελληνικό Ινστιτούτο Μετρολογίας».
Οι αλλοδαποί ενδιαφερόμενοι δεν έχουν την υποχρέωση να υπογράφουν τα δικαιολογητικά του παρόντος με χρήση προηγμένης ηλεκτρονικής υπογραφής, αλλά μπορεί να τα αυθεντικοποιούν με οποιονδήποτε άλλον πρόσφορο τρόπο, εφόσον στη χώρα προέλευσής τους δεν είναι υποχρεωτική η χρήση προηγμένης ψηφιακής υπογραφής σε διαδικασίες σύναψης συμβάσεων. Στις περιπτώσεις αυτές η προσφορά συνοδεύεται με δήλωση, στην οποία δηλώνεται ότι, στη χώρα προέλευσης δεν προβλέπεται η χρήση προηγμένης ψηφιακής υπογραφής ή ότι, στη χώρα προέλευσης δεν είναι υποχρεωτική η χρήση προηγμένης ψηφιακής υπογραφής για τη συμμετοχή σε διαδικασίες σύναψης συμβάσεων.

1.5 Οι προσφορές υποβάλλονται από τους ενδιαφερόμενους ηλεκτρονικά με ημερομηνία έναρξης της υποβολής τις 06.06.2022/12:00 και καταληκτική ημερομηνία και ώρα υποβολής τις 24.06.2022/12:00.
Μετά την παρέλευση της ως άνω καταληκτικής ημερομηνίας και ώρας, δεν υπάρχει η δυνατότητα υποβολής προσφοράς.

Άρθρο 2
Τόπος, συνοπτική περιγραφή και ουσιώδη χαρακτηριστικά του αντικειμένου της σύμβασης – Δικαιώματα προαίρεσης

2.1 Αντικείμενο: Η παροχή υπηρεσίας αφορά τη μηχανουργική υποστήριξη σε μηχανουργείο για την εκτέλεση της συντήρησης επτά (7) αντλητικών συγκροτημάτων 6kV της Μονάδας V ΑΗΣ Κερατέας-Λαυρίου που είναι ο κύριος βοηθητικός εξοπλισμός της Μονάδας. Τα επτά αντλητικά συγκροτήματα είναι:

- Δύο (2) αντλίες κυκλοφορίας θαλάσσης τύπου 45APMA
- Δύο (2) αντλίες συμπυκνώματος τύπου 243- A PKD-4
- Δύο (2) τροφοδοτικές αντλίες Μέσης Πίεσης τύπου 3x11WXH5
- Μία (1) τροφοδοτική αντλία υψηλής πίεσης τύπου 6x14WXH10

Ο Αντισυμβαλλόμενος θα παραλάβει από το συνεργείο Συντήρησης του ΑΗΣ Κερατέας-Λαυρίου τις παραπάνω αντλίες βάσει συγκεκριμένου χρονικού προγραμματισμού και θα εκτελέσει τις παρακάτω εργασίες:

- Παραλαβή και μεταφορά από το μηχανουργείο του ΑΗΣ Κερατέας-Λαυρίου της αντλίας επί της μεταλλικής της βάσης και του αντίστοιχου κινητήρα 6KV με δικά του μέσα και κόστος.
- Αποσυναρμολόγηση της αντλίας σύμφωνα με τις οδηγίες του τεχνικού εγχειριδίου, που επισυνάπτεται στο παράρτημα Α.
- Αποσυναρμολόγηση, επιθεώρηση, εκτέλεση ηλεκτρικών μετρήσεων του κινητήρα της αντλίας σύμφωνα με τις οδηγίες του ίδιου τεχνικού εγχειριδίου
- Επιθεώρηση και επισκευή των επιμέρους στρατηγικών ανταλλακτικών της αντλίας.
- Συναρμολόγηση της αντλίας με καινούργια αναλώσιμα ανταλλακτικά που είτε θα προμηθεύσει ή θα κατασκευάσει ο Αντισυμβαλλόμενος.
- Συναρμολόγηση του κινητήρα με καινούργια αναλώσιμα ανταλλακτικά.
- Μεταφορά της αντλίας και του κινητήρα στις εγκαταστάσεις του ΑΗΣ Κερατέας-Λαυρίου.

όπως αναλυτικά περιγράφονται στο τεύχος της Τεχνικής Περιγραφής.

2.2 Προθεσμίες

2.2.1 Τμηματικές Προθεσμίες

2.2.1.1 Οι εργασίες που αφορούν τη συντήρηση της τροφοδοτικής αντλίας Υ.Π. τύπου 6x14WXH10 θα πραγματοποιηθούν εντός 22 ημερολογιακών ημερών.
Οι εργασίες της παραγράφου 1.1. της Τεχνικής Περιγραφής αναμένεται να εκτελεσθούν από 03/10/2022 έως και 22/10/2022 παρουσία τεχνικού της Εταιρείας.
Για την ακριβή ημερομηνία έναρξης ο Αντισυμβαλλόμενος θα ενημερωθεί τουλάχιστον δέκα (10) ημέρες νωρίτερα. Εντός του παραπάνω χρονικού διαστήματος οφείλει να κινητοποιηθεί.
Οι τμηματικές προθεσμίες εκτέλεσης των εργασιών στα επιμέρους αντλητικά συγκροτήματα καθορίζονται στην παράγραφο 1.1 της Τεχνικής Περιγραφής και στο αναλυτικό πρόγραμμα που θα καθορισθεί.

2.2.1.2 Οι εργασίες που αφορούν τη συντήρηση της αντλίας συμπυκνώματος τύπου 243-APKD-4 θα πραγματοποιηθούν εντός 12 ημερολογιακών ημερών.
Οι εργασίες για την πρώτη αντλία θα εκτελεσθούν από 28/09/2022 έως και 08/10/2022 ενώ για τη δεύτερη αντλία θα εκτελεσθούν από 12/11/2022 έως και 23/11/2022.
Για την ακριβή ημερομηνία έναρξης ο Αντισυμβαλλόμενος θα ενημερωθεί τουλάχιστον δέκα (10) ημέρες νωρίτερα. Εντός του παραπάνω χρονικού διαστήματος οφείλει να κινητοποιηθεί.

Οι τμηματικές προθεσμίες εκτέλεσης των εργασιών στα επιμέρους αντλητικά συγκροτήματα καθορίζονται στην παράγραφο 1.2 της Τεχνικής Περιγραφής και στο αναλυτικό πρόγραμμα που θα καθορισθεί.

2.2.1.3 Οι εργασίες που αφορούν τη συντήρηση της αντλίας κυκλοφορίας θαλάσσης τύπου 45ΑΡΜΑ θα πραγματοποιηθούν εντός 15 ημερολογιακών ημερών.
Οι εργασίες για την πρώτη αντλία θα εκτελεσθούν από 08/10/2022 έως και 21/10/2022 ενώ για τη δεύτερη από 03/11/2022 έως και 16/11/2022.
Για την ακριβή ημερομηνία έναρξης ο Αντισυμβαλλόμενος θα ενημερωθεί τουλάχιστον δέκα (10) ημέρες νωρίτερα. Εντός του παραπάνω χρονικού διαστήματος οφείλει να κινητοποιηθεί.
Οι τμηματικές προθεσμίες εκτέλεσης των εργασιών στα επιμέρους αντλητικά συγκροτήματα καθορίζονται στην παράγραφο 1.3 της Τεχνικής Περιγραφής και στο αναλυτικό πρόγραμμα που θα καθορισθεί.

2.2.1.4 Οι εργασίες που αφορούν τη συντήρηση της τροφοδοτικής αντλίας Μέσης Πίεσης τύπου 3x11WXH5 θα πραγματοποιηθούν εντός 10 ημερολογιακών ημερών.
Οι εργασίες για την πρώτη αντλία θα εκτελεσθεί από 24/10/2022 έως και 03/11/2022 ενώ για τη δεύτερη αντλία από 09/11/2022 έως και 19/11/2022.
Για την ακριβή ημερομηνία έναρξης ο Αντισυμβαλλόμενος θα ενημερωθεί τουλάχιστον δέκα (10) ημέρες νωρίτερα. Εντός του παραπάνω χρονικού διαστήματος οφείλει να κινητοποιηθεί.
Οι τμηματικές προθεσμίες εκτέλεσης των εργασιών στα επιμέρους αντλητικά συγκροτήματα καθορίζονται στην παράγραφο 1.4 της Τεχνικής Περιγραφής και στο αναλυτικό πρόγραμμα που θα καθορισθεί.

2.2.2 Συνολική Προθεσμία
Το σύνολο των υπηρεσιών θα εκτελεσθούν συνολικά σε εξήντα (60) ημερολογιακές ημέρες. Η ημερομηνία έναρξης υπηρεσιών είναι η ημερομηνία παραλαβής της πρώτης αντλίας από τις εγκαταστάσεις της ΔΕΗ. Στο χρόνο εκτέλεσης των εργασιών δεν συμπεριλαμβάνονται χρόνοι παράδοσης στρατηγικών ανταλλακτικών από πλευράς ΔΕΗ ή αποκατάστασης μη αναμενόμενων βλαβών που περιγράφονται στη Τεχνική Περιγραφή ή στο manual του κατασκευαστή των αντλιών.

2.3 Δικαίωμα Προαίρεσης: Η ΔΕΗ Α.Ε. διατηρεί το δικαίωμα πριν, κατά ή μετά την ανάθεση της παροχής υπηρεσίας, να μειώσει το αντικείμενο της Σύμβασης υπό την προϋπόθεση ότι η διαφοροποίηση του συνολικού τιμήματος ανάθεσης δεν υπερβαίνει το 30% στη μείωση χωρίς ο Αντισυμβαλλόμενος να δικαιούται οποιαδήποτε αποζημίωση, σύμφωνα με τα οριζόμενα στο άρθρο 4 του Συμφωνητικού.

Άρθρο 3
Συμμετοχή στη Διαδικασία Επιλογής

3.1 Δικαίωμα συμμετοχής
Στη Διαδικασία Επιλογής μπορούν να συμμετάσχουν όλοι οι ενδιαφερόμενοι (φυσικά ή νομικά πρόσωπα ή συμπράξεις/ενώσεις αυτών), οι οποίοι είναι εγκατεστημένοι σε οποιαδήποτε χώρα και ικανοποιούν πλήρως όλες τις απαιτήσεις του παρόντος άρθρου.

3.2 Κριτήρια επιλογής
Κάθε Προσφέρων πρέπει σύμφωνα με τους όρους και τις απαιτήσεις της Πρόσκλησης να ικανοποιεί πλήρως όλα τα ακόλουθα κριτήρια επιλογής:

3.2.Α Καταλληλότητα

3.2.Α.1 Σε περίπτωση φυσικού ή νομικού προσώπου το ίδιο και σε περίπτωση σύμπραξης/ένωσης προσώπων κάθε μέλος της να είναι εγγεγραμμένο, στα οικεία επαγγελματικά ή εμπορικά μητρώα που τηρούνται στην Ελλάδα ή στη χώρα εγκατάστασής του για επαγγελματική δραστηριότητα σχετική με το αντικείμενο της σύμβασης.

3.2.Β Τεχνική και επαγγελματική ικανότητα

3.2.Β.1 Απαιτούμενη εμπειρία

Να έχει υλοποιήσει επιτυχώς, κατά τη διάρκεια των τελευταίων δέκα (10) ετών, σε περίπτωση φυσικού ή νομικού προσώπου το ίδιο και σε περίπτωση σύμπραξης/ένωσης προσώπων τα μέλη της αθροιστικά, συμβάσεις με αντικείμενο:

α) σε μηχανολογικές κατασκευές και σε σχεδιασμό μηχανολογικών κατασκευών βιομηχανικών εφαρμογών με διαδικασία αντιγραφής κατασκευής (reverse engineering).
και
β) σε συντήρηση κινητήρων μέσης τάσης (σχεδιασμού multi turn form wound τυλίγματα στάτη).

Η ως άνω εμπειρία μπορεί να αφορά διαφορετικές συμβάσεις.

Για τον έλεγχο και την πιστοποίηση της παραπάνω απαιτούμενης εμπειρίας, οι Προσφέροντες θα πρέπει απαραίτητα να υποβάλουν στο Φάκελο Β της προσφοράς τους τα σχετικά αποδεικτικά στοιχεία στα οποία συμπεριλαμβάνονται:

- πλήρως συμπληρωμένους τους Πίνακες Εμπειρίας και Συστάσεων Α και Β σύμφωνα με τα συνημμένα στο τεύχος 1 της Πρόσκλησης σχετικά Υποδείγματα.

- Συστατικές Επιστολές των οντοτήτων-οικονομικών φορέων για λογαριασμό των οποίων υλοποιήθηκαν οι υπόψη συμβάσεις, με τις οποίες θα βεβαιώνεται η καλή εκτέλεσή τους.

Τα στοιχεία που ζητούνται παραπάνω θα εξετασθούν, επαληθευθούν και αξιολογηθούν από την Εταιρεία κατά τη διάρκεια αξιολόγησης των προσφορών. Εάν εκ των στοιχείων αυτών, δεν αποδεικνύεται, κατά την εύλογη κρίση της Εταιρείας, η ελάχιστη απαιτούμενη εμπειρία, η αντίστοιχη προσφορά θα απορριφθεί.

3.2.Β.2 Απαιτήσεις για εξοπλισμό ή/και εγκαταστάσεις

Να διαθέτει εγκαταστάσεις – μηχανουργείο με απαιτούμενο τεχνικό εξοπλισμό για την υλοποίηση του αντικειμένου της σύμβασης και συγκεκριμένα:

3.2.Β.2.1 Εξοπλισμό αποσυναρμολόγησης - συναρμολόγησης περιστρεφόμενων μηχανών που πρέπει να είναι κατ' ελάχιστο

- Μια (1) τουλάχιστον γερανογέφυρα δέκα (10) τόνων κατ' ελάχιστο.
- Υδραυλική διάταξη ή κατάλληλο ροπόκλειδο προέντασης κοχλιών για ροπές έως και 10.000 N.m.
- Επαγωγική συσκευή προθέρμανσης εξαρτημάτων – εξοπλισμού επίτευξη προθερμάνσεων κινητών

ανταλλακτικών για συναρμογές σύσφιξης. Δυνατότητα προθέρμανσης εξαρτημάτων έως διαμέτρου 500mm.

- Εξοπλισμό κατάλληλο για αναγνώριση των κύριων στοιχείων σχεδιασμού και κατασκευής εξαρτημάτων με ακρίβεια 0,01mm όπως εξοπλισμός γεωμετρικής αντιγραφής, λήψη ρεπλικών για έλεγχο θερμικών κατεργασιών, διάταξη χημικής ανάλυσης υλικού κατασκευής. Λογισμικό κατάλληλο για αποτύπωση των παραπάνω μετρήσεων σε κατασκευαστικό σχέδιο.

3.2.Β.2.2 Εξοπλισμό σε επάρκεια για την παράλληλη υποστήριξη κατεργασιών σε εξαρτήματα δύο (2) αντλιών. Ο εξοπλισμός πρέπει να περιλαμβάνει:

- Διάταξη θερμής αναγόμωσης και συγκολλήσεων χαμηλού θερμικού επηρεασμού.
- Δυνατότητα εκτέλεσης επιφανειακών βαρών με εναζώτωση και με παροχή θερμότητας με τόξο laser (laser hardened μέθοδο).
- Μία τουλάχιστον μηχανή κατεργασίας αξόνων διαμέτρου έως και 1200mm.
- Μία τουλάχιστον μηχανή κατεργασίας οπών διαμέτρου έως και 1500 mm βάρους 5.000kg.
- Δύο αυτόματες εργαλειομηχανές κέντρα κατεργασίας 4 αξόνων CNC κατεργασίας διαμέτρου έως 500mm.
- Εξοπλισμό ζυγοστάθμισης για τις πτερωτές των αντλητικών συγκροτημάτων.
- Διάταξη θερμικής αποτατικής ανόπτησης εξαρτημάτων για εξαρτήματα διαμέτρου τουλάχιστο 500mm.
- Έμπειρο πιστοποιημένο τμήμα ποιοτικού ελέγχου κατασκευών του Μηχανουργείου με πιστοποιημένο προσωπικό.

3.2.Β.2.3 Εξοπλισμό κατάλληλο για έλεγχο και αξιολόγηση κατάστασης κινητήρων μέσης τάσης όπως αυτός περιγράφεται στην παράγραφο 2.1.6 της Τεχνικής Περιγραφής της Διαδικασίας.

Για τον έλεγχο και την πιστοποίηση των παραπάνω οι Προσφέροντες θα πρέπει να υποβάλλουν, με την προσφορά τους:

- στοιχεία των μηχανουργείων και εγκαταστάσεών τους με αναλυτική περιγραφή, κατάλογο εξοπλισμού που θα χρησιμοποιηθεί και για ποια εργασία.

3.2.Γ <u>Συστήματα διασφάλισης ποιότητας, πρότυπα περιβαλλοντικής διαχείρισης, υγιεινής και ασφάλειας κ.λπ.</u>

3.2.Γ.1 Πιστοποιήσεις διασφάλισης ποιότητας

Ο Προσφέρων, σε περίπτωση νομικού ή φυσικού προσώπου το ίδιο, ή σε περίπτωση σύμπραξης/ένωσης προσώπων κάθε μέλος, πρέπει να διαθέτει πιστοποιητικό διασφάλισης ποιότητας κατά ISO 9001/ 2015 ή ισοδύναμο ή άλλο αποδεικτικό ότι πληροί ισοδύναμες απαιτήσεις διασφάλισης ποιότητας. Σε περίπτωση επίκλησης της τεχνικής ή επαγγελματικής ικανότητας τρίτου ο παρέχων τη στήριξη, πρέπει να διαθέτει πιστοποιητικό ή αποδεικτικό σύμφωνα με τα παραπάνω αναφερόμενα.

Το βάρος της απόδειξης του «ισοδυνάμου» φέρει ο επικαλούμενος αυτό, ο οποίος υποχρεούται να συμπεριλάβει στην προσφορά του όλα τα σχετικά αποδεικτικά στοιχεία.

3.3 Προσωπική κατάσταση του Προσφέροντος - Μη συνδρομή λόγων αποκλεισμού

Κάθε Προσφέρων αποκλείεται από τη συμμετοχή στη Διαδικασία σύναψης σύμβασης, εφόσον συντρέχει στο πρόσωπό του (εάν πρόκειται για μεμονωμένο φυσικό ή νομικό πρόσωπο) ή σε ένα από τα μέλη του (εάν πρόκειται περί σύμπραξης/ένωσης φυσικών ή νομικών προσώπων) ή στον παρέχοντα στον Προσφέροντα χρηματοοικονομική, τεχνική ή/και επαγγελματική στήριξη, κάποιος ή κάποιοι από τους λόγους που αναφέρονται:

α. στο επισυναπτόμενο στην παρούσα σχετικό υπόδειγμα Δήλωσης περί Μη Συνδρομής Λόγων Αποκλεισμού προς συμπλήρωση και υπογραφή από τους προσφερόμενους

β. στην παρ. 4 του άρθρου 4 του ΚΕΠΥ

Για τον έλεγχο και την πιστοποίηση της μη συνδρομής των υπόψη λόγων αποκλεισμού ισχύουν τα προβλεπόμενα στην παράγραφο 13.2.Β του παρόντος.

Στην περίπτωση που συντρέχει λόγος αποκλεισμού του παρέχοντος χρηματοοικονομική, τεχνική ή/και επαγγελματική στήριξη, κατά την κρίση της Εταιρείας, μπορεί είτε να απορρίπτεται η Προσφορά είτε να ζητείται η αντικατάσταση του Τρίτου.

3.4 Συμμετοχή του ίδιου φυσικού ή νομικού προσώπου σε περισσότερους του ενός Προσφέροντες

Οι προσφορές από μέλος προσφέρουσας σύμπραξης/ένωσης προσώπων που υποβάλει ταυτόχρονα προσφορά και ως μέλος άλλης προσφέρουσας σύμπραξης/ένωσης προσώπων ή υποβάλει και μεμονωμένη προσφορά, αποκλείονται της περαιτέρω συμμετοχής στη Διαδικασία εάν διαπιστωθεί μέχρι και το χρονικό σημείο περάτωσης της Διαδικασίας Επιλογής η εξ αυτής της αιτίας νόθευση του ανταγωνισμού.

Στην περίπτωση που εταιρείες συνδεδεμένες μεταξύ τους υποβάλουν περισσότερες της μιας προσφορές στη Διαδικασία Επιλογής είτε ως μέλη σύμπραξης ανεξάρτητων (μη συνδεδεμένων), μεταξύ τους επιχειρήσεων είτε αυτόνομα, οι προσφορές τους αποκλείονται της περαιτέρω συμμετοχής στη Διαδικασία εάν διαπιστωθεί μέχρι και το χρονικό σημείο περάτωσης της Διαδικασίας επιλογής η εξ αυτής της αιτίας νόθευση του ανταγωνισμού.

3.5 Στήριξη στις ικανότητες άλλων οντοτήτων

Εφόσον οι Προσφέροντες θα ήθελαν να επικαλεσθούν τη χρηματοοικονομική, τεχνική ή/και επαγγελματική ικανότητα Τρίτων προκειμένου να καλύψουν τις προϋποθέσεις συμμετοχής που καθορίζονται στις παραπάνω αντίστοιχες παραγράφους, υποχρεούνται να υποβάλουν τα στοιχεία που αποδεικνύουν την ανωτέρω ικανότητα και να δηλώσουν ότι δεσμεύονται να παράσχουν όλες τις απαιτούμενες από την παρούσα Πρόσκληση εγγυήσεις.
Ειδικότερα στην περίπτωση αυτή, ο Προσφέρων έχει την υποχρέωση να αποδείξει με κάθε πρόσφορο τρόπο ότι θα έχει στη διάθεσή του, καθ' όλη τη διάρκεια της σύμβασης, όλα τα απαραίτητα μέσα για την εκτέλεσή της που προέρχονται από τον Τρίτο και ότι διαθέτει με τον Τρίτο κατάλληλη προς τούτο νομική σχέση, σε βαθμό που να ικανοποιεί την Εταιρεία. Τα εν λόγω αποδεικτικά μέσα μπορεί να είναι, ενδεικτικά, έγκυρο ιδιωτικό συμφωνητικό μεταξύ του προσφέροντος και του επικαλούμενου Τρίτου ή παρουσίαση εγγυήσεων άλλης μορφής, προκειμένου η ανωτέρω απαιτούμενη ικανότητα να

αποδεικνύεται επαρκώς και κατά τρόπο ικανοποιητικό για τη ΔΕΗ. Τα εν λόγω αποδεικτικά μέσα θα πρέπει να συμπεριληφθούν στον Φάκελο Β της προσφοράς.
Το αντικείμενο της συνεργασίας μεταξύ του προσφέροντος και του Τρίτου, καθώς και οι παρασχεθείσες εγγυήσεις από τον Τρίτο προς τον Προσφέροντα θα συμπεριληφθούν, εφόσον αυτός επιλεγεί Αντισυμβαλλόμενος στη σύμβαση.
Στις ως άνω περιπτώσεις οι παρέχοντες τη στήριξη Τρίτοι πρέπει να πληρούν τα αντίστοιχα κριτήρια επιλογής και μη συνδρομής λόγων αποκλεισμού με τον Προσφέροντα στον οποίο παρέχουν τη στήριξη. Προς τούτο στις προσφορές πρέπει να συμπεριλαμβάνονται, συμπληρωμένα και υπογεγραμμένα από εκπρόσωπο του παρέχοντος τη στήριξη Τρίτου, τα ακόλουθα:

- Στο Φάκελο Α:
  - Δήλωση νομιμοποίησης του παρέχοντος τη στήριξη σύμφωνα με το επισυναπτόμενο στην Πρόσκληση σχετικό υπόδειγμα
  - Η Δήλωση περί Μη Συνδρομής Λόγων Αποκλεισμού (ΔΜΣΛΑ)
- Στο Φάκελο Β:
  - Τα δικαιολογητικά των παραγράφων 13.3.1 έως 13.3.3 του παρόντος τεύχους ανάλογα με το είδος της επικαλούμενης στήριξης.

Επιπλέον, στην περίπτωση που η παρεχόμενη στήριξη αφορά στην πλήρωση των κριτηρίων που σχετίζονται με τη διάθεση σχετικής επαγγελματικής εμπειρίας επιτυχούς παροχής αντίστοιχων υπηρεσιών, οι παρέχοντες τη στήριξη θα εκτελέσουν το αντικείμενο της σύμβασης για το οποίο παρέχουν τις συγκεκριμένες ικανότητες.
Αποσαφηνίζεται ότι εάν ο Προσφέρων επικαλείται την ικανότητα υπεργολάβων του για την πλήρωση κριτηρίων επιλογής, οι υπεργολάβοι αυτοί θεωρούνται Τρίτοι και ισχύουν τα παραπάνω.

Άρθρο 4
Εναλλακτικές Προσφορές - Αποκλίσεις – Ισοδύναμες Τεχνικά Λύσεις

4.1 Εναλλακτικές προσφορές
Εναλλακτικές προσφορές δεν γίνονται δεκτές

4.2 Εμπορικές Αποκλίσεις
Δεν επιτρέπονται αποκλίσεις από τους Εμπορικούς και Οικονομικούς Όρους της Πρόσκλησης και οι προσφορές θα πρέπει να συμμορφώνονται πλήρως προς τους αντίστοιχους όρους και τις απαιτήσεις της.

4.3 Τεχνικές Αποκλίσεις
Δεν επιτρέπονται τεχνικές αποκλίσεις από τις τεχνικές προδιαγραφές της Πρόσκλησης

Άρθρο 5
Τύπος σύμπραξης/ένωσης φυσικών ή/και νομικών προσώπων

Στην περίπτωση που Προτιμητέος Προσφέρων είναι σύμπραξη/ένωση φυσικών ή/και νομικών προσώπων, θα επιλεχθούν ως Αντισυμβαλλόμενα μέρη όλα τα μέλη και θα τεθεί διάταξη στο συμφωνητικό της σύμβασης σύμφωνα με την οποία τα μέλη της σύμπραξης/ένωσης ενέχονται και ευθύνονται έναντι της ΔΕΗ ενιαία, αδιαίρετα, αλληλέγγυα και σε ολόκληρο το καθένα χωριστά, θα εκπροσωπούνται από κοινό εκπρόσωπο και θα ελέγχεται από τη ΔΕΗ η ουσιαστική συμμετοχή στη σύμπραξη/ένωση όλων των μελών της σε όλη τη διάρκεια ισχύος της σύμβασης.

Στην περίπτωση που η προσφέρουσα σύμπραξη/ένωση (άτυπη σύμπραξη/ένωση προσώπων χωρίς φορολογική και νομική υπόσταση) η προσφορά πρέπει να είναι διαμορφωμένη κατά τρόπο, ώστε να εξασφαλίζεται η χωριστή τιμολόγηση από τα μέλη του ομίλου σύμφωνα με την Ελληνική φορολογική νομοθεσία και πρακτική.

Στην αντίθετη περίπτωση η επιλεγείσα σύμπραξη/ένωση υποχρεούται πριν την υπογραφή της σύμβασης να περιβληθεί νομικό/ φορολογικό τύπο που θα επιτρέπει την από κοινού τιμολόγηση και τότε για την υπογραφή της σύμβασης απαιτείται, επιπλέον, η κατάθεση επικυρωμένου αντιγράφου του εγγράφου που θα αποδεικνύει ότι ικανοποιείται η προαναφερθείσα απαίτηση.

Άρθρο 6
Χρηματοδότηση Αντικειμένου Σύμβασης

Από τον Προϋπολογισμό της ΔΕΗ Α.Ε.

Άρθρο 7
Παραλαβή στοιχείων Διαδικασίας

7.1 Τα τεύχη της Πρόσκλησης, όπως αυτά αναφέρονται στην παράγραφο 8.1 του παρόντος τεύχους, διατίθενται ηλεκτρονικά, μέσω της επίσημης ιστοσελίδας (site) της Εταιρείας: https://eprocurement.dei.gr – **ΔΠΛΠ 1668** όπου και θα παραμείνουν ανηρτημένα μέχρι και πριν από τη λήξη της προθεσμίας υποβολής των προσφορών.

7.2 Οι ενδιαφερόμενοι, οι οποίοι έχουν εγγραφεί στο Σύστημα ως παραλήπτες της Πρόσκλησης, μπορούν να ζητούν διευκρινίσεις σχετικά με το περιεχόμενο των τευχών της παρούσας Πρόσκλησης, το αργότερο μέχρι και πέντε (5) ημέρες πριν από την καταληκτική ημερομηνία ηλεκτρονικής υποβολής των προσφορών.
Αιτήματα παροχής πληροφοριών ή διευκρινίσεων ή πραγματοποίησης επιτόπιας επίσκεψης που υποβάλλονται εκτός των ανωτέρω προθεσμιών δεν εξετάζονται.

7.3 Τα σχετικά αιτήματα παροχής διευκρινίσεων υποβάλλονται ηλεκτρονικά από εγγεγραμμένους στο Σύστημα ενδιαφερόμενους και μέσω αυτού, δηλαδή από τους διαθέτοντες σχετικά διαπιστευτήρια που τους έχουν χορηγηθεί (όνομα χρήστη και κωδικός πρόσβασης). Το ηλεκτρονικό αρχείο με το κείμενο των ερωτημάτων είναι απαραίτητα ψηφιακά υπογεγραμμένο.

7.4 Το αργότερο μέχρι και τρεις (3) ημέρες πριν από την καταληκτική ημερομηνία ηλεκτρονικής υποβολής των προσφορών, η ΔΕΗ θα παράσχει, μέσω της ηλεκτρονικής πλατφόρμας του Συστήματος, τις απαραίτητες διευκρινίσεις και τυχόν συμπληρωματικά στοιχεία σχετικά με τις προδιαγραφές και τους όρους της Διαδικασίας και του σχεδίου σύμβασης.
Η ΔΕΗ δεν θα απαντήσει σε ερωτήματα που θα έχουν υποβληθεί με ηλεκτρονικό ταχυδρομείο ή με υποβολή ερωτημάτων στο πρωτόκολλο της Διεύθυνσης της Εταιρείας και εκτός πλατφόρμας Συστήματος.

Κανένας Προσφέρων δεν μπορεί σε οποιαδήποτε περίπτωση να επικαλεστεί προφορικές ή τηλεφωνικές απαντήσεις εκ μέρους της ΔΕΗ.

Άρθρο 8
Τεύχη και έγγραφα της Πρόσκλησης

8.1 Η παρούσα Πρόσκληση, αποτελείται από το σύνολο των παρακάτω τευχών:

1. Όροι και Οδηγίες προς τους Προσφέροντες μετά των ακόλουθων Παραρτημάτων:
   - Παράρτημα Ι: Έντυπα οικονομικής Προσφοράς στα οποία συμπεριλαμβάνονται:

α. Τιμολόγιο Προσφοράς (για συμπλήρωση)
β. Προμέτρηση-Προϋπολογισμός Προσφοράς (για συμπλήρωση)

- Παράρτημα ΙΙ: Πίνακας Κατανομής Τιμήματος (*Σε περίπτωση σύμπραξης/ένωσης*)
- Παράρτημα ΙΙΙ: Πίνακες Εμπειρίας και Συστάσεων

2. Συμφωνητικό Σύμβασης (Σχέδιο)
3. Ειδικοί Όροι Σύμβασης (Σχέδιο)
4. Τεχνική Περιγραφή με συνημμένα
5. Γενικοί Όροι Σύμβασης
6. Ασφαλίσεις
7. Υποδείγματα, που περιλαμβάνουν
   α. Δηλώσεις νομιμοποίησης:
      α1. προσφέροντος και
      α2. τυχόν παρέχοντος στήριξη
   β. Δήλωση αποδοχής όρων Πρόσκλησης και χρόνου ισχύος προσφοράς
   γ. Δήλωση περί μη Συνδρομής Λόγων Αποκλεισμού (ΔΜΣΛΑ)
   δ. Δήλωση συνυπευθυνότητας για Συμπράξεις / Ενώσεις
   ε. Εγγυητική Επιστολή Συμμετοχής στη Διαδικασία
   στ. Εγγυητική Επιστολή Καλής Εκτέλεσης

8.2 Η σειρά με την οποία αναφέρονται τα παραπάνω τεύχη καθορίζει τη σειρά ισχύος των όρων καθενός από αυτά, σε περίπτωση που διαπιστωθούν διαφορές στο κείμενο ή στην ερμηνεία των όρων δύο ή περισσοτέρων τευχών. Το ίδιο ισχύει και για τη σειρά ισχύος μεταξύ των τευχών και των παραρτημάτων/προσαρτημάτων τους.

Άρθρο 9
Σύστημα προσφοράς

9.1 Η Διαδικασία διενεργείται με το Σύστημα Προσφοράς με ελεύθερη συμπλήρωση ανοικτού Τιμολογίου.

Οι Προσφέροντες προσφέρουν τιμές συμπληρώνοντας, τα ασυμπλήρωτα «Τιμολόγιο Προσφοράς» και «Προμέτρηση – Προϋπολογισμός Προσφοράς», με τις προσφερόμενες από αυτούς τιμές.

Το «Τιμολόγιο Προσφοράς» αποτελεί το κύριο έγγραφο της προσφοράς του Προσφέροντος και όλες οι τιμές μονάδας που προσφέρονται με αυτό πρέπει να συμπληρωθούν ολογράφως και αριθμητικώς. Αν υπάρχει ασυμφωνία μεταξύ της ολόγραφης και αριθμητικής τιμής, υπερισχύει η ολόγραφη. Η μη συμπλήρωση έστω και μιας τιμής μονάδας καθιστά την προσφορά απαράδεκτη.

Οι τιμές μονάδας που προσφέρει καθένας Προσφέρων στο «Τιμολόγιο Προσφοράς» περιλαμβάνουν οπωσδήποτε και τα γενικά έξοδα, το όφελος και λοιπές επιβαρύνσεις του Προσφέροντος, όπως αυτές περιγράφονται στα άρθρα 17 και 19 των Γενικών Όρων της Σύμβασης.

Το τεύχος «Προμέτρηση – Προϋπολογισμός Προσφοράς», αποτελεί συμπληρωματικό έγγραφο της προσφοράς και πρέπει να συμπληρωθούν από τον Προσφέροντα όλα τα κονδύλια αυτού. Σε περίπτωση που κάποιες τιμές του τεύχους «Προμέτρηση – Προϋπολογισμός Προσφοράς» είναι διαφορετικές από εκείνες που έχουν αναγραφεί στο τεύχος «Τιμολόγιο Προσφοράς» για τις ίδιες εργασίες, ή σε περίπτωση λογιστικών σφαλμάτων στο Τεύχος «Προμέτρηση – Προϋπολογισμός Προσφοράς», οι σχετικές εγγραφές θα διορθώνονται από την Επιτροπή Αξιολόγησης, βάσει του τεύχους «Τιμολόγιο Προσφοράς» και η προσφορά θα ισχύει όπως θα διαμορφωθεί μετά τις παραπάνω

διορθώσεις της Επιτροπής Αξιολόγησης. Στην περίπτωση αυτή, όπου εφεξής γίνεται παραπομπή στην προσφορά, ή σε επιμέρους στοιχεία της, θα νοείται η παραπομπή στη διορθωμένη προσφορά.

Στο τεύχος «Προμέτρηση – Προϋπολογισμός Προσφοράς», θα συμπληρώνονται τα ακόλουθα:

α. Οι τιμές μονάδας όπως προσφέρονται με το «Τιμολόγιο Προσφοράς».
β. Το αποτέλεσμα του πολλαπλασιασμού των ποσοτήτων επί τις τιμές, που διαμορφώνει την δαπάνη για κάθε εργασία (κονδύλιο) χωριστά.
γ. Τα επιμέρους αθροίσματα των δαπανών, καθώς και το γενικό άθροισμα του συνόλου των δαπανών το οποίο θα αποτελεί τη συνολική δαπάνη του Έργου που προβλέπεται με την προσφορά.

Απαγορεύεται κάθε διόρθωση, διαγραφή ή προσθήκη στις τιμές που έχουν ήδη συμπληρωθεί στο τεύχος «Τιμολόγιο Προσφοράς» ή στα ποσά του τεύχους «Προμέτρηση – Προϋπολογισμός Προσφοράς».

9.2 Οι Προσφέροντες υποχρεούνται να συμπληρώσουν, επί ποινή απόρριψης, τις τιμές ή και τα τιμήματα της οικονομικής προσφοράς τους στη σχετική φόρμα του Συστήματος. Επίσης υποχρεούνται, επί ποινή απόρριψης, να υποβάλουν την οικονομική τους προσφορά και σε ψηφιακά υπογεγραμμένη έντυπη μορφή αρχείου portable document format (pdf) σύμφωνα με το επισυναπτόμενο στο παρόν τεύχος σχετικό έντυπο και με τις οδηγίες του εγχειριδίου χρήσης του Συστήματος.

9.3 Οι Προσφέροντες υποχρεούνται να προσφέρουν τιμές/τίμημα αποκλειστικά σε ΕΥΡΩ. Σε περίπτωση μη συμμόρφωσης του Προσφέροντος με την απαίτηση αυτή, η προσφορά του θα απορριφθεί. Με ποινή την ακυρότητα των αντίστοιχων προσφορών, αποκλείεται η κατά οποιοδήποτε τρόπο εξάρτηση των προσφερομένων τιμών από την ισοτιμία του νομίσματος της προσφοράς με οποιοδήποτε άλλο νόμισμα.

9.4 Όλα τα ποσά της οικονομικής προσφοράς πρέπει να αναγράφονται αριθμητικώς και ολογράφως στις κατάλληλες θέσεις.
Σε περίπτωση όμως διαφορών μεταξύ τους, θα υπερισχύουν οι ολόγραφες τιμές.

9.5 Οι πιο πάνω τιμές των προσφορών είναι σταθερές και δεν θα υπόκεινται σε οποιαδήποτε αναπροσαρμογή καθ' όλη τη διάρκεια ισχύος της προσφοράς και της σύμβασης. Προσφορές οι οποίες περιλαμβάνουν τιμές με αναπροσαρμογή θα απορρίπτονται

9.6 Τα χορηγούμενα έντυπα οικονομικής προσφοράς με την παρούσα Πρόσκληση είναι τα εξής:
- Τιμολόγιο προσφοράς (για συμπλήρωση) (Παράρτημα Ι)
- Προμέτρηση – Προϋπολογισμός προσφοράς (για συμπλήρωση)(Παράρτημα Ι)
- Πίνακας κατανομής τιμήματος (σε περίπτωση σύμπραξης) (Παράρτημα ΙΙ)

Άρθρο 10
Χρόνος Ισχύος Προσφοράς

10.1 Οι Προσφέροντες δεσμεύονται με την προσφορά τους για χρονικό διάστημα **εκατό είκοσι (120)** ημερών. Η προθεσμία ισχύος άρχεται από την επομένη της καταληκτικής ημερομηνίας υποβολής των προσφορών. Επίσης δεσμεύονται ότι η προσφορά τους είναι οριστική, μη δυνάμενη κατά τη διάρκεια της αρχικής ισχύος της ή όπως αυτή θα παραταθεί σύμφωνα με τα παρακάτω, να αποσυρθεί ή να τροποποιηθεί, καθώς και ότι

δεν μπορούν να απαιτήσουν οποιαδήποτε αναπροσαρμογή των τιμών της μετά την τυχόν επιλογή τους ως Αντισυμβαλλόμενων.
Οι Προσφέροντες αποδέχονται με τη συμμετοχή τους στη Διαδικασία την παράταση της ισχύος της προσφοράς τους κατά διαδοχικά διαστήματα τριάντα (30) ημερών ή, κατόπιν αιτήματος της ΔΕΗ και συναίνεσης του Προσφέροντος, κατά μεγαλύτερα χρονικά διαστήματα από την εκάστοτε ημερομηνία λήξης της ισχύος της και μέχρι την ολοκλήρωση της διαδικασίας σύμφωνα με το άρθρο 17 του παρόντος τεύχους, εκτός εάν προ της εκάστοτε κατά τα ως άνω λήξης αυτής, ο Προσφέρων δηλώσει το αντίθετο και δεν την παρατείνει. Αποσαφηνίζεται ότι, μη αποδοχή της παράτασης της ισχύος είναι αποδεκτή μόνο μετά τη συμπλήρωση του εκάστοτε χρονικού διαστήματος ισχύος της προσφοράς, όπως αυτό έχει διαμορφωθεί βάσει των ανωτέρω, και εφόσον ο Προσφέρων γνωστοποιήσει στην Εταιρεία με υπογεγραμμένη ψηφιακά επιστολή μέσω του Συστήματος πριν από την αντίστοιχη λήξη, τη μη ανανέωση της ισχύος της.

Για παράταση της ισχύος της προσφοράς πέραν των έντεκα (11) μηνών από την καταληκτική ημερομηνία υποβολής των προσφορών, απαιτείται η προηγούμενη έγγραφη συναίνεση του Προσφέροντα και του εκδότη της Εγγυητικής Επιστολής Συμμετοχής (ΕΕΣ). Επίσης, οι Προσφέροντες αποδέχονται με τη συμμετοχή τους στη Διαδικασία ότι η προσφορά τους παραμένει σε ισχύ, μετά τη γνωστοποίηση της απόφασης επιλογής Αντισυμβαλλομένου, για όσο χρονικό διάστημα καθυστερεί η υπογραφή της σύμβασης με υπαιτιότητα του Προτιμητέου Προσφέροντος. Η ΔΕΗ μετά την παρέλευση της προθεσμίας υπογραφής της σύμβασης δύναται να προβεί στην κατάπτωση της ΕΕΣ του Προτιμητέου Προσφέροντος.

10.2 Σε περίπτωση παράτασης της καταληκτικής προθεσμίας ηλεκτρονικής υποβολής των προσφορών, οι Προσφέροντες δύνανται να τροποποιήσουν ή/και συμπληρώσουν τυχόν υποβληθείσα στο Σύστημα προσφορά τους ή να την αποσύρουν και υποβάλουν, εφόσον το επιθυμούν, νέα προσφορά μέχρι τη νέα καταληκτική ημερομηνία υποβολής προσφορών, μεριμνώντας σε κάθε περίπτωση τα συμπεριλαμβανόμενα στην προσφορά τους στοιχεία και δικαιολογητικά να είναι σε ισχύ κατά τη νέα ως άνω ημερομηνία.

Άρθρο 11
Εγγύηση Συμμετοχής

11.1 Για τη συμμετοχή στη Διαδικασία πρέπει να υποβληθεί από κάθε Προσφέροντα σε μορφή αρχείου pdf εγγύηση συμμετοχής υπό μορφή Εγγυητικής Επιστολής Συμμετοχής (ΕΕΣ), σύμφωνα με το επισυναπτόμενο υπόδειγμα της Εταιρείας, η οποία να έχει εκδοθεί από πιστωτικά ή χρηματοδοτικά ιδρύματα ή ασφαλιστικές επιχειρήσεις κατά την έννοια των περιπτώσεων β και γ της παρ. 1 του άρθρου 14 του ν. 4364/2016, της αποδοχής της ΔΕΗ, την οποία η Εταιρεία δεν μπορεί να αρνηθεί αδικαιολόγητα, που λειτουργούν νόμιμα σε:

α. ένα κράτος – μέλος της Ευρωπαϊκής Ένωσης (Ε.Ε.), ή
β. ένα κράτος – μέλος του Ευρωπαϊκού Οικονομικού Χώρου (Ε.Ο.Χ.) ή
γ. τρίτες χώρες που έχουν υπογράψει και κυρώσει τη Συμφωνία περί Δημοσίων Συμβάσεων - ΣΔΣ (Government Procurement Agreement - GPA) του Παγκόσμιου Οργανισμού Εμπορίου (Π.Ο.Ε)

και έχουν σύμφωνα με τις ισχύουσες διατάξεις, αυτό το δικαίωμα.

Μπορεί επίσης να εκδίδονται από το Ταμείο Μηχανικών Εργοληπτών Δημοσίων Έργων (Τ.Μ.Ε.Δ.Ε.) ή να παρέχονται με γραμμάτιο του Ταμείου Παρακαταθηκών και Δανείων με παρακατάθεση σε αυτό του αντίστοιχου χρηματικού ποσού. Όταν παρέχονται με γραμμάτιο του Ταμείου Παρακαταθηκών και Δανείων δεν τυγχάνει εφαρμογής ο όρος : η εγγύηση παρέχεται ανέκκλητα και ανεπιφύλακτα, ο δε εκδότης παραιτείται του δικαιώματος της διαιρέσεως και της διζήσεως.

Τυχόν αποκλίσεις από τα επισυναπτόμενα υποδείγματα Εγγυητικών Επιστολών της Εταιρείας αξιολογούνται από το αρμόδιο όργανο της Διαδικασίας Επιλογής, πριν την απόρριψη των προσφορών.

Οι Προσφέροντες υποχρεούνται να προσκομίσουν, επί ποινή απόρριψης της προσφοράς, και σε έντυπη μορφή (πρωτότυπο) τις ως άνω ΕΕΣ στην αρμόδια Διεύθυνση της Εταιρείας διεξαγωγής της Διαδικασίας Επιλογής εντός τριών (3) ημερών από την καταληκτική ημερομηνία ηλεκτρονικής υποβολής των προσφορών.

11.2 Η αξία της ως άνω ΕΕΣ θα ανέρχεται στο ποσό των **6.600,00 €**

Οι Προσφέροντες δύνανται να καταθέσουν περισσότερες από μια ΕΕΣ προκειμένου να καλύπτουν αθροιστικά το σύνολο της αξίας που ζητείται με την Πρόσκληση. Σε περίπτωση που ο Προσφέρων είναι σύμπραξη/ένωση φυσικών ή/και νομικών προσώπων η/οι ΕΕΣ μπορεί να εκδίδεται/ονται υπέρ της σύμπραξης/ένωσης ή και υπέρ ενός μέλους αυτής.

11.3 Η παραπάνω εγγύηση θα ισχύει τουλάχιστον κατά τριάντα (30) ημέρες περισσότερο από την ισχύ της προσφοράς, όπως αυτή διαμορφώνεται βάσει της παραπάνω παραγράφου 10.1, και θα επιστρέφεται μετά την υπογραφή της σύμβασης σε όλους τους Προσφέροντες, πλην αυτού ο οποίος έχει επιλεγεί Αντισυμβαλλόμενος, του οποίου η Εγγύηση Συμμετοχής στη Διαδικασία θα του αποδοθεί, μετά την κατάθεση της Εγγύησης Καλής Εκτέλεσης του αντικειμένου, κατά την υπογραφή της σύμβασης. Σε περίπτωση παράτασης της ισχύος της προσφοράς πέραν των έντεκα (11) μηνών από την καταληκτική ημερομηνία υποβολής των προσφορών, για αντίστοιχη παράταση της ισχύος της ΕΕΣ απαιτείται προηγούμενη έγγραφη δήλωση παράτασης ισχύος της από τον εκδότη αυτής.

11.4 Η εν λόγω Εγγυητική Επιστολή, εφόσον δεν θα υπάρξει λόγος να καταπέσει υπέρ της ΔΕΗ, σύμφωνα με τους όρους της Πρόσκλησης θα επιστρέφεται πέραν της περίπτωσης των άρθρων 11.3 και 11.5 και αν:

α. ο Προσφέρων επιλέξει να αποσυρθεί από τη Διαδικασία Επιλογής ώστε να αποφύγει τη δημοσιοποίηση στοιχείων που έχει δηλώσει ως εμπιστευτικά σύμφωνα με τα οριζόμενα στην παρ. 13.1.1.3 του παρόντος τεύχους.
β. μετά τη λήξη ισχύος της προσφοράς του, ο Προσφέρων δεν παρατείνει την ισχύ της.
γ. η Διαδικασία Επιλογής ματαιωθεί

11.5 Ειδικά, μετά την αποσφράγιση των οικονομικών προσφορών και την κατάταξή τους βάση των κριτηρίων επιλογής, η ΕΕΣ δύναται να επιστραφεί σε κάθε Προσφέροντα, που με αίτησή του ζητά την επιστροφή της πριν τη συμπλήρωση του χρόνου ισχύος της, εφόσον δεν πιθανολογείται ότι, μετά από ενδεχόμενη ανατροπή του αποτελέσματος της Διαδικασίας, θα επιλεγεί ως Αντισυμβαλλόμενος.

11.6 Η εν λόγω ΕΕΣ καταπίπτει στο σύνολό της υπέρ της ΔΕΗ στις ακόλουθες περιπτώσεις:

- μη συμμόρφωσης καθ' οιονδήποτε τρόπο του προσφέροντος ως προς τις υποχρεώσεις του όπως αυτές απορρέουν από τη διαδικασία,
- γνωστοποίησης προϋποθέσεων, οι οποίες δεν περιλαμβάνονταν στην αρχική προσφορά, για διατήρησή της σε ισχύ μέχρι τη λήξη της εκάστοτε αποδεχθείσας προθεσμίας ισχύος της, σύμφωνα με την παράγραφο 17.1 του παρόντος τεύχους,
- αποχώρησης του Προσφέροντος νωρίτερα από τη λήξη ισχύος της προσφοράς του
- μη υποβολής των αποδεικτικών νομιμοποίησης και μη συνδρομής λόγων αποκλεισμού ή/και υποβολής ψευδών δικαιολογητικών.
- άρνησης υπογραφής της σύμβασης από το Προτιμητέο Προσφέροντα.

Σημειώνεται ότι η ΕΕΣ δεν καταπίπτει εάν ο Προσφέρων, γνωστοποιήσει ότι η ισχύς της προσφοράς του δεν ανανεώνεται, σύμφωνα με την παράγραφο 10.1 του παρόντος τεύχους.

Άρθρο 12
Υποβαλλόμενα Στοιχεία

12.1 Όλα τα έγγραφα που θα υποβληθούν από τους Προσφέροντες στη Διαδικασία Επιλογής θα είναι συνταγμένα στην Ελληνική γλώσσα.

Ειδικότερα, τα έγγραφα που σχετίζονται με τα περιεχόμενα του Φακέλου Α των προσφορών και θα υποβληθούν από Αλλοδαπές Επιχειρήσεις μπορούν να είναι συνταγμένα στη γλώσσα της Χώρας έκδοσης και να συνοδεύονται από επίσημη μετάφραση στην Ελληνική γλώσσα, αρμοδίως επικυρωμένη.
Το σύνολο των εγγράφων των φακέλων Β και Γ μπορεί να είναι συνταγμένα στην αγγλική γλώσσα.

12.2 Αντιπροσφορές δεν γίνονται δεκτές σε καμία περίπτωση.

12.3 Προσθήκες, τροποποιήσεις ή επιφυλάξεις των Προσφερόντων επί των όρων που περιλαμβάνονται στα τεύχη της Πρόσκλησης δεν γίνονται δεκτές και τυχόν προσφορές οι οποίες θα περιλαμβάνουν τέτοιες διαφοροποιήσεις θα αποκλείονται από τη Διαδικασία.

Άρθρο 13
Κατάρτιση - Περιεχόμενο προσφοράς

13.1 Απαιτήσεις για το περιεχόμενο της προσφοράς

13.1.1 Γενικές απαιτήσεις

13.1.1.1 Κατάρτιση προσφοράς – Ηλεκτρονικοί Φάκελοι- Περιεχόμενα

Οι προσφορές πρέπει να περιλαμβάνουν σε ηλεκτρονική μορφή όλα τα στοιχεία που καθορίζονται στην Πρόσκληση και να υποβάλλονται ηλεκτρονικά στο Σύστημα, σύμφωνα με τους όρους της παρούσας Πρόσκλησης και τις Οδηγίες Χρήσης του Συστήματος. Ειδικότερα:

Οι προσφορές υποβάλλονται ηλεκτρονικά, σε φακέλους και με συμπλήρωση της οικονομικής προσφοράς σε ειδική ηλεκτρονική φόρμα του Συστήματος, σύμφωνα με τις παρακάτω παραγράφους 13.2 έως 13.4.

Στην περίπτωση που τα αρχεία που εμπεριέχονται σε κάθε φάκελο περιλαμβάνουν περισσότερα του ενός έγγραφα ή ενότητες, απαιτείται να υπάρχει και ο αντίστοιχος πίνακας περιεχομένων.

Επισημαίνεται ότι ο κάθε ηλεκτρονικός φάκελος θα πρέπει να περιέχει όσα στοιχεία αναφέρονται στις αντίστοιχες παραγράφους 13.2, 13.3 και 13.4 του παρόντος άρθρου που υποχρεούνται να υποβάλουν οι Προσφέροντες.

13.1.1.2 Υπογραφή προσφοράς

Η προσφορά θα πρέπει να υπογράφεται ψηφιακά στην πρώτη ή τελευταία σελίδα κάθε υποβαλλομένου εγγράφου (δηλώσεις, περιγραφή προσφερομένου αντικειμένου, σχέδια κλπ.), σύμφωνα με την παρακάτω παράγραφο, από πρόσωπο ή πρόσωπα τα οποία είναι προς τούτο εξουσιοδοτημένα από τον Προσφέροντα σύμφωνα με τα οριζόμενα κατωτέρω (παράγραφος 13.2.2).

Τα ανωτέρω στοιχεία και δικαιολογητικά της τεχνικής προσφοράς του προσφέροντος υποβάλλονται από αυτόν ηλεκτρονικά σε μορφή αρχείου τύπου .pdf. Όταν υπογράφονται από τον ίδιο φέρουν ψηφιακή υπογραφή

και δεν απαιτείται να φέρουν σχετική θεώρηση γνησίου υπογραφής. Ο Προσφέρων υποχρεούται, εφόσον ζητηθεί από τη ΔΕΗ, να προσκομίσει τις δηλώσεις και τα δικαιολογητικά που υπογράφονται από τρίτους και συνιστούν ιδιωτικά έγγραφα, σε έντυπη μορφή (είτε πρωτότυπα είτε αντίγραφα επικυρωμένα αρμοδίως) εντός τριών (3) εργάσιμων ημερών από τη ζήτησή τους.

Η σύμπραξη/ένωση Προσφερόντων υποβάλλει κοινή προσφορά, η οποία υπογράφεται ψηφιακά υποχρεωτικά, είτε από εξουσιοδοτημένα πρόσωπο ή πρόσωπα, είτε από κοινό εκπρόσωπό της νομίμως εξουσιοδοτημένο προς τούτο.

13.1.1.3 Εχεμύθεια – εμπιστευτικές πληροφορίες

Εάν οι Προσφέροντες περιλαμβάνουν στις Προσφορές τους στοιχεία που ευλόγως μπορούν να χαρακτηριστούν ως εμπιστευτικά, τα σημαίνουν ευκρινώς ως τέτοια ώστε να μη δημοσιοποιηθούν σε τρίτους. Εμπιστευτικά μπορούν να χαρακτηριστούν ιδίως στοιχεία που αφορούν τεχνολογικά ή εμπορικά μυστικά ή στοιχεία διανοητικής ιδιοκτησίας. Ο Προσφέρων έχει υποχρέωση με χωριστό έγγραφο να θεμελιώνει το εύλογο του αιτήματός του να μη δημοσιοποιηθούν τα έγγραφα αυτά σε τρίτους. Σε κάθε περίπτωση δεν μπορούν να σημανθούν ως εμπιστευτικά στοιχεία τιμές μονάδας, προσφερόμενες ποσότητες, στοιχεία της τεχνικής προσφοράς που χρησιμοποιούνται για την αξιολόγησή της και η οικονομική προσφορά. Η κρίση περί του εάν τα έγγραφα θα δημοσιοποιηθούν ή όχι στους λοιπούς Προσφέροντες στα πλαίσια της Διαδικασίας Επιλογής ανήκει στην Επιτροπή που διενεργεί τη Διαδικασία, η οποία λαμβάνει ιδίως υπόψη της τη νομική θεμελίωση της εμπιστευτικότητας που παρέχει ο ενδιαφερόμενος Προσφέρων και τις τυχόν Αντιρρήσεις που έχουν προβληθεί από άλλους Προσφέροντες στη Διαδικασία. Εάν η Επιτροπή κρίνει ότι τα στοιχεία πρέπει να δημοσιοποιηθούν ενημερώνει τον Προσφέροντα, ο οποίος δύναται είτε να συναινέσει στη δημοσιοποίηση είτε να αποσυρθεί από τη Διαδικασία Επιλογής ώστε να αποφύγει τη δημοσιοποίηση.
Στην περίπτωση που κριθεί ότι τα στοιχεία αυτά δεν πρέπει να δημοσιοποιηθούν Τα υπόψη στοιχεία θα είναι προσβάσιμα μόνον από τις αρμόδιες Επιτροπές και Διευθύνσεις της ΔΕΗ.

13.1.1.4 Ισχύς Δηλώσεων και δικαιολογητικών

Ισχύς Δηλώσεων

Όλες οι απαιτούμενες από την Πρόσκληση Δηλώσεις των Προσφερόντων, οι οποίες υποβάλλονται σε υποκατάσταση δημοσίων ή ιδιωτικών εγγράφων, καθώς και οι λοιπές Δηλώσεις, είτε συμμόρφωσης με τους όρους της Πρόσκλησης είτε τρίτων για συνεργασία με τον Προσφέροντα θα καλύπτουν το χρονικό διάστημα μέχρι την ημερομηνία αποσφράγισης των προσφορών. Οι παραπάνω Δηλώσεις μπορεί να υπογράφονται έως δέκα (10) ημέρες πριν την καταληκτική ημερομηνία υποβολής των προσφορών.

Ισχύς δικαιολογητικών

α) τα δικαιολογητικά που αφορούν στην περίπτωση ΙΙ και στις περιπτώσεις IV α και β της κατωτέρω παραγράφου 13.2Β εφόσον έχουν εκδοθεί έως τρεις (3) μήνες πριν από την υποβολή τους,
β) τα λοιπά δικαιολογητικά που αφορούν την περίπτωση ΙΙΙ της κατωτέρω παραγράφου 13.2Β εφόσον είναι σε ισχύ κατά το χρόνο υποβολής τους, άλλως, στην περίπτωση που δεν αναφέρεται χρόνος ισχύος, να έχουν εκδοθεί κατά τα οριζόμενα στην προηγούμενη περίπτωση,

γ) τα δικαιολογητικά που αφορούν την περίπτωση Ι της κατωτέρω παραγράφου 13.2Β, τα αποδεικτικά ισχύουσας εκπροσώπησης σε περίπτωση νομικών προσώπων, εφόσον έχουν εκδοθεί έως τριάντα (30) εργάσιμες ημέρες πριν από την υποβολή τους, και
δ) οι δηλώσεις, εφόσον έχουν συνταχθεί μετά την κοινοποίηση της πρόσκλησης για την υποβολή των δικαιολογητικών.

13.1.1.5 Μη προσκόμιση στοιχείων και δικαιολογητικών – ψευδείς δηλώσεις ή ανακριβή δικαιολογητικά

Ρητά καθορίζεται ότι, σε περίπτωση που Προσφέρων:

- δεν υποβάλει ηλεκτρονικά ή/και δεν προσκομίσει σε έντυπη μορφή έγκαιρα και προσηκόντως τα επιβεβαιωτικά των δηλώσεων έγγραφα, οποτεδήποτε απαιτηθούν αυτά από την Εταιρεία,

- διαπιστωθεί, εκ της υποβολής/ προσκόμισης αυτών, ότι, σε οποιοδήποτε φάση της διαδικασίας ή της υλοποίησης της σύμβασης, έχει υποβάλει ανακριβείς ή ψευδείς δηλώσεις ή αλλοιωμένα φωτοαντίγραφα δημοσίων ή ιδιωτικών εγγράφων,

τότε αυτός αποκλείεται από την περαιτέρω διαδικασία, τυχόν αποφάσεις της Εταιρείας ανακαλούνται αμέσως, καταπίπτει υπέρ της ΔΕΗ η Εγγυητική Επιστολή Συμμετοχής ή Καλής Εκτέλεσης και η ΔΕΗ διατηρεί το δικαίωμα αποκλεισμού του από μελλοντικές διαδικασίες.

13.1.1.6 Προστασία Προσωπικών Δεδομένων – Ενημέρωση για την επεξεργασία προσωπικών δεδομένων

Η ΔΕΗ ενημερώνει υπό την ιδιότητά της ως υπεύθυνης επεξεργασίας το φυσικό πρόσωπο που υπογράφει την προσφορά ως Προσφέρων ή ως Νόμιμος Εκπρόσωπος Προσφέροντος, ότι αρμόδια όργανα και στελέχη της ή και τρίτοι, κατ' εντολή και για λογαριασμό της, θα επεξεργάζονται τα ακόλουθα δεδομένα ως εξής:

I. Αντικείμενο επεξεργασίας είναι τα δεδομένα προσωπικού χαρακτήρα που περιέχονται στους φακέλους της προσφοράς και τα αποδεικτικά μέσα τα οποία υποβάλλονται στην ΔΕΗ, στο πλαίσιο της παρούσας Διαδικασίας, από το φυσικό πρόσωπο το οποίο είναι το ίδιο Προσφέρων ή Νόμιμος Εκπρόσωπος Προσφέροντος.

II. Σκοπός της επεξεργασίας είναι η αξιολόγηση του Φακέλου Προσφοράς, η επιλογή του Αντισυμβαλλομένου της Σύμβασης, η προάσπιση των δικαιωμάτων της ΔΕΗ, η εκπλήρωση των εκ του νόμου υποχρεώσεων της ΔΕΗ και η εν γένει ασφάλεια και προστασία των συναλλαγών. Τα δεδομένα ταυτοπροσωπίας και επικοινωνίας θα χρησιμοποιηθούν από την ΔΕΗ και για την ενημέρωση των Προσφερόντων σχετικά με την αξιολόγηση των προσφορών.

III. Αποδέκτες των ανωτέρω δεδομένων στους οποίους κοινοποιούνται είναι:

(α) Πρόσωπα στα οποία η ΔΕΗ αναθέτει την εκτέλεση συγκεκριμένων ενεργειών για λογαριασμό της, δηλαδή οι Σύμβουλοι, τα στελέχη, μέλη Επιτροπών Αξιολόγησης, Χειριστές της Ηλεκτρονικής Διαδικασίας και λοιποί εν γένει προστηθέντες της, υπό τον όρο της τήρησης σε κάθε περίπτωση του απορρήτου.

(β) Το Δημόσιο, άλλοι δημόσιοι φορείς ή δικαστικές αρχές ή άλλες αρχές ή δικαιοδοτικά όργανα, στο πλαίσιο των αρμοδιοτήτων τους.

(γ) Έτεροι Προσφέροντες στη Διαδικασία στο πλαίσιο της αρχής της διαφάνειας και του δικαιώματος υποβολής Αντιρρήσεων

IV. Τα δεδομένα των Προσφορών όλων των Προσφερόντων θα τηρούνται για χρονικό διάστημα για χρονικό διάστημα ίσο με τη διάρκεια της εκτέλεσης της σύμβασης, και μετά τη λήξη αυτής για χρονικό διάστημα πέντε ετών, για μελλοντικούς φορολογικούς-δημοσιονομικούς ή ελέγχους χρηματοδοτών ή άλλους προβλεπόμενους ελέγχους από την κείμενη νομοθεσία, εκτός εάν η νομοθεσία προβλέπει διαφορετική περίοδο διατήρησης. Σε περίπτωση εκκρεμοδικίας αναφορικά με τη σύμβαση τα δεδομένα τηρούνται μέχρι το πέρας της εκκρεμοδικίας. Μετά τη λήξη των ανωτέρω περιόδων, τα προσωπικά δεδομένα θα καταστρέφονται.

V. Το φυσικό πρόσωπο που είναι είτε Προσφέρων είτε Νόμιμος Εκπρόσωπος του Προσφέροντος, μπορεί να ασκεί κάθε νόμιμο δικαίωμά του σχετικά με τα δεδομένα προσωπικού χαρακτήρα που το αφορούν, απευθυνόμενο στον υπεύθυνο προστασίας προσωπικών δεδομένων της ΔΕΗ.

VI. Η ΔΕΗ έχει υποχρέωση να λαμβάνει κάθε εύλογο μέτρο για τη διασφάλιση του απόρρητου και της ασφάλειας της επεξεργασίας των δεδομένων και της προστασίας τους από τυχαία ή αθέμιτη καταστροφή, τυχαία απώλεια, αλλοίωση, απαγορευμένη διάδοση ή πρόσβαση από οποιονδήποτε και κάθε άλλης μορφή αθέμιτη επεξεργασία.

13.1.2 Ειδικές απαιτήσεις

13.1.2.1 Αποκλίσεις από τους Εμπορικούς και Οικονομικούς Όρους της Πρόσκλησης

Δεν επιτρέπονται αποκλίσεις από τους Εμπορικούς και Οικονομικούς όρους της Πρόσκλησης. Οι προσφορές πρέπει να συμμορφώνονται πλήρως προς τους αντίστοιχους όρους και τις απαιτήσεις της Πρόσκλησης.

Σχόλια, παρατηρήσεις ή διευκρινίσεις που αλλοιώνουν τους Εμπορικούς και Οικονομικούς όρους της Πρόσκλησης αντιμετωπίζονται ως Εμπορικές Αποκλίσεις. Προσφορά η οποία θα έχει τέτοιας φύσεως αποκλίσεις θα απορριφθεί.

13.1.3 Εναλλακτικές προσφορές

Εναλλακτικές προσφορές δεν γίνονται δεκτές

13.2 Ηλεκτρονικός Φάκελος Α

Α. Περιεχόμενα Φακέλου Α

Ο ηλεκτρονικός Φάκελος Α με ονομασία «Φάκελος Α - Δικαιολογητικά Συμμετοχής» θα περιέχει σε ψηφιακή μορφή αρχείου pdf ή αντίστοιχου τα ακόλουθα:

13.2.1 Εγγυητικές Επιστολές

Την Εγγυητική Επιστολή Συμμετοχής στη Διαδικασία, σύμφωνα με το επισυναπτόμενο στη Πρόσκλησης Υπόδειγμα και τα καθοριζόμενα στο άρθρο 4 του παρόντος τεύχους.

13.2.2 Δήλωση νομιμοποίησης προσφέροντος

Τη Δήλωση νομιμοποίησης του προσφέροντος συμπληρωμένη και υπογεγραμμένη, σύμφωνα με το Υπόδειγμα που επισυνάπτεται στην Πρόσκληση.

13.2.3 Δήλωση αποδοχής όρων Διαδικασίας Επιλογής και ισχύος προσφοράς

Τη Δήλωση αποδοχής όρων Διαδικασίας Επιλογής και ισχύος προσφοράς συμπληρωμένη και υπογεγραμμένη, σύμφωνα με το Υπόδειγμα που επισυνάπτεται στην Πρόσκληση.

13.2.4 Δήλωση περί Μη Συνδρομής Λόγων Αποκλεισμού (ΔΜΣΛΑ)

Την ΔΜΣΛΑ συμπληρωμένη και υπογεγραμμένη, σύμφωνα με το Υπόδειγμα που επισυνάπτεται στην Πρόσκληση.

13.2.5 Διευκρινίσεις για προσφορές από συμπράξεις/ενώσεις φυσικών ή/και νομικών προσώπων

Στην περίπτωση αυτή υποβάλλονται:

13.2.5.1 Χωριστά από κάθε μέλος αυτής τα παραπάνω στοιχεία 13.2.2 έως 13.2.4. Ειδικότερα στη Δήλωση της παραγράφου 13.2.2 και στο σημείο 4.1 αυτής θα πρέπει να αναγράφεται ρητά ότι η προσφορά υποβάλλεται μέσω της συγκεκριμένης σύμπραξης/ένωσης και να ορίζεται το πρόσωπο που θα υπογράψει από κάθε μέλος αυτής το σχετικό ιδιωτικό συμφωνητικό ή τη συμβολαιογραφική πράξη σύστασης αυτής.

Ειδικά για τις Εγγυητικές Επιστολές της παραγράφου 13.2.1 ισχύουν τα αναφερόμενα στην παράγραφο 11.2 του παρόντος τεύχους. Σε περίπτωση κατάθεσης περισσοτέρων της μιας ΕΕΣ, επισημαίνεται ρητά ότι ισχύουν οι δεσμεύσεις της επόμενης παραγράφου.

13.2.5.2 Δήλωση των φυσικών ή νομικών προσώπων που μετέχουν στη σύμπραξη/ένωση, με την οποία θα δηλώνεται ότι τα υπόψη πρόσωπα σύστησαν την εν λόγω σύμπραξη/ένωση για να αναλάβουν την υλοποίηση της σύμβασης μαζί και ότι ενέχονται και ευθύνονται έναντι της ΔΕΗ σχετικά με τη συμμετοχή τους στη Διαδικασία Επιλογής και την εκτέλεση του αντικειμένου της σύμβασης, ενιαία, αδιαίρετα και σε ολόκληρο.

13.2.5.3 Το σχετικό ιδιωτικό συμφωνητικό ή συμβολαιογραφική πράξη σύστασης της σύμπραξης/ένωσης, στο οποίο θα φαίνονται η έδρα, ο νόμιμος εκπρόσωπος και τα ποσοστά συμμετοχής κάθε μέλους.

13.2.6 Δηλώσεις τυχόν Τρίτου που παρέχει στήριξη

Σε περίπτωση που ο Προσφέρων έχει επικαλεστεί στήριξη τρίτου:

α. Τη Δήλωση νομιμοποίησης για κάθε ένα τυχόν παρέχοντα στήριξη, Τρίτο συμπληρωμένη και υπογεγραμμένη σύμφωνα με το Υπόδειγμα που επισυνάπτεται στην Πρόσκληση.

β. Την ΔΜΣΛΑ για κάθε ένα τυχόν παρέχοντα στήριξη Τρίτο, σύμφωνα με το Υπόδειγμα που επισυνάπτεται στην Πρόσκληση.

B. Υποβολή - Προσκόμιση δικαιολογητικών και στοιχείων

Οι Προσφέροντες δεσμεύονται, **επί ποινή αποκλεισμού**, να υποβάλουν ηλεκτρονικά ή/και να προσκομίσουν σε έντυπη μορφή (πρωτότυπο) σε οποιοδήποτε φάση της Διαδικασίας τους ζητηθεί από τη ΔΕΗ, όλα ή μέρος των σχετικών δικαιολογητικών και στοιχείων που αναφέρονται στις ως άνω δηλώσεις, εντός δέκα (10) ημερών και όπως αυτά εξειδικεύονται παρακάτω.

Τα έγγραφα του παρόντος υποβάλλονται κατ΄ αναλογική εφαρμογή του ν. 4250/2014 (Α΄ 94). Ειδικά τα αποδεικτικά τα οποία αποτελούν ιδιωτικά έγγραφα, μπορεί να γίνονται αποδεκτά και σε απλή φωτοτυπία, εφόσον συνυποβάλλεται δήλωση στην οποία βεβαιώνεται η ακρίβειά τους και η οποία φέρει υπογραφή έως και δέκα (10) ημέρες πριν την καταληκτική ημερομηνία υποβολής των προσφορών.

Αν δεν προσκομισθούν τα εν λόγω δικαιολογητικά ή υπάρχουν ελλείψεις σε αυτά που υποβλήθηκαν και ο Προσφέρων υποβάλλει εντός της προαναφερόμενης προθεσμίας αίτημα προς την εταιρεία για την παράταση της προθεσμίας υποβολής, το οποίο συνοδεύεται με αποδεικτικά έγγραφα από τα οποία να αποδεικνύεται ότι έχει αιτηθεί τη χορήγηση των δικαιολογητικών, η ΔΕΗ παρατείνει την προθεσμία υποβολής αυτών για όσο χρόνο απαιτηθεί για τη χορήγησή τους από τις αρμόδιες αρχές.

I. Αποδεικτικά νομιμοποίησης προσφέροντος

Τα αποδεικτικά στοιχεία του περιεχομένου της Δήλωσης της παραγράφου 13.2.2, ήτοι τα κατά περίπτωση νομιμοποιητικά έγγραφα σύστασης και νόμιμης εκπροσώπησης (όπως καταστατικά, πιστοποιητικά μεταβολών, αντίστοιχα ΦΕΚ, συγκρότηση Δ.Σ. σε σώμα, σε περίπτωση Α.Ε. κ.λπ., ανάλογα με τη νομική μορφή του Προσφέροντος) και αποδεικτικό (πιστοποιητικό/ βεβαίωση) εγγραφής στο Γ.Ε.ΜΗ. ή/και σε αντίστοιχο μητρώο ή/και ειδικές άδειες εφόσον απαιτούνται. Από τα ανωτέρω έγγραφα πρέπει να προκύπτουν η νόμιμη σύσταση του νομικού προσώπου, όλες οι σχετικές τροποποιήσεις των καταστατικών, το/τα πρόσωπο/α που δεσμεύει/ουν νόμιμα το νομικό πρόσωπο κατά την ημερομηνία διενέργειας της Διαδικασίας Επιλογής (απόφαση συμμετοχής στη Διαδικασία Επιλογής, νόμιμος εκπρόσωπος, δικαίωμα υπογραφής κ.λπ.) καθώς και η θητεία του/των ή/και των μελών του διοικητικού οργάνου.

II. Αποδεικτικά που σχετίζονται με ποινικές καταδίκες

Απόσπασμα ποινικού μητρώου ή ελλείψει αυτού ισοδύναμο έγγραφο, από το οποίο να προκύπτει ότι δεν υπάρχει σε βάρος του Προσφέροντος οριστική καταδικαστική απόφαση για σοβαρό επαγγελματικό παράπτωμα ή κάποιο από τα αδικήματα της συμμετοχής σε εγκληματική οργάνωση, της διαφθοράς – δωροδοκίας, της απάτης κατά την έννοια των άρ. 386 και 386^{Α} του Ποινικού Κώδικα, της τρομοκρατίας, της νομιμοποίησης εσόδων από παράνομες δραστηριότητες ή της χρηματοδότησης της τρομοκρατίας και της παιδικής εργασίας και άλλων μορφών εμπορίας ανθρώπων.

Σε περίπτωση που το απόσπασμα ποινικού μητρώου φέρει καταδικαστικές αποφάσεις, οι Προσφέροντες θα πρέπει να επισυνάπτουν τις αναφερόμενες σε αυτό καταδικαστικές αποφάσεις.

Σε περίπτωση συμμετοχής νομικού προσώπου, το ως άνω δικαιολογητικό αφορά ιδίως:

i. τους Διαχειριστές, όταν το νομικό πρόσωπο είναι Ο.Ε., Ε.Ε., Ε.Π.Ε. ή Ι.Κ.Ε.,
ii. τον Πρόεδρο του Δ.Σ., το Διευθύνοντα Σύμβουλο και τα λοιπά μέλη του Δ.Σ., όταν το νομικό πρόσωπο είναι Α.Ε.,
iii. σε κάθε άλλη περίπτωση νομικού προσώπου, τους νομίμους εκπροσώπους του και
iv. στις περιπτώσεις των συνεταιρισμών τα μέλη του Διοικητικού Συμβουλίου.

III. Αποδεικτικά που σχετίζονται με καταβολή φόρων ή εισφορών κοινωνικής ασφάλισης

α. Πιστοποιητικό/ά ασφαλιστικής ενημερότητας

β. Πιστοποιητικό φορολογικής ενημερότητας

IV. <u>Αποδεικτικά που σχετίζονται με φερεγγυότητα, σύγκρουση συμφερόντων ή επαγγελματικό παράπτωμα:</u>

α. Πιστοποιητικό αρμόδιας δικαστικής ή διοικητικής Αρχής, από το οποίο να προκύπτει ότι ο Προσφέρων δεν τελεί σε πτώχευση ούτε σε διαδικασία κήρυξης πτώχευσης, δεν τελεί σε κοινή εκκαθάριση ούτε υπό διαδικασία έκδοσης απόφασης κοινής εκκαθάρισης, σύμφωνα με την εκάστοτε ισχύουσα εθνική νομοθεσία.

β. Πιστοποιητικό από τη Διεύθυνση Προγραμματισμού και Συντονισμού της Επιθεώρησης Εργασιακών Σχέσεων, από το οποίο να προκύπτουν οι πράξεις επιβολής προστίμου που έχουν εκδοθεί σε βάρος του ενδιαφερόμενου σε χρονικό διάστημα δύο (2) ετών πριν από την ημερομηνία λήξης προθεσμίας υποβολής προσφοράς. Μέχρι να καταστεί εφικτή η έκδοση του παραπάνω πιστοποιητικού, αυτό αντικαθίσταται από δήλωση του Προσφέροντος, χωρίς να απαιτείται επίσημη δήλωση του ΣΕΠΕ σχετικά με την έκδοση του πιστοποιητικού.

γ. Για τους υπόλοιπους λόγους αποκλεισμού, που περιλαμβάνονται στην ΔΜΣΛΑ ισχύει η δέσμευση της παραγράφου 5 της δήλωσης νομιμοποίησης προσφέροντος.

Τα παραπάνω πιστοποιητικά συντάσσονται ή/και εκδίδονται με βάση την ισχύουσα νομοθεσία της χώρας που είναι εγκατεστημένος ο Προσφέρων, από την οποία και εκδίδεται το σχετικό πιστοποιητικό.
Σε περίπτωση που ορισμένα από τα πιο πάνω δικαιολογητικά των περιπτώσεων ΙΙ έως IV δεν εκδίδονται ή δεν καλύπτουν στο σύνολό τους όλες τις πιο πάνω περιπτώσεις, πρέπει επί ποινή αποκλεισμού να αναπληρωθούν με Ένορκη Βεβαίωση του Προσφέροντος ή, στα κράτη όπου δεν προβλέπεται Ένορκη Βεβαίωση, με Δήλωση του Προσφέροντος ενώπιον δικαστικής ή διοικητικής αρχής, συμβολαιογράφου ή αρμόδιου επαγγελματικού οργανισμού της χώρας του Προσφέροντος στην οποία θα βεβαιώνεται ότι δεν εκδίδονται τα συγκεκριμένα έγγραφα και ότι δεν συντρέχουν στο συγκεκριμένο πρόσωπο του Προσφέροντος οι ανωτέρω νομικές καταστάσεις. Η Ένορκη αυτή Βεβαίωση ή Δήλωση θα συνυποβληθεί υποχρεωτικά μαζί με τα λοιπά Δικαιολογητικά Συμμετοχής.

Προσφέρων που εμπίπτει σε μια από τις καταστάσεις που αναφέρονται ανωτέρω μπορεί να προσκομίζει στοιχεία, προκειμένου να αποδείξει ότι τα μέτρα που έλαβε επαρκούν για να αποδείξουν την αξιοπιστία του, παρότι συντρέχει ο σχετικός λόγος αποκλεισμού. Εάν τα στοιχεία κριθούν επαρκή, ο εν λόγω Προσφέρων δεν αποκλείεται από τη Διαδικασία σύναψης σύμβασης. Τα μέτρα που λαμβάνονται από τους Προσφέροντες αξιολογούνται σε συνάρτηση με τη σοβαρότητα και τις ιδιαίτερες περιστάσεις του ποινικού αδικήματος ή του παραπτώματος. Αν τα μέτρα κριθούν ανεπαρκή, γνωστοποιείται στον Προσφέροντα το σκεπτικό της απόφασης αυτής.

Κατ' εξαίρεση, όταν ο Προσφέρων εμπίπτει σε μια από τις καταστάσεις που αναφέρονται στην πιο πάνω παράγραφο ΙΙΙ και ο αποκλεισμός είναι σαφώς δυσανάλογος, ιδίως όταν μόνο μικρά ποσά των φόρων ή των εισφορών κοινωνικής ασφάλισης δεν έχουν καταβληθεί ή όταν ο Προσφέρων ενημερώθηκε

σχετικά με το ακριβές ποσό που οφείλεται λόγω αθέτησης των υποχρεώσεών του όσον αφορά στην καταβολή φόρων ή εισφορών κοινωνικής ασφάλισης σε χρόνο κατά τον οποίο δεν είχε δυνατότητα να λάβει μέτρα, πριν από την εκπνοή της προθεσμίας υποβολής προσφοράς στα πλαίσια της παρούσας Πρόσκλησης, δεν εφαρμόζεται ο εν λόγω αποκλεισμός.

Τα κριτήρια αποκλεισμού που σχετίζονται με τα ανωτέρω δικαιολογητικά και στοιχεία ισχύουν με την επιφύλαξη της δυνατότητας του Προσφέροντος να λάβει επανορθωτικά μέτρα– δηλαδή της δυνατότητας να αποδείξει την αξιοπιστία του παρά την ύπαρξη ενός λόγου αποκλεισμού. Για τον σκοπό αυτό, ο Προσφέρων πρέπει να αποδείξει ότι:

- έχει καταβάλει ή δεσμευθεί να καταβάλει αποζημίωση για τυχόν ζημίες που προκλήθηκαν από το ποινικό αδίκημα ή το παράπτωμα·
- έχει διευκρινίσει τα γεγονότα και τις περιστάσεις με ολοκληρωμένο τρόπο, μέσω ενεργού συνεργασίας με τις ερευνητικές αρχές· και
- έχει λάβει συγκεκριμένα τεχνικά και οργανωτικά μέτρα καθώς και μέτρα σε επίπεδο προσωπικού κατάλληλα για την αποφυγή περαιτέρω ποινικών αδικημάτων ή παραπτωμάτων.

Εναπόκειται στη ΔΕΗ να αξιολογεί τα μέτρα που λήφθηκαν και να καθορίζει κατά πόσον είναι επαρκή για να επιτραπεί στον Προσφέροντα να συμμετάσχει στη διαδικασία, αιτιολογώντας την απόφασή της στον Προσφέροντα σε περίπτωση αποκλεισμού του.

Τέλος, επισημαίνεται, ότι σε περίπτωση που Προσφέρων δεν υποβάλει εμπρόθεσμα όλα ή μέρος των κατά περίπτωση απαιτούμενων δικαιολογητικών και στοιχείων ή αποδειχτεί κατά τη διαδικασία του ελέγχου, ότι δεν πληροί τις προϋποθέσεις συμμετοχής στη διενεργηθείσα διαδικασία, επέρχεται αποκλεισμός του από την περαιτέρω διαδικασία, απορρίπτεται η προσφορά του και καταπίπτει η εγγυητική επιστολή συμμετοχής του, σύμφωνα με το άρθρο 11 του παρόντος τεύχους.

13.3 Ηλεκτρονικός Φάκελος Β

Ο ηλεκτρονικός Φάκελος Β με την ένδειξη «Τεχνική Προσφορά» θα περιέχει σε ψηφιακή μορφή αρχείου pdf ή αντίστοιχου τα ακόλουθα:

13.3.1 Αποδεικτικά τεχνικής και επαγγελματικής ικανότητας

α. Αποδεικτικά εμπειρίας
Τους Πίνακες Εμπειρίας & Συστάσεων, μαζί με τις αντίστοιχες βεβαιώσεις/συστάσεις, καθώς και τον Πίνακα κυριοτέρων συμβάσεων μαζί με τα αντίστοιχα αποδεικτικά καλής εκτέλεσης, που προβλέπονται στην παράγραφο 3.2.Β.1 του παρόντος τεύχους.

β. Τα απαιτούμενα στην παράγραφο 3.2.Β.2 του παρόντος τεύχους Αποδεικτικά /Στοιχεία για διάθεση, χρήση τεχνικού εξοπλισμού ή/και εγκαταστάσεων

13.3.2 Συστήματα διασφάλισης ποιότητας

Τα απαιτούμενα στην παράγραφο 3.2.Γ του παρόντος τεύχους πιστοποιητικά σε ισχύ

13.3.3 Τεχνικά στοιχεία προσφοράς

13.3.3.1 Τεχνική έκθεση
Τεχνική έκθεση στην οποία θα περιγράφονται οι μέθοδοι, που προτίθεται να χρησιμοποιήσει ο Προσφέρων κατά την εκτέλεση των διαφόρων επιμέρους τμημάτων του αντικειμένου της σύμβασης.

Από την Τεχνική Έκθεση θα πρέπει να προκύπτει η επάρκεια του μηχανικού εξοπλισμού που προτίθεται να χρησιμοποιήσει για το σκοπό αυτό ο Προσφέρων.

13.3.3.2 Οργανόγραμμα

Οργανόγραμμα του Προσωπικού του προσφέροντος, το οποίο θα περιλαμβάνει τα επικεφαλής στελέχη κατά ειδικότητα με τις αρμοδιότητες του καθενός χωριστά, και ονομαστικά τον Επιβλέποντα Μηχανικό του προσφέροντος, τους λοιπούς Μηχανικούς και τους Εργοδηγούς καθώς και τον αριθμό ανά ειδικότητα του τεχνικού προσωπικού που θα χρησιμοποιηθούν για την παροχή της Υπηρεσίας.

13.3.3.3 Πρόγραμμα υλοποίησης σύμβασης

Πρόγραμμα υλοποίησης της σύμβασης το οποίο θα λαμβάνει υπόψη τα στάδια και χρόνους που αναφέρονται στην Τεχνική Περιγραφή και θα είναι σύμφωνα με το ενδεικτικό πρόγραμμα που επισυνάπτεται.

13.3.3.4 Οποιαδήποτε, κατά την κρίση του Προσφέροντος, επιπλέον τεχνικά στοιχεία.

13.3.4 Υποπρομηθευτές/υποκατασκευαστές ή υπεργολάβοι

Ο Προσφέρων πρέπει να αναφέρει στην προσφορά του τυχόν υποπρομηθευτές/υποκατασκευαστές ή υπεργολάβους και το αντίστοιχο τμήμα της σύμβασης που προτίθεται να αναθέσει υπό μορφή υπεργολαβίας σε τρίτους. Επίσης θα συμπεριλάβει:

α. Δηλώσεις συνεργασίας των προτεινόμενων υποπρομηθευτών/ υποκατασκευαστών/ υπεργολάβων με τις οποίες θα δεσμεύονται ότι θα συνεργαστούν με τον Προσφέροντα σε περίπτωση επιλογής του ως Αντισυμβαλλομένου.

   Σε περίπτωση που οι σχετικές δηλώσεις συνεργασίας δεν υποβληθούν με την προσφορά ή, εφόσον υποβληθούν, κάποιος εκ των ως άνω προτεινόμενων υποπρομηθευτής / υποκατασκευαστής ή υπεργολάβος δεν τύχει της εγκρίσεως της Εταιρείας, οι αντίστοιχοι υποπρομηθευτές/ υποκατασκευαστές και υπεργολάβοι δεν θα περιληφθούν στη Σύμβαση.
   Στην περίπτωση αυτή ο Προσφέρων, εφόσον επιλεγεί Αντισυμβαλλόμενος, υποχρεούται κατά την εκτέλεση της Σύμβασης να προτείνει στην Εταιρεία άλλον υποπρομηθευτή/ υποκατασκευαστή ή υπεργολάβο, σύμφωνα με τις απαιτήσεις του σχετικού άρθρου του τεύχους «Ειδικοί Όροι Σύμβασης».

13.3.5 Στήριξη στις ικανότητες άλλων οντοτήτων

Τα αποδεικτικά μέσα της παραγράφου 3.5 του παρόντος τεύχους, στην περίπτωση κατά την οποία ο Προσφέρων επικαλείται χρηματοοικονομική, τεχνική ή και επαγγελματική ικανότητα τρίτου.

13.3.6 Προσφορές σύμπραξης/ένωσης

Στην περίπτωση υποβολής προσφοράς από σύμπραξη/ένωση φυσικών ή και νομικών προσώπων, τα στοιχεία που αναφέρονται στην ως άνω παράγραφο 13.3.2 θα υποβληθούν από κάθε μέλος αυτής ξεχωριστά.

13.3.7 Γνώση τοπικών συνθηκών

Βεβαίωση της αρμόδιας Διεύθυνσης της Εταιρείας ότι ο Προσφέρων επισκέφθηκε τον τόπο εκτέλεσης του αντικειμένου της σύμβασης και ενημερώθηκε για τις τοπικές συνθήκες σε σχέση με αυτό.

13.4 Οικονομική Προσφορά

Η Οικονομική Προσφορά θα περιέχει:

13.4.1 Συμπληρωμένη/ες από τους Προσφέροντες με τις/τα προσφερόμενες/α τιμές/τιμήματα (και τις ποσότητες όπου απαιτείται από τη Πρόσκληση την αντίστοιχη ειδική ηλεκτρονική φόρμα του Συστήματος, σύμφωνα με το εγχειρίδιο χρήσης αυτού.

13.4.2 Την Οικονομική Προσφορά και σε μορφή αρχείου pdf ή αντίστοιχου, συμπληρωμένη ως προς τη μορφή και το περιεχόμενο με βάση το/τα επισυναπτόμενο/α σχετικό/α έντυπο/α στη Πρόσκληση υπόδειγμα/τα, την οποία πρέπει να υπογράψει ψηφιακά και να την υποβάλει ηλεκτρονικά σύμφωνα με τις οδηγίες χρήσης του Συστήματος.

Ειδικότερα, τα αρχεία σε μορφή pdf ή αντίστοιχου που πρέπει να συμπεριλάβουν οι Προσφέροντες, δεδομένου ότι η διαδικασία διενεργείται με το Σύστημα προσφοράς με ελεύθερη συμπλήρωση ανοικτού Τιμολογίου,, είναι:

13.4.2.1 Το «Τιμολόγιο Προσφοράς» και το Τεύχος «Προμέτρηση – Προϋπολογισμός Προσφοράς»

13.4.2.2 Τον Πίνακα κατανομής Τιμήματος (σε περίπτωση σύμπραξης/ένωσης).

Εφιστάται η προσοχή στους Προσφέροντες ότι:

- Η συμπλήρωση των οικονομικών στοιχείων στα παραπάνω έντυπα ή τεύχη πρέπει απαραίτητα να γίνει με ευκρίνεια.
- Απαγορεύονται σχόλια, όροι, προϋποθέσεις, που σχετίζονται με τις/το προσφερόμενες/ο τιμές/τίμημα.

13.4.3 Τα κοινά στοιχεία που περιλαμβάνονται στην/στις ειδική/ες ηλεκτρονική/ες φόρμα/ες του Συστήματος και στην υποβαλλόμενη σε μορφή αρχείου pdf οικονομική προσφορά πρέπει να συμφωνούν. Σε αντίθετη περίπτωση, υπερισχύουν τα στοιχεία της υποβαλλόμενης σε μορφή αρχείου pdf οικονομικής προσφοράς, τα οποία και θα ληφθούν υπόψη για την αξιολόγηση των προσφορών. Προς τούτο, στην περίπτωση αυτή θα εφαρμοστούν τα προβλεπόμενα στην παράγραφο 15.4.2 (τελευταίο εδάφιο) του παρόντος τεύχους.

Άρθρο 14
Ηλεκτρονική Αποσφράγιση και Τυπική Αξιολόγηση Προσφορών

14.1 Ηλεκτρονική Αποσφράγιση προσφορών – πρόσβαση Προσφερόντων

14.1.1 Η ηλεκτρονική αποσφράγιση των προσφορών γίνεται, μετά από σχετική ενημέρωση των Προσφερόντων, σε εύλογο χρονικό διάστημα από την καταληκτική ημερομηνία και ώρα υποβολής των προσφορών που ορίζεται στην παράγραφο 1.5 του παρόντος τεύχους, από την ορισμένη για το σκοπό αυτό Επιτροπή στο Σύστημα.

14.1.2 Κατά την προαναφερθείσα ημερομηνία και ώρα αποσφραγίζονται οι Φάκελοι Α (Τυπικά Στοιχεία)

14.2 Τυπική Αξιολόγηση προσφορών

14.2.1 Στο πλαίσιο της τυπικής αξιολόγησης των προσφορών η Επιτροπή ελέγχει την ύπαρξη και την πληρότητα των απαιτούμενων ψηφιακών εγγράφων σύμφωνα με την παράγραφο 13.2 του παρόντος τεύχους. Επίσης η Επιτροπή ελέγχει εάν στο Φάκελο Α υπάρχουν τυχόν ψηφιακά έγγραφα, πέραν των προβλεπομένων στην Πρόσκληση, στα οποία τίθενται όροι και προϋποθέσεις που εμπίπτουν στην παράγραφο 12.3 του παρόντος τεύχους.

14.2.2 Κατά τη διαδικασία αξιολόγησης των προσφορών, η αρμόδια Επιτροπή μπορεί, τηρώντας τις αρχές της ίσης μεταχείρισης και της διαφάνειας, να ζητεί μέσω του Συστήματος από τους Προσφέροντες, όταν οι πληροφορίες ή η τεκμηρίωση που πρέπει να υποβάλλονται είναι ή εμφανίζονται ελλιπείς ή λανθασμένες, συμπεριλαμβανομένων εκείνων στις Υπεύθυνες Δηλώσεις, ή όταν λείπουν συγκεκριμένα έγγραφα, να υποβάλουν, να συμπληρώνουν, να αποσαφηνίζουν ή να ολοκληρώνουν τις σχετικές πληροφορίες ή τεκμηρίωση, εντός τακτής προθεσμίας όχι μικρότερης των επτά (7) ημερών και όχι μεγαλύτερης των είκοσι (20) ημερών από την ημερομηνία κοινοποίησης σε αυτούς της σχετικής πρόσκλησης.

Μετά την καταληκτική ημερομηνία υποβολής των Προσφορών δεν γίνεται αποδεκτή αλλά απορρίπτεται ως απαράδεκτη κάθε διευκρίνιση, τροποποίηση ή απόκρουση όρου της Πρόσκλησης ή της Προσφοράς.
Διευκρινίσεις δίνονται μόνο όταν ζητούνται από την αρμόδια Επιτροπή και λαμβάνονται υπόψη μόνο εκείνες που αναφέρονται στα σημεία που ζητήθηκαν. Στην περίπτωση αυτή η παροχή διευκρινίσεων είναι υποχρεωτική για τον Προσφέροντα και δεν θεωρείται αντιπροσφορά.
Οι διευκρινίσεις των Προσφερόντων πρέπει να δίνονται μέσω της ηλεκτρονικής πλατφόρμας του Συστήματος, εφόσον ζητηθούν, σε χρόνο που θα ορίζει η αρμόδια Επιτροπή.

Στο πλαίσιο αυτό αποσαφηνίζεται ότι προσφορές οι οποίες δεν θα περιλαμβάνουν στο Φάκελο Α την Εγγυητική Επιστολή Συμμετοχής, τις Δηλώσεις νομιμοποίησης, αποδοχής όρων και ισχύος προσφορών, την ΔΜΣΛΑ και την τυχόν δήλωση/έγγραφο του προσφέροντος για ύπαρξη εμπιστευτικών στοιχείων, καθώς και σε περίπτωση σύμπραξης/ένωσης φυσικών ή/και νομικών προσώπων ή επίκλησης της ικανότητας Τρίτου τις σχετικές αντίστοιχες δηλώσεις, θα απορρίπτονται.
Η ΔΕΗ δύναται να κάνει δεκτές συμπληρώσεις ή/και διευκρινίσεις που υποβάλλονται, κατόπιν αιτήματός της, επί των παραπάνω υποβληθέντων μαζί με την προσφορά εγγράφων, εφόσον ο Προσφέρων με τις συμπληρώσεις και διευκρινίσεις αυτές συμμορφώνεται πλήρως με τους όρους και τις απαιτήσεις της Πρόσκλησης.

Ειδικότερα για την Εγγυητική Επιστολή Συμμετοχής γίνεται αποδεκτή συμπλήρωσή της μόνον προς πλήρη συμμόρφωση με το συμπεριλαμβανόμενο στη Πρόσκλησης υπόδειγμα αυτής.

Όσον αφορά τα υπόλοιπα στοιχεία του φακέλου Α η ΔΕΗ δύναται να κάνει δεκτή την υποβολή αυτών και εκ των υστέρων, με τυχόν αντίρρησή που θα υποβάλει ο Προσφέρων κατά της τυπικής απόρριψης προσφοράς λόγω έλλειψής τους από την κατατεθείσα προσφορά, εφόσον ο Προσφέρων με την εκ των υστέρων, κατά τα ανωτέρω, προσκόμισή τους συμμορφώνεται πλήρως με τους όρους και τις απαιτήσεις της Πρόσκλησης.

14.2.3 Η Επιτροπή αφού λάβει υπόψη τα προβλεπόμενα στην Πρόσκληση, κρίνει ποιες Προσφορές θα πρέπει να αποκλεισθούν από την παραπέρα διαδικασία, λόγω μη

ικανοποίησης των απαιτήσεων της Πρόσκλησης ως προς την πληρότητα και την επάρκεια των στοιχείων του Φακέλου Α των προσφορών.

14.2.4 Η υπόψη Επιτροπή καταχωρεί σε σχετικό Πρακτικό το αποτέλεσμα της τυπικής αξιολόγησης των προσφορών.
Το αποτέλεσμα της τυπικής αξιολόγησης των προσφορών γνωστοποιείται σε όλους τους Προσφέροντες από την αρμόδια Επιτροπή , μέσω της καταχώρισής του στο Σύστημα και την αποστολή, μέσω του Συστήματος, σχετικού ηλεκτρονικού μηνύματος.
Για τις τυχόν απορριφθείσες προσφορές παρατίθενται αναλυτικά οι λόγοι που αποκλείσθηκε κάθε μία εξ αυτών
Σε περίπτωση υποβολής μέσω του συστήματος γραπτής αίτησης Προσφέροντος για παροχή σχετικών στοιχείων, που αφορούν τη φάση αυτή ή οποιαδήποτε επόμενη φάση της διαδικασίας, τα αιτηθέντα στοιχεία γνωστοποιούνται το αργότερο εντός δεκαπέντε (15) ημερών από την παραλαβή της αίτησης αυτής, πλην τυχόν συγκεκριμένων και ειδικών στοιχείων που έχουν συμπεριληφθεί με μέριμνα και ευθύνη του προσφέροντος, σύμφωνα με την παράγραφο 13.1.1.3 του παρόντος τεύχους, τα οποία έχουν χαρακτηριστεί και σημανθεί καταλλήλως από αυτούς ως «Εμπιστευτικά Στοιχεία Προσφοράς» προς διασφάλιση των συμφερόντων τους, καθότι κρίνουν ότι τα υπόψη στοιχεία προστατεύονται από εμπορικό, βιομηχανικό ή επαγγελματικό κ.λπ. απόρρητο. Σε περίπτωση που ο Προσφέρων παραλείψει να χαρακτηρίσει κατά τα ως άνω τα υπόψη στοιχεία της προσφοράς του η ΔΕΗ ουδεμία ευθύνη φέρει για την γνωστοποίησή τους κατά τ' ανωτέρω.

14.2.5 Οι Προσφέροντες των οποίων οι προσφορές απορρίπτονται, έχουν δικαίωμα υποβολής Αντιρρήσεων σύμφωνα με τα οριζόμενα στο άρθρο 16 του παρόντος τεύχους.

14.3 <u>Διαχείριση τυπικά απορριφθεισών προσφορών</u>
Σε κάθε Προσφέροντα που αποκλείστηκε από την Επιτροπή θα επιστρέφεται επί αποδείξει, η πρωτότυπη Εγγυητική Επιστολή Συμμετοχής (ΕΕΣ) στη Διαδικασία.
Η επιστροφή αυτή πραγματοποιείται μετά την άπρακτη παρέλευση των προθεσμιών για την άσκηση Αντιρρήσεων. Επίσης, μπορεί να παραληφθεί από τον Προσφέροντα και πριν από τη λήξη των προθεσμιών αυτών, εφόσον ο Προσφέρων αποστείλει μέσω του Συστήματος Επιστολή ψηφιακά υπογεγραμμένη με την οποία θα δηλώνει ότι παραιτείται από το δικαίωμα υποβολής Αντιρρήσεων. Σε αντίθετη περίπτωση η ΕΕΣ θα επιστραφεί στον Προσφέροντα μετά την έκδοση τυχόν απορριπτικής απόφασης επί των Αντιρρήσεων.
Η τεχνική και οικονομική προσφορά παραμένουν στο σύστημα χωρίς να είναι προσβάσιμες από οποιονδήποτε.

14.4 <u>Ηλεκτρονική Αποσφράγιση τεχνικών προσφορών – πρόσβαση Προσφερόντων</u>

14.4.1 Η ηλεκτρονική αποσφράγιση των τεχνικών προσφορών γίνεται, μετά από σχετική ενημέρωση των Προσφερόντων των οποίων οι προσφορές έχουν κριθεί τυπικά αποδεκτές σύμφωνα με τα προαναφερόμενα, από την ορισμένη για το σκοπό αυτό Επιτροπή στο Σύστημα.

14.4.2 Κατά την ορισθείσα ημερομηνία και ώρα αποσφραγίζονται οι Φάκελοι Β (Τεχνικά Στοιχεία)

Άρθρο 15
Τεχνική και Οικονομική Αξιολόγηση Προσφορών

15.1 Διαδικασία αξιολόγησης προσφορών

15.1.1 Η αξιολόγηση των προσφορών διενεργείται σε δύο διαδοχικές φάσεις:

- Έλεγχος πλήρωσης κριτηρίων επιλογής και τεχνικών στοιχείων προσφορών
- Αποσφράγιση – αξιολόγηση Οικονομικών προσφορών
-

15.1.2 Επικοινωνία με Προσφέροντες

Η αρμόδια Επιτροπή προκειμένου να φέρει σε πέρας το έργο της:

α. Μπορεί, τηρώντας τις αρχές της ίσης μεταχείρισης και της διαφάνειας, να ζητεί μέσω του Συστήματος από τους Προσφέροντες, όταν οι πληροφορίες ή η τεκμηρίωση που πρέπει να υποβάλλονται είναι ή εμφανίζονται ελλιπείς ή λανθασμένες, ή όταν λείπουν συγκεκριμένα έγγραφα, να υποβάλουν, να συμπληρώνουν, να αποσαφηνίζουν ή να ολοκληρώνουν τις σχετικές πληροφορίες ή τεκμηρίωση, εντός τακτής προθεσμίας όχι μικρότερης των επτά (7) ημερών και όχι μεγαλύτερης των είκοσι (20) ημερών από την ημερομηνία κοινοποίησης σε αυτούς της σχετικής πρόσκλησης.

Όσον αφορά τα υπόλοιπα στοιχεία του φακέλου Β που απαιτούνται από τη Πρόσκληση για την τεχνική αξιολόγηση της προσφοράς η ΔΕΗ Α.Ε. δύναται να κάνει δεκτή την υποβολή αυτών και εκ των υστέρων, με τυχόν Αντιρρήσεις που θα ασκήσει ο Προσφέρων κατά της τεχνικής απόρριψης προσφοράς λόγω έλλειψης τους από την κατατεθείσα προσφορά, εφόσον ο Προσφέρων με την εκ των υστέρων, κατά τα ανωτέρω, προσκόμισή τους συμμορφώνεται πλήρως με τους όρους και τις απαιτήσεις της Πρόσκλησης.

15.1.3 Ανακοίνωση αποτελεσμάτων αξιολόγησης προσφορών

Το αποτέλεσμα αξιολόγησης των προσφορών σε κάθε φάση της τεχνικής και οικονομικής αξιολόγησής τους γνωστοποιείται σε όλους τους Προσφέροντες από την αρμόδια Επιτροπή μέσω της καταχώρισής του στο Σύστημα και την αποστολή, μέσω του Συστήματος, σχετικού ηλεκτρονικού μηνύματος.

Για τις τυχόν απορριφθείσες προσφορές παρατίθενται αναλυτικά οι λόγοι που αποκλείσθηκε κάθε μία εξ αυτών.

Σε περίπτωση δε υποβολής μέσω του Συστήματος αιτήματος Προσφέροντα σχετικά με τα αποτελέσματα αξιολόγησης της προσφοράς του μετά το πέρας κάθε φάσης της τεχνικής και οικονομικής αξιολόγησης και εφόσον τα στοιχεία αυτά δεν έχουν δοθεί σε προηγούμενο χρονικό σημείο σύμφωνα με τα ανωτέρω, η γνωστοποίησή τους, επίσης μέσω του Συστήματος, γίνεται το αργότερο εντός δεκαπέντε (15) ημερών από την παραλαβή της αίτησης αυτής, πλην τυχόν συγκεκριμένων και ειδικών στοιχείων που έχουν συμπεριληφθεί με μέριμνα και ευθύνη του προσφέροντος, σύμφωνα με την παράγραφο 13.1.1.3 του παρόντος τεύχους, τα οποία έχουν χαρακτηριστεί και σημανθεί καταλλήλως από αυτούς ως «Εμπιστευτικά Στοιχεία Προσφοράς» προς διασφάλιση των συμφερόντων τους, καθότι κρίνουν ότι τα υπόψη στοιχεία προστατεύονται από εμπορικό, βιομηχανικό ή επαγγελματικό κ.λπ. απόρρητο. Σε περίπτωση που ο προσφέρων παραλείψει να χαρακτηρίσει κατά τα ως άνω τα υπόψη στοιχεία της προσφοράς του η ΔΕΗ ουδεμία ευθύνη φέρει για την γνωστοποίησή τους μετά την ηλεκτρονική αποσφράγιση των προσφορών.

15.2 Έλεγχος συμμόρφωσης προσφορών με τα κριτήρια επιλογής, τις τεχνικές απαιτήσεις και τους εν γένει εμπορικούς όρους της Πρόσκλησης.

Στη συνέχεια η αρμόδια Επιτροπή προβαίνει σε λεπτομερή έλεγχο και αξιολόγηση όλων των δικαιολογητικών και στοιχείων που περιέχονται στο Φάκελο Β, προκειμένου να διαπιστώσει αν η προσφορά κάθε προσφέροντος ανταποκρίνεται πλήρως στις απαιτήσεις της Πρόσκλησης, όσον αφορά τη δυνατότητά του να υλοποιήσει το αντικείμενο της σύμβασης έγκαιρα, με πληρότητα και αρτιότητα.

15.3 Αποτελέσματα τεχνικής αξιολόγησης

Η αρμόδια Επιτροπή , αφού λάβει υπόψη της τα προβλεπόμενα στη Πρόσκληση, κρίνει αιτιολογημένα για όσες προσφορές τυχόν θα πρέπει να απορριφθούν.
Το αποτέλεσμα της Τεχνικής Αξιολόγησης των Προσφορών ανακοινώνεται στη συνέχεια στους Προσφέροντες σύμφωνα με τα αναφερθέντα στην πιο πάνω παράγραφο 15.1.3.

Οι Προσφέροντες, των οποίων απορρίπτονται οι προσφορές, έχουν δικαίωμα Αντιρρήσεων σύμφωνα με τα οριζόμενα στο άρθρο 16 του παρόντος τεύχους.

Σε περίπτωση απόρριψης προσφοράς και μετά την άπρακτη παρέλευση των προθεσμιών για την άσκηση Αντιρρήσεων ή σε περίπτωση που ασκηθούν, μετά την έκδοση απορριπτικής απόφασης επί Αντιρρήσεων η οικονομική προσφορά παραμένει στο σύστημα χωρίς να είναι προσβάσιμη από οποιονδήποτε. Η Εγγυητική Επιστολή Συμμετοχής διαβιβάζεται στον εκδότη αυτής.

15.4. Αποσφράγιση Οικονομικών Προσφορών – Πρόσβαση Προσφερόντων - Αξιολόγηση

15.4.1 Τα οικονομικά στοιχεία των προσφορών, που κρίθηκαν αποδεκτές μετά την τυπική και τεχνική αξιολόγηση, αποσφραγίζονται ηλεκτρονικά από την αρμόδια Επιτροπή, σε ημερομηνία και ώρα που θα έχει προκαθοριστεί στο Σύστημα.
Αμέσως μετά την ηλεκτρονική αποσφράγιση των οικονομικών προσφορών, οι Προσφέροντες στη φάση αυτή της διαδικασίας θα έχουν πλήρη ηλεκτρονική πρόσβαση στο περιεχόμενο αυτών.

15.4.2 Στη συνέχεια η αρμόδια Επιτροπή:

α. Ελέγχει εάν οι Προσφέροντες υπέβαλαν όλα τα δικαιολογητικά και στοιχεία που απαιτούνται, σύμφωνα με την παράγραφο 13.4 του παρόντος τεύχους.

β. Ελέγχει εάν οι προσφορές περιέχουν αποκλίσεις από τους Εμπορικούς και Οικονομικούς Όρους των τευχών της Πρόσκλησης, για όσα στοιχεία περιλαμβάνονται σε αυτές. Σε περίπτωση διαπίστωσης αποκλίσεων τέτοιας φύσεως η προσφορά θα απορριφθεί οριστικά.
Ακολούθως το αποτέλεσμα του ως άνω ελέγχου ανακοινώνεται στους Προσφέροντες, σύμφωνα με τα αναφερόμενα στην πιο πάνω παράγραφο 15.1.3.
Οι Προσφέροντες των οποίων οι προσφορές απορρίπτονται, έχουν δικαίωμα υποβολής Αντιρρήσεων σύμφωνα με τα οριζόμενα στο άρθρο 16 του παρόντος τεύχους.

γ. Ελέγχει την ύπαρξη τυχόν σφαλμάτων και προβαίνει στη διόρθωσή τους, σύμφωνα με τα ρητώς προβλεπόμενα στο άρθρο 9 του παρόντος τεύχους.

δ. Προβαίνει στην οικονομική αξιολόγηση των οικονομικά αποδεκτών προσφορών με τη διαδικασία που έχει καθοριστεί στη Πρόσκληση και υπολογίζει το συνολικό οικονομικό αποτέλεσμα.

ε. Ελέγχει την ορθότητα του παραγόμενου μέσω του Συστήματος Πίνακα Προτιμητέων Προσφερόντων.

Επισημαίνεται ότι, σε περίπτωση που η αρμόδια Επιτροπή διαπιστώσει σε οποιαδήποτε εκ των οικονομικών προσφορών απόκλιση μεταξύ τιμών συμπληρωμένων από τους Προσφέροντες στην ειδική φόρμα του Συστήματος και της επισυναφθείσας σε αυτό ψηφιακά υπογεγραμμένης αντίστοιχης οικονομικής προσφοράς, επανακαταρτίζει τον Πίνακα Προτιμητέων Προσφερόντων με τις τιμές της ψηφιακά υπογεγραμμένης οικονομικής προσφοράς και αναρτά το διορθωμένο Συγκριτικό Πίνακα στο Σύστημα.

15.4.3 Το τίμημα της προσφοράς, όπως αυτό διαμορφώθηκε με τα αναφερόμενα στην παραπάνω παράγραφο 15.4.2, αποτελεί το συγκριτικό τίμημα της προσφοράς, με βάση το οποίο καθορίζεται η σειρά Προτιμητέων Προσφερόντων.
Σε περίπτωση ισότιμων προσφορών, διενεργείται κλήρωση βάσει της οποίας θα διαμορφωθεί η τελική σειρά μειοδοσίας. Η κλήρωση διενεργείται στα γραφεία της αρμόδιας Υπηρεσίας για τη Διαδικασία , μετά από σχετική έγκαιρη ειδοποίηση παρουσία εκπροσώπων των αποδεκτών μειοδοτών, εφόσον το επιθυμούν.

Ο ΦΠΑ που επιβάλλεται στην Ελλάδα επί των τιμολογίων που θα εκδοθούν από τον Προσφέροντα προς τη ΔΕΗ, δεν θα περιλαμβάνεται στο τίμημα και δεν λαμβάνεται υπόψη στη σύγκριση των προσφορών.

15.4.4 Η αρμόδια Επιτροπή, τέλος, συντάσσει και υπογράφει Πρακτικό Αξιολόγησης Προσφορών.

15.5 Αν μία προσφορά φαίνεται ασυνήθιστα χαμηλή σε σχέση με το αντικείμενό της, η ΔΕΗ ΑΕ θα απαιτήσει από τον Προσφέροντα να εξηγήσει, εντός αποκλειστικής προθεσμίας είκοσι (20) εργάσιμων ημερών από την κοινοποίηση της σχετικής πρόσκλησης, την τιμή που προτείνει στην προσφορά.

Οι εξηγήσεις μπορεί να αφορούν ιδίως:

α) τα οικονομικά χαρακτηριστικά της μεθόδου κατασκευής, της διαδικασίας παρασκευής ή των παρεχόμενων υπηρεσιών,
β) τις επιλεγείσες τεχνικές λύσεις ή τις εξαιρετικά ευνοϊκές συνθήκες, που διαθέτει ο Προσφέρων για την προμήθεια των προϊόντων ή την παροχή των υπηρεσιών ή για την εκτέλεση του έργου,
γ) την πρωτοτυπία του έργου, των προϊόντων ή των υπηρεσιών που προτείνονται από τον Προσφέροντα,
δ) τη συμμόρφωση προς τις υποχρεώσεις που απορρέουν από τις διατάξεις της περιβαλλοντικής, κοινωνικοασφαλιστικής και εργατικής νομοθεσίας, που έχουν θεσπισθεί με το δίκαιο της Ευρωπαϊκής Ένωσης, το εθνικό δίκαιο, συλλογικές συμβάσεις ή διεθνείς διατάξεις περιβαλλοντικού, κοινωνικού και εργατικού δικαίου,
ε) τη συμμόρφωση προς τις υποχρεώσεις του ως προς τους υπεργολάβους,

Αν ο Προσφέρων δεν ανταποκριθεί στη σχετική πρόσκληση της ΔΕΗ εντός της ως άνω προθεσμίας και δεν υποβάλλει εξηγήσεις, η προσφορά του απορρίπτεται ως μη κανονική και καταπίπτει υπέρ της ΔΕΗ η εγγυητική επιστολή συμμετοχής.
Η ΔΕΗ ΑΕ αξιολογεί τις παρεχόμενες πληροφορίες σε συνεννόηση με τον Προσφέροντα.
Η ΔΕΗ ΑΕ μπορεί να απορρίψει την προσφορά μόνο εάν τα παρεχόμενα στοιχεία δεν εξηγούν κατά τρόπο ικανοποιητικό το χαμηλό επίπεδο της τιμής που προτείνεται, λαμβανομένων υπόψη των στοιχείων που αναφέρονται ανωτέρω.
Η ΔΕΗ ΑΕ απορρίπτει την προσφορά, εάν διαπιστώσει ότι η προσφερόμενη τιμή είναι ασυνήθιστα χαμηλή λόγω μη συμμόρφωσης του Προσφέροντος σε υποχρεώσεις που επιβάλλονται από το δίκαιο για την προστασία του περιβάλλοντος, το εργατικό δίκαιο, το δίκαιο κοινωνικής ασφάλισης και προστασίας ευάλωτων κοινωνικών ομάδων, που επιβάλλονται από την εθνική ή ενωσιακή έννομη τάξη.

Άρθρο 16
Αντιρρήσεις Προσφερόντων

16.1 Κάθε ενδιαφερόμενος για σύναψη σύμβασης με τη ΔΕΗ, δικαιούται να υποβάλει Αντιρρήσεις σε κάθε απόφαση της Εταιρείας, που σχετίζεται με τη διαδικασία επιλογής, την οποία θεωρεί ότι θίγει, μη νόμιμα, τα συμφέροντά του.

16.2 Οι, κατά τα ανωτέρω, Αντιρρήσεις κατατίθενται ηλεκτρονικά μέσω του Συστήματος, στον ηλεκτρονικό τόπο της Διαδικασίας Επιλογής.
Η κατάθεση των Αντιρρήσεων γίνεται σε μορφή ηλεκτρονικού αρχείου .pdf ή αντίστοιχου με ονομασία αρχείου «Αντιρρήσεις». Οι Αντιρρήσεις πρέπει να φέρουν προηγμένη ηλεκτρονική υπογραφή σύμφωνα με την παράγραφο 1.4 του παρόντος τεύχους.
Το έγγραφο των Αντιρρήσεων πρέπει να είναι σαφές και ευσύνοπτο, σε καμία περίπτωση να μην ξεπερνά τις 1.500 λέξεις και να συνοδεύεται από τυχόν αναγκαία στοιχεία για την απόδειξη των ισχυρισμών που περιέχει. Εάν αφορά και στη συμμετοχή άλλου Προσφέροντος πρέπει να του κοινοποιείται ηλεκτρονικά εντός της ίδιας προθεσμίας. Εάν, κατά την κρίση της Επιτροπής Εξέτασης Αντιρρήσεων, από τις Αντιρρήσεις θίγεται τρίτος, στον οποίο δεν έχουν κοινοποιηθεί εντός της ως άνω προθεσμίας, την κοινοποίηση πρέπει να ενεργήσει η Επιτροπή.
Ως ημερομηνία υποβολής των Αντιρρήσεων θεωρείται η ημερομηνία ηλεκτρονικής καταχώρισής τους στον ηλεκτρονικό τόπο της Διαδικασίας.

16.3 Οι Αντιρρήσεις υποβάλλονται μέσα σε προθεσμία πέντε (5) ημερών από την ημερομηνία που η προσβαλλόμενη απόφαση περιήλθε σε γνώση του διαμαρτυρόμενου. Ειδικά για την υποβολή Αντιρρήσεων κατά της Πρόσκλησης, οι Αντιρρήσεις υποβάλλονται μέχρι πέντε (5) ημέρες πριν από την καταληκτική ημερομηνία υποβολής των προσφορών.

16.4 Τυχόν θιγόμενος από τις Αντιρρήσεις Προσφέρων δικαιούται να υποβάλει υπόμνημα, εντός αποκλειστικής προθεσμίας πέντε (5) ημερών από την κοινοποίηση σε αυτόν των Αντιρρήσεων, που πρέπει να πληρούν τις προϋποθέσεις του εγγράφου Αντιρρήσεων, προσκομίζοντας όλα τα κρίσιμα έγγραφα που έχει στη διάθεσή του. Η τυχόν υποβολή Αντιρρήσεων κατά απόφασης της Επιτροπής Εξέτασης Αντιρρήσεων επί Αντιρρήσεων άλλου Προσφέροντος δεν λαμβάνεται υπόψη από την αρμόδια Επιτροπή.

16.5 Η εξέταση των Αντιρρήσεων γίνεται από αρμόδια προς τούτο Επιτροπή, η οποία αποτελείται από τους:

- Διευθυντή Υλικού και Προμηθειών Εταιρικού Κέντρου και Εμπορίας
- Διευθυντή Διεύθυνσης Μελετών Κατασκευών ΘΗΕ
- Διευθυντή Διεύθυνσης Μελετών Κατασκευών ΥΗΕ

Η εξέταση των Αντιρρήσεων γίνεται εντός προθεσμίας 25 ημερών από την υποβολή τους. Μετά την παρέλευση της ανωτέρω προθεσμίας τεκμαίρεται η απόρριψη τους.

16.6 Η απόφαση της Επιτροπής γνωστοποιείται ηλεκτρονικά, μέσω του Συστήματος, ενώ ταυτόχρονα αποστέλλεται μέσω του Συστήματος σχετικό ηλεκτρονικό μήνυμα στον οικείο διαμαρτυρόμενο.

16.7 Η απόφαση επί των Αντιρρήσεων είναι ανέκκλητη και απρόσβλητη ενώπιον οργάνων της ΔΕΗ.

16.8 Η υποβολή Αντιρρήσεων δεν κωλύει αυτομάτως τη συνέχεια της Διαδικασίας Επιλογής και η τυχόν αποδοχή των Αντιρρήσεων δεν πλήττει το κύρος της Διαδικασίας Επιλογής, αλλά οδηγεί, κατά την κρίση του κρίνοντος οργάνου, σε αναμόρφωση του προσβαλλόμενου πρακτικού ή σε επανάληψη φάσης ή Σταδίου.

Άρθρο 17
Περάτωση διαδικασίας επιλογής – Αναγγελία Επιλογής Αντισυμβαλλομένου - Ματαίωση Διαδικασίας

17.1 Η Διαδικασία Επιλογής ολοκληρώνεται με την έγκριση του αποτελέσματός της από τα εξουσιοδοτημένα όργανα της Εταιρείας. Η εγκριτική απόφαση περιλαμβάνει και τυχόν βελτιώσεις της προσφοράς που γίνονται δεκτές από τον Προτιμητέο Προσφέροντα.

17.2 Η επιλογή Αντισυμβαλλομένου γνωστοποιείται ηλεκτρονικά, μέσω του Συστήματος στον Αντισυμβαλλόμενο με επιστολή με την οποία καλείται να προσκομίσει, όλα τα απαραίτητα στοιχεία και πιστοποιητικά που προβλέπονται από την Πρόσκληση.

Ταυτόχρονα η ως άνω επιλογή αναγγέλλεται ηλεκτρονικά, μέσω του Συστήματος και στους λοιπούς Προσφέροντες οι οποίοι υπέβαλαν αποδεκτές προσφορές.

17.3 Σε περίπτωση σύμπραξης/ένωσης προσώπων θα επιλεχθούν ως Αντισυμβαλλόμενα μέρη όλα τα μέλη αυτής και θα τεθεί διάταξη στο συμφωνητικό σύμφωνα με την οποία τα μέλη της ενέχονται και ευθύνονται έναντι της ΔΕΗ ενιαία, αδιαίρετα, αλληλέγγυα και σε ολόκληρο το καθένα χωριστά, θα εκπροσωπούνται από κοινό εκπρόσωπο και ότι θα ελέγχεται από τη ΔΕΗ η ουσιαστική συμμετοχή στη σύμπραξη/ένωση όλων των μελών της σε όλη τη διάρκεια ισχύος της σύμβασης.

17.4 Σε περίπτωση σύμπραξης/ένωσης προσώπων η προσφορά πρέπει να είναι διαμορφωμένη κατά τρόπο ώστε να εξασφαλίζεται η χωριστή τιμολόγηση από τα μέλη της σύμπραξης/ένωσης σύμφωνα με την ελληνική φορολογική νομοθεσία και πρακτική. Στην αντίθετη περίπτωση η σύμπραξη/ένωση προσώπων υποχρεούται πριν την υπογραφή της σύμβασης να περιβληθεί νομικό τύπο που θα επιτρέπει την από κοινού τιμολόγηση και τότε για την υπογραφή της σύμβασης απαιτείται επιπλέον η κατάθεση επικυρωμένου αντιγράφου του εγγράφου που θα αποδεικνύει ότι ικανοποιείται η προαναφερθείσα απαίτηση.

17.5 Η ΔΕΗ διατηρεί το δικαίωμα, με αιτιολογημένη απόφαση των αρμοδίων οργάνων της, να ματαιώσει τη Διαδικασία Επιλογής στο σύνολο ή σε μέρος αυτής, ή να την επαναλάβει με τους ίδιους ή διαφορετικούς όρους σε οποιαδήποτε φάση της Διαδικασίας και κατά την απόλυτη κρίση της.

17.6 <u>Η ΔΕΗ ματαιώνει τη διαδικασία, ιδίως εφόσον</u>:

α. απέβη άγονη λόγω μη υποβολής προσφοράς ή λόγω απόρριψης όλων των προσφορών ή αποκλεισμού όλων των Προσφερόντων

β. κανένας από τους Προσφέροντες δεν προσέλθει για την υπογραφή της σύμβασης.

γ. διεξήχθη χωρίς τήρηση των προβλεπομένων κανόνων, με συνέπεια τον επηρεασμό του αποτελέσματος

δ. το αποτέλεσμα είναι μη ικανοποιητικό για την Εταιρεία

ε. ο ανταγωνισμός υπήρξε ανεπαρκής

στ. μεταβλήθηκαν οι ανάγκες της Εταιρείας

ζ. δεν θα είναι δυνατή η κανονική εκτέλεση της σύμβασης, λόγω ανωτέρας βίας

Άρθρο 18
Περιεχόμενο και υπογραφή Σύμβασης

18.1 Το περιεχόμενο της Σύμβασης διαμορφώνεται με βάση τους όρους της Πρόσκλησης και της προσφοράς του Αντισυμβαλλομένου, όπως εγκρίθηκαν από το αρμόδιο όργανο της Εταιρείας.

18.2 Παράλληλα ο Προτιμητέος Προσφέρων καλείται από τη ΔΕΗ να προσκομίσει εντός δέκα (10) ημερών από την ημερομηνία της σχετικής πρόσκλησης, την εγγυητική επιστολή καλής εκτέλεσης και σε περίπτωση νομικού προσώπου, την απόφαση ορισμού εκπροσώπου για την υπογραφή της Σύμβασης.
Αναφορικά με το χρόνο ισχύος των δικαιολογητικών και στοιχείων που καλείται να προσκομίσει ο Προτιμητέος Προσφέρων, καθώς και για τις λοιπές ρυθμίσεις που διέπουν την υποβολή τους, ισχύουν τα διαλαμβανόμενα στις παραγράφους 13.1.1.4 και 13.2.Β του παρόντος τεύχους.

18.3 Μετά την διαμόρφωση του περιεχομένου της Σύμβασης και την προσκόμιση των πιο πάνω δικαιολογητικών, ο Προτιμητέος Προσφέρων καλείται για την υπογραφή της εντός προθεσμίας η οποία δεν μπορεί να είναι μικρότερη των δέκα (10) ημερολογιακών ημερών από τη γνωστοποίηση μέσω του Συστήματος της απόφασης επιλογής.

18.4 Εάν αυτός δεν προσέλθει εντός της ως άνω προθεσμίας, η Εταιρεία έχει το δικαίωμα να τον αποκλείσει από την υπογραφή της Σύμβασης και να ζητήσει την κατάπτωση της Εγγυητικής Επιστολής Συμμετοχής του στη Διαδικασία, ακολούθως δε να προχωρήσει σε συζητήσεις με τους λοιπούς Προσφέροντες κατά σειρά Προτιμητέων Προσφερόντων για επιλογή Αντισυμβαλλομένου, υπό την προϋπόθεση ότι ισχύουν ή δέχονται να ισχύουν οι προσφορές τους.

Άρθρο 19
Επιφυλάξεις και Δικαιώματα ΔΕΗ

19.1 Η συμμετοχή στη διαδικασία (υποβολή προσφοράς) ισοδυναμεί με δήλωση του προσφέροντος ότι έλαβε πλήρη γνώση όλων των όρων, των στοιχείων και των τευχών της Πρόσκλησης.

19.2 Η ΔΕΗ διατηρεί το δικαίωμα να μεταθέσει την ημερομηνία υποβολής των προσφορών ή να επιφέρει οποιεσδήποτε τροποποιήσεις στα τεύχη της Πρόσκλησης. Οι τροποποιήσεις αυτές θα περιλαμβάνονται σε σχετικά Συμπληρώματα της Πρόσκλησης, η έκδοση των οποίων θα δημοσιεύεται όπως και η Πρόσκληση.

19.3 Η ΔΕΗ δεν θα έχει ευθύνη ή υποχρέωση, σε καμία περίπτωση, να αποζημιώσει τους Προσφέροντες για οποιαδήποτε δαπάνη ή ζημιά που θα έχουν υποστεί για την προετοιμασία και υποβολή των Προσφορών τους, ιδιαίτερα στην περίπτωση που αυτές δεν θα γίνουν δεκτές ή θ' αναβληθεί ή ματαιωθεί η διαδικασία σε οποιοδήποτε φάση και χρόνο και για οποιοδήποτε λόγο ή αιτία. Κατά συνέπεια αυτοί που συμμετέχουν στη διαδικασία και υποβάλλουν προσφορά, ανεξάρτητα αν έγιναν ή όχι τελικά δεκτοί, δεν αποκτούν κανένα απολύτως δικαίωμα κατά της ΔΕΗ από την Πρόσκληση αυτή και την εν γένει συμμετοχή τους στη Διαδικασία Επιλογής.

19.4 Η προσφορά, η οποία υποβάλλεται με βάση τους όρους της Πρόσκλησης, θεωρείται ως πρόταση προς τη ΔΕΗ και όχι ως αποδοχή πρότασής της.

19.5 Κάθε παράλειψη στην υποβολή της Προσφοράς ή στην υπογραφή οποιουδήποτε εγγράφου, δεν δίνει το δικαίωμα σε Προσφέροντα να την επικαλεστεί προκειμένου να τύχει εξαιρέσεως ή ελαττώσεως των υποχρεώσεών του.

19.6 Οι όροι και οι περιορισμοί που αφορούν στην υποβολή των Προσφορών είναι προς όφελος της ΔΕΗ, η οποία δικαιούται, πριν από την υποβολή των προσφορών, να παραιτηθεί απ' αυτούς, χωρίς αυτό να δημιουργεί κανένα δικαίωμα στους Προσφέροντες ή σε άλλους τρίτους.

Συνημμένα:
- Παραρτήματα Ι έως ΙΙΙ

Υποστηρικτικές Λειτουργίες

Διεύθυνση Προμηθειών Λειτουργιών Παραγωγής

Αριθμός Πρόσκλησης : **ΔΠΛΠ 1668**

Αντικείμενο: «Μηχανουργική υποστήριξη συντήρησης συγκροτημάτων μέσης ισχύος μονάδας V ΑΗΣ Κερατέας-Λαυρίου»

ΠΑΡΑΡΤΗΜΑΤΑ I-III

ΤΕΥΧΟΥΣ 1

Υποστηρικτικές Λειτουργίες **Διεύθυνση Προμηθειών Λειτουργιών Παραγωγής**

Αρ.Πρόσκλησης ΔΠΛΠ 1668

Παράρτημα Ια

Τιμολόγιο Προσφοράς

ΑΝΤΙΚΕΙΜΕΝΟ: " Μηχανουργική Υποστήριξη Συντήρησης Συγκροτημάτων μέσης ισχύος Μονάδας V ΑΗΣ Κερατέας- Λαυρίου"

Α/Α	ΠΕΡΙΓΡΑΦΗ ΕΡΓΑΣΙΩΝ	ΑΡΘΡΟ ΤΕΧΝΙΚΗΣ ΠΡΟΔΙΑΓΡΑΦΗΣ	ΜΟΝΑΔΑ ΜΕΤΡΗΣΗΣ	ΤΙΜΗ ΜΟΝΑΔΑΣ (ΑΡΙΘΜΗΤΙΚΩΣ) €	ΤΙΜΗ ΜΟΝΑΔΑΣ (ΟΛΟΓΡΑΦΩΣ) €
Α	**ΣΥΝΤΗΡΗΣΗ ΤΡΟΦΟΔΟΤΙΚΗΣ ΑΝΤΛΙΑΣ Υ.Π. 6Χ14WXH10**				
Α.1	**ΜΕΤΑΦΟΡΕΣ**				
Α.1.1.	Μεταφορά αντλίας από ΑΗΣ Κ-Λ προς τις εγκαταστάσεις του Αναδόχου και το αντίθετο δρομολόγιο	2.1.1	ΚΑΤΆ ΑΠΟΚΟΠΗ		
Α.1.2	Μεταφορά Κινητήρα αντλίας από ΑΗΣ Κ-Λ προς τις εγκαταστάσεις του Αναδόχου και το αντίθετο δρομολόγιο	2.1.1	ΚΑΤΆ ΑΠΟΚΟΠΗ		
Α.2	**ΑΠΟΣΥΝΑΡΜΟΛΟΓΗΣΗ-ΣΥΝΑΡΜΟΛΟΓΗΣΗ ΑΝΤΛΙΑΣ**	2.1.2 και 2.1.4	ΚΑΤΆ ΑΠΟΚΟΠΗ		
Α.3	**ΑΠΟΣΥΝΑΡΜΟΛΟΓΗΣΗ-ΣΥΝΑΡΜΟΛΟΓΗΣΗ ΚΙΝΗΤΗΡΑ ΑΝΤΛΙΑΣ**	2.1.6	ΚΑΤΆ ΑΠΟΚΟΠΗ		
Α.4	**ΓΕΝΙΚΕΣ ΕΡΓΑΣΙΕΣ**				
Α.4.1	Αμμοβολή καθαρισμός εξαρτημάτων	2.1.3.1.Α	ΚΑΤΆ ΑΠΟΚΟΠΗ		
Α.4.2	Μηχανουργικές μετρήσεις μελέτη σχεδιασμού εξαρτημάτων Παράδοση κατασκευαστικών σχεδίων	2.1.3.1.Β	ΚΑΤΆ ΑΠΟΚΟΠΗ		
Α.4.3.	Εκτέλεση ΜΚΕ	2.1.3.1.Γ	ΚΑΤΆ ΑΠΟΚΟΠΗ		
Α.4.4	Ζυγοστάθμιση πτερωτών	2.1.3.2.β	ΕΞΑΡΤΗΜΑ		
Α.4.5	Έλεγχος παραμόρφωσης άξονα	2.1.3.2.ε	ΑΞΟΝΑΣ		
Α.4.6	Υδροστατική δοκιμή αντλίας	2.1.5	ΚΑΤΆ ΑΠΟΚΟΠΗ		
Α.4.7	Τεχνική έκθεση αντλίας	2.1.5	ΚΑΤΆ ΑΠΟΚΟΠΗ		

Α/Α	ΠΕΡΙΓΡΑΦΗ ΕΡΓΑΣΙΩΝ	ΑΡΘΡΟ ΤΕΧΝΙΚΗΣ ΠΡΟΔΙΑΓΡΑΦΗΣ	ΜΟΝΑΔΑ ΜΕΤΡΗΣΗΣ	ΤΙΜΗ ΜΟΝΑΔΑΣ (ΑΡΙΘΜΗΤΙΚΩΣ) €	ΤΙΜΗ ΜΟΝΑΔΑΣ (ΟΛΟΓΡΑΦΩΣ) €
Α.5	**ΕΡΓΑΣΙΕΣ ΕΠΙΣΚΕΥΗΣ ΚΥΡΙΩΝ ΕΞΑΡΤΗΜΑΤΩΝ**				
Α.5.1	**ΛΕΙΑΝΣΕΙΣ ΕΠΙΦΑΝΕΙΩΝ ΣΤΕΓΑΝΟΠΟΙΗΣΗΣ**				
Α.5.1.1	Λείανση επιφανειών στεγανοποίησης εξαρτήματος 1150.1 και 2	2.1.3.2.α.1	ΩΡΕΣ ΧΡΗΣΗΣ ΕΡΓΑΛΕΙΟΜΗΧΑΝΗΣ		
Α.5.1.2	Λείανση επιφανειών στεγανοποίησης κελύφους αναρρόφησης 1910	2.1.3.2.α.3 και α.4	ΩΡΕΣ ΧΡΗΣΗΣ ΕΡΓΑΛΕΙΟΜΗΧΑΝΗΣ		
Α.5.1.3	Λείανση επιφανειών σπειροειδούς κελύφους αναρρόφησης 1130.1 και 2	2.1.3.2.α.5	ΩΡΕΣ ΧΡΗΣΗΣ ΕΡΓΑΛΕΙΟΜΗΧΑΝΗΣ		
Α.5.1.4	Λείανση επιφανειών σπειροειδούς κελύφους κατάθλιψης 1140	2.1.3.2.α.9	ΩΡΕΣ ΧΡΗΣΗΣ ΕΡΓΑΛΕΙΟΜΗΧΑΝΗΣ		
Α.5.1.5	Λείανση επιφανειών οδηγητικών πτερυγίων 1410.1,2 και 3	2.1.3.2.α.6	ΩΡΕΣ ΧΡΗΣΗΣ ΕΡΓΑΛΕΙΟΜΗΧΑΝΗΣ		
Α.5.1.6	Λείανση επιφανειών στεγανοποίησης πτερωτής διπλής αναρρόφησης 2200.1	2.1.3.2.β	ΩΡΕΣ ΧΡΗΣΗΣ ΕΡΓΑΛΕΙΟΜΗΧΑΝΗΣ		
Α.5.1.7	Λείναση επιφανειών στεγανοποίησης πτερωτών 2200.2,3	2.1.3.2.β	ΩΡΕΣ ΧΡΗΣΗΣ ΕΡΓΑΛΕΙΟΜΗΧΑΝΗΣ		
Α.5.1.8	Λείανση επιφανειών στεγανοποίησης ωστικού κολλάρου	2.1.3.2.γ	ΩΡΕΣ ΧΡΗΣΗΣ ΕΡΓΑΛΕΙΟΜΗΧΑΝΗΣ		
Α.5.1.9	Λείανση επιφανειών δίσκων εξισορρόπησης	2.1.3.2.δ	ΩΡΕΣ ΧΡΗΣΗΣ ΕΡΓΑΛΕΙΟΜΗΧΑΝΗΣ		
Α.5.1.10	Λειάνση επιφανειών άξονα (κονμβία,χιτώνια προστασίας	2.1.3.2.ε	ΩΡΕΣ ΧΡΗΣΗΣ ΕΡΓΑΛΕΙΟΜΗΧΑΝΗΣ		
Α.5.2	**ΑΝΑΓΟΜΩΣΕΙΣ ΦΘΟΡΩΝ ΚΑΙ ΤΕΛΙΚΗ ΚΑΤΕΡΓΑΣΙΑ ΣΕ ΟΝΟΜΑΣΤΙΚΕΣ ΔΙΑΣΤΑΣΕΙΣ**				
Α.5.2.1	Αναγόμωση σταθερών δακτυλίων στεγανοποίησης 1500.1 για πάχη αναγόμωσης έως 0,5mm	2.1.3.2.α.5	ΕΞΑΡΤΗΜΑ		
Α.5.2.2	Μηχανουργική κατεργασία σταθερού δακτυλίου 1500.1 στη τελική του διάσταση	2.1.3.2.α.5	ΩΡΕΣ ΧΡΗΣΗΣ ΕΡΓΑΛΕΙΟΜΗΧΑΝΗΣ		
Α.5.2.3	Αναγόμωση σταθερών δακτυλίων στεγανοποίησης 1500.2 έως και 1500.4 για πάχη αναγόμωσης έως 0,5mm	2.1.3.2.α.5	ΕΞΑΡΤΗΜΑ		
Α.5.2.4	Μηχανουργική κατεργασία σταθερών δακτυλίων 1500.2 έως και 4 στη τελική τους διάσταση	2.1.3.2.α.5	ΩΡΕΣ ΧΡΗΣΗΣ ΕΡΓΑΛΕΙΟΜΗΧΑΝΗΣ		
Α.5.2.5	Αναγόμωση επιφανειών στεγανοποίησης κελυφών 1150.1,2 με οδηγητικά πτερύγια 1140.2 για πάχη αναγόμωσης έως 0,5mm	2.1.3.2.α7	ΕΞΑΡΤΗΜΑ		
Α.5.2.6	Μηχανουργική κατεργασία κελυφών 1150	2.1.3.2.α7	ΩΡΕΣ ΧΡΗΣΗΣ ΕΡΓΑΛΕΙΟΜΗΧΑΝΗΣ		
Α.5.2.7	Αναγόμωση επιφανειών στεγανοποίησης κελυφών 1910 με οδηγητικά πτερύγια 1160 για πάχη αναγόμωσης έως 0,5mm	2.1.3.2.α4	ΕΞΑΡΤΗΜΑ		

Α/Α	ΠΕΡΙΓΡΑΦΗ ΕΡΓΑΣΙΩΝ	ΑΡΘΡΟ ΤΕΧΝΙΚΗΣ ΠΡΟΔΙΑΓΡΑΦΗΣ	ΜΟΝΑΔΑ ΜΕΤΡΗΣΗΣ	ΤΙΜΗ ΜΟΝΑΔΑΣ (ΑΡΙΘΜΗΤΙΚΩΣ) €	ΤΙΜΗ ΜΟΝΑΔΑΣ (ΟΛΟΓΡΑΦΩΣ) €
Α.5.2.8	Μηχανουργική κατεργασία κελύφους 1910	2.1.3.2.α4	ΩΡΕΣ ΧΡΗΣΗΣ ΕΡΓΑΛΕΙΟΜΗΧΑΝΗΣ		
Α.5.2.5	Αναγόμωση με λευκό μέταλλο ακτινικών κουζινέτων 3300 και τελική κατεργασία	2.1.3.2.γ2	ΚΑΤΆ ΑΠΟΚΟΠΗ		
Α.5.2.6	Αναγόμωση με λευκό μέταλλο δακτυλίων στεγανοποίησης εδράνων και τελική κατεργασία	2.1.3.2.γ3	ΚΑΤΆ ΑΠΟΚΟΠΗ		
Α.5.3	**ΚΑΤΑΣΚΕΥΕΣ ΕΞΑΡΤΗΜΑΤΩΝ**				
Α.5.3.1	Κατασκευή κοχλία-περικοχλίου-ασφάλειας (tie rod,nut,washer) 6571,6580,2905	2.1.4	SET ΚΟΧΛΙΑ-ΠΑΞΙΜΑΔΙ-ΑΣΦΑΛΕΙΑ		
Α.5.3.2	Κατασκευές από ανοξείδωτο χάλυβα (σφήνες, πείροι,μικρουλικά λυόμενων συνδέσεων)	2.1.4	kg		
Α.5.3.3	Κατασκευές από χάλυβα κατασκευών (πείροι,κοχλίες)	2.1.4	kg		
Α.6	**ΕΡΓΑΣΙΕΣ ΕΠΙΘΕΩΡΗΣΗΣ ΚΙΝΗΤΗΡΑ**				
Α.6.1	Ηλεκτρικές μετρήσεις τυλίγματος και πυρήνα στάτη	2.1.6.1	ΚΑΤΆ ΑΠΟΚΟΠΗ		
Α.6.2	ΜΚΕ μπαρών βραχυκυκλωμένου κλωβού	2.1.6.2	ΚΑΤΆ ΑΠΟΚΟΠΗ		
Α.6.3	ΜΚΕ δακτυλίων βραχυκύκλώσης κλωβού ρότορα	2.1.6.2	ΚΑΤΆ ΑΠΟΚΟΠΗ		
Α.6.4	Ηλεκτρικές μετρήσεις ρότορα	2.1.6.2	ΚΑΤΆ ΑΠΟΚΟΠΗ		
Α.6.5	Αναγομώσεις με λευκό μέταλλο κουζινέτων κινητήρα	2.1.6.3	κουζινετο		
Α.6.6	Καθαρισμός με υδροβολή των ψυγείων νερού αέρος	2.1.,6.4	ΚΑΤΆ ΑΠΟΚΟΠΗ		
Α.6.7	Καθαρισμός με ξηρό πάγο τυλιγμάτων στάτη	2.1.6.1	ΚΑΤΆ ΑΠΟΚΟΠΗ		
Β	**ΣΥΝΤΗΡΗΣΗ ΤΡΟΦΟΔΟΤΙΚΗΣ ΑΝΤΛΙΑΣ Μ.Π. 3Χ11WXH5**				
Β.1	**ΜΕΤΑΦΟΡΕΣ**				
Β.1.1	Μεταφορά αντλίας από ΑΗΣ Κ-Λ προς τις εγκαταστάσεις του Αναδόχου και το αντίθετο δρομολόγιο	2.2.1	ΚΑΤΆ ΑΠΟΚΟΠΗ		
Β.1.2	Μεταφορά Κινητήρα αντλίας από ΑΗΣ Κ-Λ προς τις εγκαταστάσεις του Αναδόχου και το αντίθετο δρομολόγιο	2.2.1	ΚΑΤΆ ΑΠΟΚΟΠΗ		

Α/Α	ΠΕΡΙΓΡΑΦΗ ΕΡΓΑΣΙΩΝ	ΑΡΘΡΟ ΤΕΧΝΙΚΗΣ ΠΡΟΔΙΑΓΡΑΦΗΣ	ΜΟΝΑΔΑ ΜΕΤΡΗΣΗΣ	ΤΙΜΗ ΜΟΝΑΔΑΣ (ΑΡΙΘΜΗΤΙΚΩΣ) €	ΤΙΜΗ ΜΟΝΑΔΑΣ (ΟΛΟΓΡΑΦΩΣ) €
Β.2	**ΑΠΟΣΥΝΑΡΜΟΛΟΓΗΣΗ-ΣΥΝΑΡΜΟΛΟΓΗΣΗ ΑΝΤΛΙΑΣ**	2.2.2 και 2.1.4	ΑΝΤΛΙΑ		
Β.3	**ΑΠΟΣΥΝΑΡΜΟΛΟΓΗΣΗ-ΣΥΝΑΡΜΟΛΟΓΗΣΗ ΚΙΝΗΤΗΡΑ ΑΝΤΛΙΑΣ**	2.2.6	ΚΙΝΗΤΗΡΑ		
Β.4	**ΓΕΝΙΚΕΣ ΕΡΓΑΣΙΕΣ**				
Β.4.1	Αμμοβολή καθαρισμός εξαρτημάτων	2.2.3.1.Α	ΚΑΤΆ ΑΠΟΚΟΠΗ		
Β.4.2	Μηχανουργικές μετρήσεις μελέτη σχεδιασμού εξαρτημάτων και παράδοση κατασκευαστικών σχεδίων	2.2.3.1.Β	ΚΑΤΆ ΑΠΟΚΟΠΗ		
Β.4.3	Εκτέλεση ΜΚΕ	2.2.3.1.Γ	ΚΑΤΆ ΑΠΟΚΟΠΗ		
Β.4.4	Ζυγοστάθμιση πτερωτών	2.2.3.2.β	ΕΞΑΡΤΗΜΑ		
Β.4.5	Έλεγχος παραμόρφωσης άξονα	2.2.3.2.δ	ΑΞΟΝΑΣ		
Β.4.6	Υδροστατική δοκιμή αντλίας	2.2.5	ΚΑΤΆ ΑΠΟΚΟΠΗ		
Β.4.7	Τεχνική έκθεση αντλίας	2.2.5	ΚΑΤΆ ΑΠΟΚΟΠΗ		
Β.5.1	**ΛΕΙΑΝΣΕΙΣ ΕΠΙΦΑΝΕΙΩΝ ΣΤΕΓΑΝΟΠΟΙΗΣΗΣ**				
Β.5.1	Λείανση επιφανειών στεγανοποίησης εξαρτήματος 1150.1 και 2	2.1.3.2.α.1	ΩΡΕΣ ΧΡΗΣΗΣ ΕΡΓΑΛΕΙΟΜΗΧΑΝΗΣ		
Β.5.2	Λείανση επιφανειών σπειροειδούς κελύφους αναρρόφησης 1130	2.1.3.2.α.5	ΩΡΕΣ ΧΡΗΣΗΣ ΕΡΓΑΛΕΙΟΜΗΧΑΝΗΣ		
Β.5.3	Λείανση επιφανειών σπειροειδούς κελύφους κατάθλιψης 1140	2.1.3.2.α.9	ΩΡΕΣ ΧΡΗΣΗΣ ΕΡΓΑΛΕΙΟΜΗΧΑΝΗΣ		
Β.5.4	Λείανση επιφανειών οδηγητικών πτερυγίων 1410.1,2	2.1.3.2.α.6	ΩΡΕΣ ΧΡΗΣΗΣ ΕΡΓΑΛΕΙΟΜΗΧΑΝΗΣ		
Β.5.5	Λείναση επιφανειών στεγανοποίησης πτερωτών 2200.2,3	2.1.3.2.β	ΩΡΕΣ ΧΡΗΣΗΣ ΕΡΓΑΛΕΙΟΜΗΧΑΝΗΣ		
Β.5.6	Λείανση επιφανειών δίσκων εξισορρόπησης	2.1.3.2.δ	ΩΡΕΣ ΧΡΗΣΗΣ ΕΡΓΑΛΕΙΟΜΗΧΑΝΗΣ		
Β.5.7	Λειάνση επιφανειών άξονα (κονμβία,χιτώνια προστασίας	2.1.3.2.ε	ΩΡΕΣ ΧΡΗΣΗΣ ΕΡΓΑΛΕΙΟΜΗΧΑΝΗΣ		
Β.5.2	**ΑΝΑΓΟΜΩΣΕΙΣ ΦΘΟΡΩΝ ΚΑΙ ΤΕΛΙΚΗ ΚΑΤΕΡΓΑΣΙΑ ΣΕ ΟΝΟΜΑΣΤΙΚΕΣ ΔΙΑΣΤΑΣΕΙΣ**				
Β.5.2.1	Αναγόμωση σταθερών δακτυλίων στεγανοποίησης 1500.1,2 για πάχη αναγόμωσης έως 0,5mm	2.2.3.2.α4	ΕΞΑΡΤΗΜΑ		
Β.5.2.2	Μηχανουργική κατεργασία αναγομωμένων επιφανεριών δακτυλίων στεγανοποίησης 1500.1,2	2.1.3.2.α4	ΩΡΕΣ ΧΡΗΣΗΣ ΕΡΓΑΛΕΙΟΜΗΧΑΝΗΣ		

Α/Α	ΠΕΡΙΓΡΑΦΗ ΕΡΓΑΣΙΩΝ	ΑΡΘΡΟ ΤΕΧΝΙΚΗΣ ΠΡΟΔΙΑΓΡΑΦΗΣ	ΜΟΝΑΔΑ ΜΕΤΡΗΣΗΣ	ΤΙΜΗ ΜΟΝΑΔΑΣ (ΑΡΙΘΜΗΤΙΚΩΣ) €	ΤΙΜΗ ΜΟΝΑΔΑΣ (ΟΛΟΓΡΑΦΩΣ) €
Β.5.2.3	Αναγόμωση επιφανειών στεγανοποίησης κελυφών 1150.1,2 με οδηγητικά πτερύγια 1140.2 για πάχη αναγόμωσης έως 0,5mm	2.2.3.2.α4	ΕΞΑΡΤΗΜΑ		
Β.5.2.4	Μηχανουργική κατεργασία αναγομωμένων επιφανειών κελυφών 1150.1 ,2	2.2.3.2.α	ΩΡΕΣ ΧΡΗΣΗΣ ΕΡΓΑΛΕΙΟΜΗΧΑΝΗΣ		
Β.5.3	**ΚΑΤΑΣΚΕΥΕΣ ΕΞΑΡΤΗΜΑΤΩΝ**				
Β.5.3.1	Κατασκευή κοχλία-περικοχλίου-ασφάλειας (tie rod,nut,washer) 6571,6580,2905	2.1.4	SET ΚΟΧΛΙΑ-ΠΑΞΙΜΑΔΙ-ΑΣΦΑΛΕΙΑ		
Β.5.3.2	Κατασκευές από ανοξείδωτο χάλυβα (πείροι,μικρουλικά λυόμενων συνδέσεων)	2.1.4	kg		
Β.6	**ΕΡΓΑΣΙΕΣ ΕΠΙΘΕΩΡΗΣΗΣ ΚΙΝΗΤΗΡΑ**				
Β.6.1	Ηλεκτρικές μετρήσεις τυλίγματος και πυρήνα στάτη	2.1.6.1	ΚΑΤΆ ΑΠΟΚΟΠΗ		
Β.6.2	ΜΚΕ μπαρών βραχυκυκλωμένου κλωβού	2.1.6.2	ΚΑΤΆ ΑΠΟΚΟΠΗ		
Β.6.3	ΜΚΕ δακτυλίων βραχυκύκλώσης κλωβού ρότορα	2.1.6.2	ΚΑΤΆ ΑΠΟΚΟΠΗ		
Β.6.4	Ηλεκτρικές μετρήσεις ρότορα	2.1.6.2	ΚΑΤΆ ΑΠΟΚΟΠΗ		
Β.6.5	Καθαρισμός με ξηρό πάγο τυλιγμάτων στάτη	2.1.6.1	ΚΑΤΆ ΑΠΟΚΟΠΗ		
Γ	**ΣΥΝΤΗΡΗΣΗ ΑΝΤΛΙΑΣ ΣΥΜΠΥΚΝΩΜΑΤΟΣ**				
Γ.1	**ΜΕΤΑΦΟΡΕΣ**				
Γ.1.1.	Μεταφορά αντλίας από ΑΗΣ Κ-Λ προς τις εγκαταστάσεις του Αναδόχου και το αντίθετο δρομολόγιο	2.4.1	ΚΑΤΆ ΑΠΟΚΟΠΗ		
Γ.1.2	Μεταφορά Κινητήρα αντλίας από ΑΗΣ Κ-Λ προς τις εγκαταστάσεις του Αναδόχου και το αντίθετο δρομολόγιο	2.4.1	ΚΑΤΆ ΑΠΟΚΟΠΗ		
Γ.2	**ΑΠΟΣΥΝΑΡΜΟΛΟΓΗΣΗ-ΣΥΝΑΡΜΟΛΟΓΗΣΗ ΑΝΤΛΙΑΣ**	2.4.2 & 2.4.4	ΚΑΤΆ ΑΠΟΚΟΠΗ		
Γ.3	**ΑΠΟΣΥΝΑΡΜΟΛΟΓΗΣΗ-ΣΥΝΑΡΜΟΛΟΓΗΣΗ ΚΙΝΗΤΗΡΑ ΑΝΤΛΙΑΣ**	2.4.5	ΚΑΤΆ ΑΠΟΚΟΠΗ		
Γ.4	**ΓΕΝΙΚΕΣ ΕΡΓΑΣΙΕΣ**				
Γ.4.1	Αμμοβολή καθαρισμός εξαρτημάτων	2.4.3.1	ΚΑΤΆ ΑΠΟΚΟΠΗ		
Γ.4.2	Μηχανουργικές μετρήσεις μελέτη σχεδιασμού εξαρτημάτων Παράδοση κατασκευαστικών σχεδίων	2.4.3.1.Β	ΚΑΤΆ ΑΠΟΚΟΠΗ		

Α/Α	ΠΕΡΙΓΡΑΦΗ ΕΡΓΑΣΙΩΝ	ΑΡΘΡΟ ΤΕΧΝΙΚΗΣ ΠΡΟΔΙΑΓΡΑΦΗΣ	ΜΟΝΑΔΑ ΜΕΤΡΗΣΗΣ	ΤΙΜΗ ΜΟΝΑΔΑΣ (ΑΡΙΘΜΗΤΙΚΩΣ) €	ΤΙΜΗ ΜΟΝΑΔΑΣ (ΟΛΟΓΡΑΦΩΣ) €
Γ.4.3	Εκτέλεση ΜΚΕ	2.4.3.1.Α	ΚΑΤΆ ΑΠΟΚΟΠΗ		
Γ.4.4	Ζυγοστάθμιση πτερωτών	2.4	ΕΞΑΡΤΗΜΑ		
Γ.4.5	Έλεγχος παραμόρφωσης άξονα	2.4.3.2.α	ΑΞΟΝΑΣ		
Γ.4.6	Τεχνική έκθεση αντλίας	2.4	ΚΑΤΆ ΑΠΟΚΟΠΗ		
Γ.5	**ΕΡΓΑΣΙΕΣ ΕΠΙΣΚΕΥΗΣ ΚΥΡΙΩΝ ΕΞΑΡΤΗΜΑΤΩΝ**				
Γ.5.1	**ΛΕΙΑΝΣΕΙΣ ΕΠΙΦΑΝΕΙΩΝ ΣΤΕΓΑΝΟΠΟΙΗΣΗΣ**				
Γ.5.1.1	Λείανση επιφανειών στεγανοποίησης κελυφών και οδηγητικών σωλήνων	2.4.3.2.δ	ΩΡΕΣ ΧΡΗΣΗΣ ΕΡΓΑΛΕΙΟΜΗΧΑΝΗΣ		
Γ.5.1.2	Λείανση γλαντζών στομίου κατάθλιψης	2.4.3.2.ε	ΩΡΕΣ ΧΡΗΣΗΣ ΕΡΓΑΛΕΙΟΜΗΧΑΝΗΣ		
Γ.5.2	**ΕΠΙΣΚΕΥΕΣ ΕΞΑΡΤΗΜΑΤΩΝ**				
Γ.5.2.1	Αντικατάσταση δακτυλίων φθοράς οδηγητικών πτερυγίων	2.4.3.2.γ	ΔΑΚΤΥΛΙΟ		
Γ.5.2.2	Αντικατάσταση αντιτριβικού υλικού κουζινέτων	2.4.3.2.β	ΚΟΥΖΙΝΕΤΟ		
Γ.5.2.3	Αποκατάσταση παραμορφωμένου άξονα	2.4.3.2.α	ΑΞΟΝΑΣ		
Γ.5.3	**ΚΑΤΑΣΚΕΥΕΣ ΕΞΑΡΤΗΜΑΤΩΝ**				
Γ.5.3.1	Κατασκευή κόμπλερ αντλίας (Λεπτομέρεια C σχεδίου)	2.4	ΚΟΜΠΛΕΡ		
Γ.5,.3.2	Κατασκευές από ανοξείδωτο χάλυβα (πείροι,μικρουλικά λυόμενων συνδέσεων)	2.4.3.2.στ	kg		
Γ.6	**ΕΡΓΑΣΙΕΣ ΕΠΙΘΕΩΡΗΣΗΣ ΚΙΝΗΤΗΡΑ**				
Γ.6.1	Ηλεκτρικές μετρήσεις τυλίγματος και πυρήνα στάτη	2.4.5	ΚΑΤΆ ΑΠΟΚΟΠΗ		
Γ.6.2	ΜΚΕ μπαρών βραχυκυκλωμένου κλωβού	2.4.5	ΚΑΤΆ ΑΠΟΚΟΠΗ		
Γ.6.3	ΜΚΕ δακτυλίων βραχυκύκλώσης κλωβού ρότορα	2.4.5	ΚΑΤΆ ΑΠΟΚΟΠΗ		
Γ.6.4	Ηλεκτρικές μετρήσεις ρότορα	2.4.5	ΚΑΤΆ ΑΠΟΚΟΠΗ		
Γ.6.5	Καθαρισμός με υδροβολή των ψυγείων νερού αέρος	2.4.5	ΚΑΤΆ ΑΠΟΚΟΠΗ		
Γ.6.6	Καθαρισμός με ξηρό πάγο τυλιγμάτων στάτη	2.4.5	ΚΑΤΆ ΑΠΟΚΟΠΗ		
Δ	**ΣΥΝΤΗΡΗΣΗ ΑΝΤΛΙΑΣ ΚΥΚΛΟΦΟΡΙΑΣ ΘΑΛΑΣΣΗΣ**				
Δ.1	**ΜΕΤΑΦΟΡΕΣ**				
Δ.1.1.	Μεταφορά αντλίας από ΑΗΣ Κ-Λ προς τις εγκαταστάσεις του Αναδόχου και το αντίθετο δρομολόγιο	2.3.1	ΚΑΤΆ ΑΠΟΚΟΠΗ		
Δ.1.2	Μεταφορά Κινητήρα αντλίας από ΑΗΣ Κ-Λ προς τις εγκαταστάσεις του Αναδόχου και το αντίθετο δρομολόγιο	2.3.1	ΚΑΤΆ ΑΠΟΚΟΠΗ		
Δ.2	**ΑΠΟΣΥΝΑΡΜΟΛΟΓΗΣΗ-ΣΥΝΑΡΜΟΛΟΓΗΣΗ ΑΝΤΛΙΑΣ**	2.3.2 & 2.3.3	ΚΑΤΆ ΑΠΟΚΟΠΗ		
Δ.3	**ΑΠΟΣΥΝΑΡΜΟΛΟΓΗΣΗ-ΣΥΝΑΡΜΟΛΟΓΗΣΗ ΚΙΝΗΤΗΡΑ ΑΝΤΛΙΑΣ**	2.3.4	ΚΑΤΆ ΑΠΟΚΟΠΗ		
Δ.4	**ΓΕΝΙΚΕΣ ΕΡΓΑΣΙΕΣ**				
Δ.4.1	Αμμοβολή καθαρισμός εξαρτημάτων	2.3.2	ΚΑΤΆ ΑΠΟΚΟΠΗ		
Δ.4.2	Εκτέλεση ΜΚΕ	2.3.2.Α	ΚΑΤΆ ΑΠΟΚΟΠΗ		
Δ.4.3	Έλεγχος παραμόρφωσης άξονα	2.3.2.Β	ΑΞΟΝΑΣ		
Δ.4.4	Τεχνική έκθεση αντλίας	2.3.2	ΚΑΤΆ ΑΠΟΚΟΠΗ		
Δ.4.5	Κατασκευαστικά σχέδια αντλίας	2.3.3α	ΚΑΤΆ ΑΠΟΚΟΠΗ		
Δ.5	**ΕΠΙΣΚΕΥΕΣ-ΚΑΤΑΣΚΕΥΕΣ ΕΞΑΡΤΗΜΑΤΩΝ**				

Α/Α	ΠΕΡΙΓΡΑΦΗ ΕΡΓΑΣΙΩΝ	ΑΡΘΡΟ ΤΕΧΝΙΚΗΣ ΠΡΟΔΙΑΓΡΑΦΗΣ	ΜΟΝΑΔΑ ΜΕΤΡΗΣΗΣ	ΤΙΜΗ ΜΟΝΑΔΑΣ (ΑΡΙΘΜΗΤΙΚΩΣ) €	ΤΙΜΗ ΜΟΝΑΔΑΣ (ΟΛΟΓΡΑΦΩΣ) €
Δ.5.1	Αντικατάσταση δακτυλίων φθοράς αντλίας	2.3.2.ε	ΔΑΚΤΥΛΙΟ		
Δ.5.2	Αντικατάσταση αντιτριβικού υλικού κουζινέτων	2.3.2.γ	ΚΟΥΖΙΝΕΤΟ		
Δ.5.3	Κατασκευή κόμπλερ αντλίας (Λεπτομέρεια C σχεδίου)	2.3.2	ΚΟΜΠΛΕΡ		
Δ.5.4	Κατασκευή προστατευτικών χιτωνίων άξονα	2.3.2.δ	ΧΙΤΩΝΙΟ		
Δ.5.5	Αναγόμωση επιφανειών οδηγών εσωτερικών κελυφών αντλίας για πάχη αναγόμωσης 1mm	2.3.2.στ	mm² (OD*S)		
Δ.5.6	Κατεργασία οδηγού (19) αντλίας	2.3.2.στ	ΩΡΕΣ ΧΡΗΣΗΣ ΕΡΓΑΛΕΙΟΜΗΧΑΝΗΣ		
Δ.5.7	Κατεργασία οδηγού εσωτερικού κελυφους (33) αντλίας	2.3.2.στ	ΩΡΕΣ ΧΡΗΣΗΣ ΕΡΓΑΛΕΙΟΜΗΧΑΝΗΣ		
Δ.6	**ΕΡΓΑΣΙΕΣ ΕΠΙΘΕΩΡΗΣΗΣ ΚΙΝΗΤΗΡΑ**				
Δ.6.1	Ηλεκτρικές μετρήσεις τυλίγματος και πυρήνα στάτη	2.3.4	ΚΑΤΆ ΑΠΟΚΟΠΗ		
Δ.6.2	ΜΚΕ μπαρών βραχυκυκλωμένου κλωβού	2.3.4	ΚΑΤΆ ΑΠΟΚΟΠΗ		
Δ.6.3	ΜΚΕ δακτυλίων βραχυκύκλώσης κλωβού ρότορα	2.3.4	ΚΑΤΆ ΑΠΟΚΟΠΗ		
Δ.6.4	Ηλεκτρικές μετρήσεις ρότορα	2.3.4	ΚΑΤΆ ΑΠΟΚΟΠΗ		
Δ.6.5	Καθαρισμός με υδροβολή των ψυγείων νερού αέρος	2.3.4	ΚΑΤΆ ΑΠΟΚΟΠΗ		
Δ.6.6	Καθαρισμός με ξηρό πάγο τυλιγμάτων στάτη	2.3.4	ΚΑΤΆ ΑΠΟΚΟΠΗ		

ΓΙΑ ΤΟΝ ΠΡΟΣΦΕΡΟΝΤΑ

Παράρτημα Ιβ

Προμέτρηση - Προϋπολογισμός Προσφοράς

ΑΝΤΙΚΕΙΜΕΝΟ: " Μηχανουργική Υποστήριξη Συντήρησης Συγκροτημάτων μέσης ισχύος Μονάδας V ΑΗΣ Κερατέας- Λαυρίου"

Α/Α	ΠΕΡΙΓΡΑΦΗ ΕΡΓΑΣΙΩΝ	ΠΑΡΑΓΡΑΦΟΣ ΤΕΧΝΙΚΗΣ ΠΡΟΔΙΑΓΡΑΦΗΣ	ΜΟΝΑΔΑ ΜΕΤΡΗΣΗΣ	ΠΟΣΟΤΗΤΑ	ΤΙΜΗ ΜΟΝΑΔΑΣ (ΑΡΙΘΜΗΤΙΚΩΣ) €	ΣΥΝΟΛΟ (€)
Α	**ΣΥΝΤΗΡΗΣΗ ΤΡΟΦΟΔΟΤΙΚΗΣ ΑΝΤΛΙΑΣ Υ.Π. 6Χ14WΧΗ10**					
Α.1	**ΜΕΤΑΦΟΡΕΣ**					
Α.1.1.	Μεταφορά αντλίας από ΑΗΣ Κ-Λ προς τις εγκαταστάσεις του Αναδόχου και το αντίθετο δρομολόγιο	2.1.1	ΚΑΤΆ ΑΠΟΚΟΠΗ	1		
Α.1.2	Μεταφορά Κινητήρα αντλίας από ΑΗΣ Κ-Λ προς τις εγκαταστάσεις του Αναδόχου και το αντίθετο δρομολόγιο	2.1.1	ΚΑΤΆ ΑΠΟΚΟΠΗ	1		
Α.2	**ΑΠΟΣΥΝΑΡΜΟΛΟΓΗΣΗ-ΣΥΝΑΡΜΟΛΟΓΗΣΗ ΑΝΤΛΙΑΣ**	2.1.2 και 2.1.4	ΚΑΤΆ ΑΠΟΚΟΠΗ	1		
Α.3	**ΑΠΟΣΥΝΑΡΜΟΛΟΓΗΣΗ-ΣΥΝΑΡΜΟΛΟΓΗΣΗ ΚΙΝΗΤΗΡΑ ΑΝΤΛΙΑΣ**	2.1.6	ΚΑΤΆ ΑΠΟΚΟΠΗ	1		
Α.4	**ΓΕΝΙΚΕΣ ΕΡΓΑΣΙΕΣ**					
Α.4.1	Αμμοβολή καθαρισμός εξαρτημάτων	2.1.3.1.Α	ΚΑΤΆ ΑΠΟΚΟΠΗ	1		
Α.4.2	Μηχανουργικές μετρήσεις μελέτη σχεδιασμού εξαρτημάτων Παράδοση κατασκευαστικών σχεδίων	2.1.3.1.Β	ΚΑΤΆ ΑΠΟΚΟΠΗ	1		
Α.4.3.	Εκτέλεση ΜΚΕ	2.1.3.1.Γ	ΚΑΤΆ ΑΠΟΚΟΠΗ	1		
Α.4.4	Ζυγοστάθμιση πτερωτών	2.1.3.2.β	ΕΞΑΡΤΗΜΑ	5		
Α.4.5	Έλεγχος παραμόρφωσης άξονα	2.1.3.2.ε	ΑΞΟΝΑΣ	1		
Α.4.6	Υδροστατική δοκιμή αντλίας	2.1.5	ΚΑΤΆ ΑΠΟΚΟΠΗ	1		
Α.4.7	Τεχνική έκθεση αντλίας	2.1.5	ΚΑΤΆ ΑΠΟΚΟΠΗ	1		
Α.5	**ΕΡΓΑΣΙΕΣ ΕΠΙΣΚΕΥΗΣ ΚΥΡΙΩΝ ΕΞΑΡΤΗΜΑΤΩΝ**					

Α/Α	ΠΕΡΙΓΡΑΦΗ ΕΡΓΑΣΙΩΝ	ΠΑΡΑΓΡΑΦΟΣ ΤΕΧΝΙΚΗΣ ΠΡΟΔΙΑΓΡΑΦΗΣ	ΜΟΝΑΔΑ ΜΕΤΡΗΣΗΣ	ΠΟΣΟΤΗΤΑ	ΤΙΜΗ ΜΟΝΑΔΑΣ (ΑΡΙΘΜΗΤΙΚΩΣ) €	ΣΥΝΟΛΟ (€)
Α.5.1	**ΛΕΙΑΝΣΕΙΣ ΕΠΙΦΑΝΕΙΩΝ ΣΤΕΓΑΝΟΠΟΙΗΣΗΣ**					
Α.5.1.1	Λείανση επιφανειών στεγανοποίησης εξαρτήματος 1150.1 και 2	2.1.3.2.α.1	ΩΡΕΣ ΧΡΗΣΗΣ ΕΡΓΑΛΕΙΟΜΗΧΑΝΗΣ	80		
Α.5.1.2	Λείανση επιφανειών στεγανοποίησης κελύφους αναρρόφησης 1910	2.1.3.2.α.3 και α.4	ΩΡΕΣ ΧΡΗΣΗΣ ΕΡΓΑΛΕΙΟΜΗΧΑΝΗΣ	15		
Α.5.1.3	Λείανση επιφανειών σπειροειδούς κελύφους αναρρόφησης 1130.1 και 2	2.1.3.2.α.5	ΩΡΕΣ ΧΡΗΣΗΣ ΕΡΓΑΛΕΙΟΜΗΧΑΝΗΣ	35		
Α.5.1.4	Λείανση επιφανειών σπειροειδούς κελύφους κατάθλιψης 1140	2.1.3.2.α.9	ΩΡΕΣ ΧΡΗΣΗΣ ΕΡΓΑΛΕΙΟΜΗΧΑΝΗΣ	30		
Α.5.1.5	Λείανση επιφανειών οδηγητικών πτερυγίων 1410.1,2 και 3	2.1.3.2.α.6	ΩΡΕΣ ΧΡΗΣΗΣ ΕΡΓΑΛΕΙΟΜΗΧΑΝΗΣ	80		
Α.5.1.6	Λείανση επιφανειών στεγανοποίησης πτερωτής διπλής αναρρόφησης 2200.1	2.1.3.2.β	ΩΡΕΣ ΧΡΗΣΗΣ ΕΡΓΑΛΕΙΟΜΗΧΑΝΗΣ	10		
Α.5.1.7	Λείναση επιφανειών στεγανοποίησης πτερωτών 2200.2,3	2.1.3.2.β	ΩΡΕΣ ΧΡΗΣΗΣ ΕΡΓΑΛΕΙΟΜΗΧΑΝΗΣ	80		
Α.5.1.8	Λείανση επιφανειών στεγανοποίησης ωστικού κολλάρου	2.1.3.2.γ	ΩΡΕΣ ΧΡΗΣΗΣ ΕΡΓΑΛΕΙΟΜΗΧΑΝΗΣ	8		
Α.5.1.9	Λείανση επιφανειών δίσκων εξισορρόπησης	2.1.3.2.δ	ΩΡΕΣ ΧΡΗΣΗΣ ΕΡΓΑΛΕΙΟΜΗΧΑΝΗΣ	15		
Α.5.1.10	Λειάνση επιφανειών άξονα (κονμβία,χιτώνια προστασίας	2.1.3.2.ε	ΩΡΕΣ ΧΡΗΣΗΣ ΕΡΓΑΛΕΙΟΜΗΧΑΝΗΣ	15		
Α.5.2	**ΑΝΑΓΟΜΩΣΕΙΣ ΦΘΟΡΩΝ ΚΑΙ ΤΕΛΙΚΗ ΚΑΤΕΡΓΑΣΙΑ ΣΕ ΟΝΟΜΑΣΤΙΚΕΣ ΔΙΑΣΤΑΣΕΙΣ**					
Α.5.2.1	Αναγόμωση σταθερών δακτυλίων στεγανοποίησης 1500.1 για πάχη αναγόμωσης έως 0,5mm	2.1.3.2.α.5	ΕΞΑΡΤΗΜΑ	2		
Α.5.2.2	Μηχανουργική κατεργασία σταθερού δακτυλίου 1500.1 στη τελική του διάσταση	2.1.3.2.α.5	ΩΡΕΣ ΧΡΗΣΗΣ ΕΡΓΑΛΕΙΟΜΗΧΑΝΗΣ	15		
Α.5.2.3	Αναγόμωση σταθερών δακτυλίων στεγανοποίησης 1500.2 έως και 1500.4 για πάχη αναγόμωσης έως 0,5mm	2.1.3.2.α.5	ΕΞΑΡΤΗΜΑ	6		
Α.5.2.4	Μηχανουργική κατεργασία σταθερών δακτυλίων 1500.2 έως και 4 στη τελική τους διάσταση	2.1.3.2.α.5	ΩΡΕΣ ΧΡΗΣΗΣ ΕΡΓΑΛΕΙΟΜΗΧΑΝΗΣ	30		
Α.5.2.5	Αναγόμωση επιφανειών στεγανοποίησης κελυφών 1150.1,2 με οδηγητικά πτερύγια 1140.2 για πάχη αναγόμωσης έως 0,5mm	2.1.3.2.α7	ΕΞΑΡΤΗΜΑ	4		
Α.5.2.6	Μηχανουργική κατεργασία κελυφών 1150	2.1.3.2.α7	ΩΡΕΣ ΧΡΗΣΗΣ ΕΡΓΑΛΕΙΟΜΗΧΑΝΗΣ	30		
Α.5.2.7	Αναγόμωση επιφανειών στεγανοποίησης κελυφών 1910 με οδηγητικά πτερύγια 1160 για πάχη αναγόμωσης έως 0,5mm	2.1.3.2.α4	ΕΞΑΡΤΗΜΑ	1		
Α.5.2.8	Μηχανουργική κατεργασία κελύφους 1910	2.1.3.2.α4	ΩΡΕΣ ΧΡΗΣΗΣ ΕΡΓΑΛΕΙΟΜΗΧΑΝΗΣ	15		

Α/Α	ΠΕΡΙΓΡΑΦΗ ΕΡΓΑΣΙΩΝ	ΠΑΡΑΓΡΑΦΟΣ ΤΕΧΝΙΚΗΣ ΠΡΟΔΙΑΓΡΑΦΗΣ	ΜΟΝΑΔΑ ΜΕΤΡΗΣΗΣ	ΠΟΣΟΤΗΤΑ	ΤΙΜΗ ΜΟΝΑΔΑΣ (ΑΡΙΘΜΗΤΙΚΩΣ) €	ΣΥΝΟΛΟ (€)
Α.5.2.5	Αναγόμωση με λευκό μέταλλο ακτινικών κουζινέτων 3300 και τελική κατεργασία	2.1.3.2.γ2	ΚΑΤΆ ΑΠΟΚΟΠΗ	1		
Α.5.2.6	Αναγόμωση με λευκό μέταλλο δακτυλίων στεγανοποίησης εδράνων και τελική κατεργασία	2.1.3.2.γ3	ΚΑΤΆ ΑΠΟΚΟΠΗ	2		
Α.5.3	**ΚΑΤΑΣΚΕΥΕΣ ΕΞΑΡΤΗΜΑΤΩΝ**					
Α.5.3.1	Κατασκευή κοχλία-περικοχλίου-ασφάλειας (tie rod,nut,washer) 6571,6580,2905	2.1.4	SET ΚΟΧΛΙΑ-ΠΑΞΙΜΑΔΙ-ΑΣΦΑΛΕΙΑ	3		
Α.5.3.2	Κατασκευές από ανοξείδωτο χάλυβα (σφήνες, πείροι,μικρουλικά λυόμενων συνδέσεων)	2.1.4	kg	50		
Α.5.3.3	Κατασκευές από χάλυβα κατασκευών (πείροι,κοχλίες)	2.1.4	kg	25		
Α.6	**ΕΡΓΑΣΙΕΣ ΕΠΙΘΕΩΡΗΣΗΣ ΚΙΝΗΤΗΡΑ**					
Α.6.1	Ηλεκτρικές μετρήσεις τυλίγματος και πυρήνα στάτη	2.1.6.1	ΚΑΤΆ ΑΠΟΚΟΠΗ	1		
Α.6.2	ΜΚΕ μπαρών βραχυκυκλωμένου κλωβού	2.1.6.2	ΚΑΤΆ ΑΠΟΚΟΠΗ	1		
Α.6.3	ΜΚΕ δακτυλίων βραχυκύκλώσης κλωβού ρότορα	2.1.6.2	ΚΑΤΆ ΑΠΟΚΟΠΗ	1		
Α.6.4	Ηλεκτρικές μετρήσεις ρότορα	2.1.6.2	ΚΑΤΆ ΑΠΟΚΟΠΗ	1		
Α.6.5	Αναγομώσεις με λευκό μέταλλο κουζινέτων κινητήρα	2.1.6.3	κουζινετο	1		
Α.6.6	Καθαρισμός με υδροβολή των ψυγείων νερού αέρος	2.1.,6.4	ΚΑΤΆ ΑΠΟΚΟΠΗ	1		
Α.6.7	Καθαρισμός με ξηρό πάγο τυλιγμάτων στάτη	2.1.6.1	ΚΑΤΆ ΑΠΟΚΟΠΗ	1		
Β	**ΣΥΝΤΗΡΗΣΗ ΤΡΟΦΟΔΟΤΙΚΗΣ ΑΝΤΛΙΑΣ Μ.Π. 3Χ11WΧΗ5**					
Β.1	**ΜΕΤΑΦΟΡΕΣ**					
Β.1.1	Μεταφορά αντλίας από ΑΗΣ Κ-Λ προς τις εγκαταστάσεις του Αναδόχου και το αντίθετο δρομολόγιο	2.2.1	ΚΑΤΆ ΑΠΟΚΟΠΗ	2		
Β.1.2	Μεταφορά Κινητήρα αντλίας από ΑΗΣ Κ-Λ προς τις εγκαταστάσεις του Αναδόχου και το αντίθετο δρομολόγιο	2.2.1	ΚΑΤΆ ΑΠΟΚΟΠΗ	2		
Β.2	**ΑΠΟΣΥΝΑΡΜΟΛΟΓΗΣΗ-ΣΥΝΑΡΜΟΛΟΓΗΣΗ ΑΝΤΛΙΑΣ**	2.2.2 και 2.1.4	ΑΝΤΛΙΑ	2		

Α/Α	ΠΕΡΙΓΡΑΦΗ ΕΡΓΑΣΙΩΝ	ΠΑΡΑΓΡΑΦΟΣ ΤΕΧΝΙΚΗΣ ΠΡΟΔΙΑΓΡΑΦΗΣ	ΜΟΝΑΔΑ ΜΕΤΡΗΣΗΣ	ΠΟΣΟΤΗΤΑ	ΤΙΜΗ ΜΟΝΑΔΑΣ (ΑΡΙΘΜΗΤΙΚΩΣ) €	ΣΥΝΟΛΟ (€)
Β.3	**ΑΠΟΣΥΝΑΡΜΟΛΟΓΗΣΗ-ΣΥΝΑΡΜΟΛΟΓΗΣΗ ΚΙΝΗΤΗΡΑ ΑΝΤΛΙΑΣ**	2.2.6	ΚΙΝΗΤΗΡΑ	2		
Β.4	**ΓΕΝΙΚΕΣ ΕΡΓΑΣΙΕΣ**					
Β.4.1	Αμμοβολή καθαρισμός εξαρτημάτων	2.2.3.1.Α	ΚΑΤΆ ΑΠΟΚΟΠΗ	2		
Β.4.2	Μηχανουργικές μετρήσεις μελέτη σχεδιασμού εξαρτημάτων και παράδοση κατασκευαστικών σχεδίων	2.2.3.1.Β	ΚΑΤΆ ΑΠΟΚΟΠΗ	1		
Β.4.3	Εκτέλεση ΜΚΕ	2.2.3.1.Γ	ΚΑΤΆ ΑΠΟΚΟΠΗ	2		
Β.4.4	Ζυγοστάθμιση πτερωτών	2.2.3.2.β	ΕΞΑΡΤΗΜΑ	5		
Β.4.5	Έλεγχος παραμόρφωσης άξονα	2.2.3.2.δ	ΑΞΟΝΑΣ	2		
Β.4.6	Υδροστατική δοκιμή αντλίας	2.2.5	ΚΑΤΆ ΑΠΟΚΟΠΗ	2		
Β.4.7	Τεχνική έκθεση αντλίας	2.2.5	ΚΑΤΆ ΑΠΟΚΟΠΗ	2		
Β.5.1	**ΛΕΙΑΝΣΕΙΣ ΕΠΙΦΑΝΕΙΩΝ ΣΤΕΓΑΝΟΠΟΙΗΣΗΣ**					
Β.5.1	Λείανση επιφανειών στεγανοποίησης εξαρτήματος 1150.1 και 2	2.1.3.2.α.1	ΩΡΕΣ ΧΡΗΣΗΣ ΕΡΓΑΛΕΙΟΜΗΧΑΝΗΣ	40		
Β.5.2	Λείανση επιφανειών σπειροειδούς κελύφους αναρρόφησης 1130	2.1.3.2.α.5	ΩΡΕΣ ΧΡΗΣΗΣ ΕΡΓΑΛΕΙΟΜΗΧΑΝΗΣ	20		
Β.5.3	Λείανση επιφανειών σπειροειδούς κελύφους κατάθλιψης 1140	2.1.3.2.α.9	ΩΡΕΣ ΧΡΗΣΗΣ ΕΡΓΑΛΕΙΟΜΗΧΑΝΗΣ	20		
Β.5.4	Λείανση επιφανειών οδηγητικών πτερυγίων 1410.1,2	2.1.3.2.α.6	ΩΡΕΣ ΧΡΗΣΗΣ ΕΡΓΑΛΕΙΟΜΗΧΑΝΗΣ	40		
Β.5.5	Λείναση επιφανειών στεγανοποίησης πτερωτών 2200.2,3	2.1.3.2.β	ΩΡΕΣ ΧΡΗΣΗΣ ΕΡΓΑΛΕΙΟΜΗΧΑΝΗΣ	40		
Β.5.6	Λείανση επιφανειών δίσκων εξισορρόπησης	2.1.3.2.δ	ΩΡΕΣ ΧΡΗΣΗΣ ΕΡΓΑΛΕΙΟΜΗΧΑΝΗΣ	16		
Β.5.7	Λειάνση επιφανειών άξονα (κονμβία,χιτώνια προστασίας	2.1.3.2.ε	ΩΡΕΣ ΧΡΗΣΗΣ ΕΡΓΑΛΕΙΟΜΗΧΑΝΗΣ	8		
Β.5.2	**ΑΝΑΓΟΜΩΣΕΙΣ ΦΘΟΡΩΝ ΚΑΙ ΤΕΛΙΚΗ ΚΑΤΕΡΓΑΣΙΑ ΣΕ ΟΝΟΜΑΣΤΙΚΕΣ ΔΙΑΣΤΑΣΕΙΣ**					
Β.5.2.1	Αναγόμωση σταθερών δακτυλίων στεγανοποίησης 1500.1,2 για πάχη αναγόμωσης έως 0,5mm	2.2.3.2.α4	ΕΞΑΡΤΗΜΑ	4		
Β.5.2.2	Μηχανουργική κατεργασία αναγομωμένων επιφανεριών δακτυλίων στεγανοποίησης 1500.1,2	2.1.3.2.α4	ΩΡΕΣ ΧΡΗΣΗΣ ΕΡΓΑΛΕΙΟΜΗΧΑΝΗΣ	20		
Β.5.2.3	Αναγόμωση επιφανειών στεγανοποίησης κελυφών 1150.1,2 με οδηγητικά πτερύγια 1140.2 για πάχη αναγόμωσης έως 0,5mm	2.2.3.2.α4	ΕΞΑΡΤΗΜΑ	2		

Α/Α	ΠΕΡΙΓΡΑΦΗ ΕΡΓΑΣΙΩΝ	ΠΑΡΑΓΡΑΦΟΣ ΤΕΧΝΙΚΗΣ ΠΡΟΔΙΑΓΡΑΦΗΣ	ΜΟΝΑΔΑ ΜΕΤΡΗΣΗΣ	ΠΟΣΟΤΗΤΑ	ΤΙΜΗ ΜΟΝΑΔΑΣ (ΑΡΙΘΜΗΤΙΚΩΣ) €	ΣΥΝΟΛΟ (€)
Β.5.2.4	Μηχανουργική κατεργασία αναγομωμένων επιφανειών κελυφών 1150.1 ,2	2.2.3.2.α	ΩΡΕΣ ΧΡΗΣΗΣ ΕΡΓΑΛΕΙΟΜΗΧΑΝΗΣ	15		
Β.5.3	**ΚΑΤΑΣΚΕΥΕΣ ΕΞΑΡΤΗΜΑΤΩΝ**					
Β.5.3.1	Κατασκευή κοχλία-περικοχλίου-ασφάλειας (tie rod,nut,washer) 6571,6580,2905	2.1.4	SET ΚΟΧΛΙΑ-ΠΑΞΙΜΑΔΙ-ΑΣΦΑΛΕΙΑ	1		
Β.5.3.2	Κατασκευές από ανοξείδωτο χάλυβα (πείροι,μικρουλικά λυόμενων συνδέσεων)	2.1.4	kg	30		
Β.6	**ΕΡΓΑΣΙΕΣ ΕΠΙΘΕΩΡΗΣΗΣ ΚΙΝΗΤΗΡΑ**					
Β.6.1	Ηλεκτρικές μετρήσεις τυλίγματος και πυρήνα στάτη	2.1.6.1	ΚΑΤΆ ΑΠΟΚΟΠΗ	2		
Β.6.2	ΜΚΕ μπαρών βραχυκυκλωμένου κλωβού	2.1.6.2	ΚΑΤΆ ΑΠΟΚΟΠΗ	2		
Β.6.3	ΜΚΕ δακτυλίων βραχυκύκλώσης κλωβού ρότορα	2.1.6.2	ΚΑΤΆ ΑΠΟΚΟΠΗ	2		
Β.6.4	Ηλεκτρικές μετρήσεις ρότορα	2.1.6.2	ΚΑΤΆ ΑΠΟΚΟΠΗ	2		
Β.6.5	Καθαρισμός με ξηρό πάγο τυλιγμάτων στάτη	2.1.6.1	ΚΑΤΆ ΑΠΟΚΟΠΗ	2		
Γ	**ΣΥΝΤΗΡΗΣΗ ΑΝΤΛΙΑΣ ΣΥΜΠΥΚΝΩΜΑΤΟΣ**					
Γ.1	**ΜΕΤΑΦΟΡΕΣ**					
Γ.1.1.	Μεταφορά αντλίας από ΑΗΣ Κ-Λ προς τις εγκαταστάσεις του Αναδόχου και το αντίθετο δρομολόγιο	2.4.1	ΚΑΤΆ ΑΠΟΚΟΠΗ	2		
Γ.1.2	Μεταφορά Κινητήρα αντλίας από ΑΗΣ Κ-Λ προς τις εγκαταστάσεις του Αναδόχου και το αντίθετο δρομολόγιο	2.4.1	ΚΑΤΆ ΑΠΟΚΟΠΗ	2		
Γ.2	**ΑΠΟΣΥΝΑΡΜΟΛΟΓΗΣΗ-ΣΥΝΑΡΜΟΛΟΓΗΣΗ ΑΝΤΛΙΑΣ**	2.4.2 & 2.4.4	ΚΑΤΆ ΑΠΟΚΟΠΗ	2		
Γ.3	**ΑΠΟΣΥΝΑΡΜΟΛΟΓΗΣΗ-ΣΥΝΑΡΜΟΛΟΓΗΣΗ ΚΙΝΗΤΗΡΑ ΑΝΤΛΙΑΣ**	2.4.5	ΚΑΤΆ ΑΠΟΚΟΠΗ	2		
Γ.4	**ΓΕΝΙΚΕΣ ΕΡΓΑΣΙΕΣ**					
Γ.4.1	Αμμοβολή καθαρισμός εξαρτημάτων	2.4.3.1	ΚΑΤΆ ΑΠΟΚΟΠΗ	2		
Γ.4.2	Μηχανουργικές μετρήσεις μελέτη σχεδιασμού εξαρτημάτων Παράδοση κατασκευαστικών σχεδίων	2.4.3.1.Β	ΚΑΤΆ ΑΠΟΚΟΠΗ	1		
Γ.4.3	Εκτέλεση ΜΚΕ	2.4.3.1.Α	ΚΑΤΆ ΑΠΟΚΟΠΗ	2		
Γ.4.4	Ζυγοστάθμιση πτερωτών	2.4	ΕΞΑΡΤΗΜΑ	4		
Γ.4.5	Έλεγχος παραμόρφωσης άξονα	2.4.3.2.α	ΑΞΟΝΑΣ	4		

Α/Α	ΠΕΡΙΓΡΑΦΗ ΕΡΓΑΣΙΩΝ	ΠΑΡΑΓΡΑΦΟΣ ΤΕΧΝΙΚΗΣ ΠΡΟΔΙΑΓΡΑΦΗΣ	ΜΟΝΑΔΑ ΜΕΤΡΗΣΗΣ	ΠΟΣΟΤΗΤΑ	ΤΙΜΗ ΜΟΝΑΔΑΣ (ΑΡΙΘΜΗΤΙΚΩΣ) €	ΣΥΝΟΛΟ (€)
Γ.4.6	Τεχνική έκθεση αντλίας	2.4	ΚΑΤΆ ΑΠΟΚΟΠΗ	2		
Γ.5	**ΕΡΓΑΣΙΕΣ ΕΠΙΣΚΕΥΗΣ ΚΥΡΙΩΝ ΕΞΑΡΤΗΜΑΤΩΝ**					
Γ.5.1	**ΛΕΙΑΝΣΕΙΣ ΕΠΙΦΑΝΕΙΩΝ ΣΤΕΓΑΝΟΠΟΙΗΣΗΣ**					
Γ.5.1.1	Λείανση επιφανειών στεγανοποίησης κελυφών και οδηγητικών σωλήνων	2.4.3.2.δ	ΩΡΕΣ ΧΡΗΣΗΣ ΕΡΓΑΛΕΙΟΜΗΧΑΝΗΣ	100		
Γ.5.1.2	Λείανση γλαντζών στομίου κατάθλιψης	2.4.3.2.ε	ΩΡΕΣ ΧΡΗΣΗΣ ΕΡΓΑΛΕΙΟΜΗΧΑΝΗΣ	30		
Γ.5.2	**ΕΠΙΣΚΕΥΕΣ ΕΞΑΡΤΗΜΑΤΩΝ**					
Γ.5.2.1	Αντικατάσταση δακτυλίων φθοράς οδηγητικών πτερυγίων	2.4.3.2.γ	ΔΑΚΤΥΛΙΟ	4		
Γ.5.2.2	Αντικατάσταση αντιτριβικού υλικού κουζινέτων	2.4.3.2.β	ΚΟΥΖΙΝΕΤΟ	4		
Γ.5.2.3	Αποκατάσταση παραμορφωμένου άξονα	2.4.3.2.α	ΑΞΟΝΑΣ	1		
Γ.5.3	**ΚΑΤΑΣΚΕΥΕΣ ΕΞΑΡΤΗΜΑΤΩΝ**					
Γ.5.3.1	Κατασκευή κόμπλερ αντλίας (Λεπτομέρεια C σχεδίου)	2.4	ΚΟΜΠΛΕΡ	1		
Γ.5,.3.2	Κατασκευές από ανοξείδωτο χάλυβα (πείροι,μικρουλικά λυόμενων συνδέσεων)	2.4.3.2.στ	kg	30		
Γ.6	**ΕΡΓΑΣΙΕΣ ΕΠΙΘΕΩΡΗΣΗΣ ΚΙΝΗΤΗΡΑ**					
Γ.6.1	Ηλεκτρικές μετρήσεις τυλίγματος και πυρήνα στάτη	2.4.5	ΚΑΤΆ ΑΠΟΚΟΠΗ	2		
Γ.6.2	ΜΚΕ μπαρών βραχυκυκλωμένου κλωβού	2.4.5	ΚΑΤΆ ΑΠΟΚΟΠΗ	2		
Γ.6.3	ΜΚΕ δακτυλίων βραχυκύκλώσης κλωβού ρότορα	2.4.5	ΚΑΤΆ ΑΠΟΚΟΠΗ	2		
Γ.6.4	Ηλεκτρικές μετρήσεις ρότορα	2.4.5	ΚΑΤΆ ΑΠΟΚΟΠΗ	2		
Γ.6.5	Καθαρισμός με υδροβολή των ψυγείων νερού αέρος	2.4.5	ΚΑΤΆ ΑΠΟΚΟΠΗ	2		
Γ.6.6	Καθαρισμός με ξηρό πάγο τυλιγμάτων στάτη	2.4.5	ΚΑΤΆ ΑΠΟΚΟΠΗ	2		
Δ	**ΣΥΝΤΗΡΗΣΗ ΑΝΤΛΙΑΣ ΚΥΚΛΟΦΟΡΙΑΣ ΘΑΛΑΣΣΗΣ**					
Δ.1	**ΜΕΤΑΦΟΡΕΣ**					
Δ.1.1.	Μεταφορά αντλίας από ΑΗΣ Κ-Λ προς τις εγκαταστάσεις του Αναδόχου και το αντίθετο δρομολόγιο	2.3.1	ΚΑΤΆ ΑΠΟΚΟΠΗ	2		
Δ.1.2	Μεταφορά Κινητήρα αντλίας από ΑΗΣ Κ-Λ προς τις εγκαταστάσεις του Αναδόχου και το αντίθετο δρομολόγιο	2.3.1	ΚΑΤΆ ΑΠΟΚΟΠΗ	2		
Δ.2	**ΑΠΟΣΥΝΑΡΜΟΛΟΓΗΣΗ-ΣΥΝΑΡΜΟΛΟΓΗΣΗ ΑΝΤΛΙΑΣ**	2.3.2 & 2.3.3	ΚΑΤΆ ΑΠΟΚΟΠΗ	2		
Δ.3	**ΑΠΟΣΥΝΑΡΜΟΛΟΓΗΣΗ-ΣΥΝΑΡΜΟΛΟΓΗΣΗ ΚΙΝΗΤΗΡΑ ΑΝΤΛΙΑΣ**	2.3.4	ΚΑΤΆ ΑΠΟΚΟΠΗ	2		
Δ.4	**ΓΕΝΙΚΕΣ ΕΡΓΑΣΙΕΣ**					
Δ.4.1	Αμμοβολή καθαρισμός εξαρτημάτων	2.3.2	ΚΑΤΆ ΑΠΟΚΟΠΗ	2		
Δ.4.2	Εκτέλεση ΜΚΕ	2.3.2.Α	ΚΑΤΆ ΑΠΟΚΟΠΗ	2		
Δ.4.3	Έλεγχος παραμόρφωσης άξονα	2.3.2.Β	ΑΞΟΝΑΣ	4		
Δ.4.4	Τεχνική έκθεση αντλίας	2.3.2	ΚΑΤΆ ΑΠΟΚΟΠΗ	2		
Δ.4.5	Κατασκευαστικά σχέδια αντλίας	2.3.3α	ΚΑΤΆ ΑΠΟΚΟΠΗ	1		
Δ.5	**ΕΠΙΣΚΕΥΕΣ-ΚΑΤΑΣΚΕΥΕΣ ΕΞΑΡΤΗΜΑΤΩΝ**					
Δ.5.1	Αντικατάσταση δακτυλίων φθοράς αντλίας	2.3.2.ε	ΔΑΚΤΥΛΙΟ	4		
Δ.5.2	Αντικατάσταση αντιτριβικού υλικού κουζινέτων	2.3.2.γ	ΚΟΥΖΙΝΕΤΟ	4		
Δ.5.3	Κατασκευή κόμπλερ αντλίας (Λεπτομέρεια C σχεδίου)	2.3.2	ΚΟΜΠΛΕΡ	2		
Δ.5.4	Κατασκευή προστατευτικών χιτωνίων άξονα	2.3.2.δ	ΧΙΤΩΝΙΟ	2		
Δ.5.5	Αναγόμωση επιφανειών οδηγών εσωτερικών κελυφών αντλίας για πάχη αναγόμωσης 1mm	2.3.2.στ	mm^2 (OD*S)	30000		

Α/Α	ΠΕΡΙΓΡΑΦΗ ΕΡΓΑΣΙΩΝ	ΠΑΡΑΓΡΑΦΟΣ ΤΕΧΝΙΚΗΣ ΠΡΟΔΙΑΓΡΑΦΗΣ	ΜΟΝΑΔΑ ΜΕΤΡΗΣΗΣ	ΠΟΣΟΤΗΤΑ	ΤΙΜΗ ΜΟΝΑΔΑΣ (ΑΡΙΘΜΗΤΙΚΩΣ) €	ΣΥΝΟΛΟ (€)
Δ.5.6	Κατεργασία οδηγού (19) αντλίας	2.3.2.στ	ΩΡΕΣ ΧΡΗΣΗΣ ΕΡΓΑΛΕΙΟΜΗΧΑΝΗΣ	20		
Δ.5.7	Κατεργασία οδηγού εσωτερικού κελυφους (33) αντλίας	2.3.2.στ	ΩΡΕΣ ΧΡΗΣΗΣ ΕΡΓΑΛΕΙΟΜΗΧΑΝΗΣ	40		
Δ.6	**ΕΡΓΑΣΙΕΣ ΕΠΙΘΕΩΡΗΣΗΣ ΚΙΝΗΤΗΡΑ**					
Δ.6.1	Ηλεκτρικές μετρήσεις τυλίγματος και πυρήνα στάτη	2.3.4	ΚΑΤΆ ΑΠΟΚΟΠΗ	2		
Δ.6.2	ΜΚΕ μπαρών βραχυκυκλωμένου κλωβού	2.3.4	ΚΑΤΆ ΑΠΟΚΟΠΗ	2		
Δ.6.3	ΜΚΕ δακτυλίων βραχυκύκλώσης κλωβού ρότορα	2.3.4	ΚΑΤΆ ΑΠΟΚΟΠΗ	2		
Δ.6.4	Ηλεκτρικές μετρήσεις ρότορα	2.3.4	ΚΑΤΆ ΑΠΟΚΟΠΗ	2		
Δ.6.5	Καθαρισμός με υδροβολή των ψυγείων νερού αέρος	2.3.4	ΚΑΤΆ ΑΠΟΚΟΠΗ	2		
Δ.6.6	Καθαρισμός με ξηρό πάγο τυλιγμάτων στάτη	2.3.4	ΚΑΤΆ ΑΠΟΚΟΠΗ	2		

ΓΕΝΙΚΟ ΣΥΝΟΛΟ	
ΓΕΝΙΚΟ ΣΥΝΟΛΟ ΟΛΟΓΡΑΦΩΣ	

ΓΙΑ ΤΟΝ ΠΡΟΣΦΕΡΟΝΤΑ

ΠΑΡΑΡΤΗΜΑ ΙΙ
(Τεύχους 1 της Πρόσκλησης)

Πίνακας Κατανομής Τιμήματος

Το Συνολικό τίμημα σε ΕΥΡΩ θα καταβληθεί όπως παρακάτω :

ΜΕΛΗ ΣΥΜΠΡΑΞΗΣ/ ΕΝΩΣΗΣ ΕΝΔΙΑΦΕΡΟΜΕΝΩΝ	ΤΙΜΗΜΑ ΣΕ ΕΥΡΩ	
	Αριθμητικώς	Ολογράφως
.....	.....	.....
.....	.....	.....
.....	.....	.....
.....	.....	.....

Υποστηρικτικές Λειτουργίες **Διεύθυνση Προμηθειών Λειτουργιών Παραγωγής**

Αρ.Πρόσκλησης ΔΠΛΠ 1668

ΠΙΝΑΚΑΣ ΕΜΠΕΙΡΙΑΣ ΚΑΙ ΣΥΣΤΑΣΕΩΝ Α

Σε μηχανολογικές κατασκευές και σε σχεδιασμό μηχανολογικών κατασκευών βιομηχανικών εφαρμογών με διαδικασία αντιγραφής κατασκευής (reverse engineering).

ΑΝΤΙΚΕΙΜΕΝΟ: " Μηχανουργική Υποστήριξη Συντήρησης Συγκροτημάτων μέσης ισχύος Μονάδας V ΑΗΣ Κερατέας- Λαυρίου"

Α/Α	ΤΙΤΛΟΣ ΕΡΓΑΣΙΩΝ	ΠΕΡΙΓΡΑΦΗ ΕΡΓΑΣΙΩΝ	ΑΠΟΔΕΚΤΗΣ ΥΠΗΡΕΣΙΩΝ(ΑΝΤΙΣΥΜΒΑΛΛΟΜΕΝΟΣ)	ΤΟΠΟΣ ΠΑΡΟΧΗΣ ΥΠΗΡΕΣΙΩΝ	ΠΡΟΥΠΟΛΟΓΙΣΜΟΣ ΣΕ ΕΥΡΩ	ΠΟΣΟΣΤΟ ΣΥΜΜΕΤΟΧΗΣ ΣΤΗΝ ΕΚΤΕΛΕΣΗ ΕΡΓΑΣΙΩΝ	ΠΕΡΙΟΔΟΣ ΕΚΤΕΛΕΣΗΣ ΕΡΓΑΣΙΩΝ	ΒΕΒΑΙΩΣΕΙΣ ΚΑΛΗΣ ΕΚΤΕΛΕΣΗΣ ΕΡΓΑΣΙΩΝ

Υποστηρικτικές Λειτουργίες **Διεύθυνση Προμηθειών Λειτουργιών Παραγωγής**

Αρ.Πρόσκλησης ΔΠΛΠ 1668

ΠΙΝΑΚΑΣ ΕΜΠΕΙΡΙΑΣ ΚΑΙ ΣΥΣΤΑΣΕΩΝ Β

(Σε συντήρηση κινητήρων μέσης τάσης (σχεδιασμού multi turn form wound τυλίγματα στάτη)

ΑΝΤΙΚΕΙΜΕΝΟ: " Μηχανουργική Υποστήριξη Συντήρησης Συγκροτημάτων μέσης ισχύος Μονάδας V ΑΗΣ Κερατέας- Λαυρίου"

Α/Α	ΤΙΤΛΟΣ ΕΡΓΑΣΙΩΝ	ΠΕΡΙΓΡΑΦΗ ΕΡΓΑΣΙΩΝ	ΑΠΟΔΕΚΤΗΣ ΥΠΗΡΕΣΙΩΝ(ΑΝΤΙΣΥΜΒΑΛΛΟΜΕΝΟΣ)	ΤΟΠΟΣ ΠΑΡΟΧΗΣ ΥΠΗΡΕΣΙΩΝ	ΠΡΟΥΠΟΛΟΓΙΣΜΟΣ ΣΕ ΕΥΡΩ	ΠΟΣΟΣΤΟ ΣΥΜΜΕΤΟΧΗΣ ΣΤΗΝ ΕΚΤΕΛΕΣΗ ΕΡΓΑΣΙΩΝ	ΠΕΡΙΟΔΟΣ ΕΚΤΕΛΕΣΗΣ ΕΡΓΑΣΙΩΝ	ΒΕΒΑΙΩΣΕΙΣ ΚΑΛΗΣ ΕΚΤΕΛΕΣΗΣ ΕΡΓΑΣΙΩΝ

Αριθμός Πρόσκλησης : **ΔΠΛΠ 1668**

Αντικείμενο: «Μηχανουργική υποστήριξη συντήρησης συγκροτημάτων μέσης ισχύος μονάδας V ΑΗΣ Κερατέας-Λαυρίου»

ΣΥΜΦΩΝΗΤΙΚΟ ΣΥΜΒΑΣΗΣ ΥΠΗΡΕΣΙΩΝ ΣΥΝΤΗΡΗΣΗΣ

ΣΥΜΦΩΝΗΤΙΚΟ ΣΥΜΒΑΣΗΣ

Στην Αθήνα σήμερα την ..... μεταξύ των συμβαλλομένων:

α) του πρώτου των συμβαλλομένων με την επωνυμία Δημόσια Επιχείρηση Ηλεκτρισμού Α.Ε., και διακριτικό τίτλο ΔΕΗ ΑΕ (εφεξής ΔΕΗ ή Εταιρεία), που εδρεύει στην Αθήνα, οδός Χαλκοκονδύλη 30, Τ.Κ. 104 32, όπως εν προκειμένω νόμιμα εκπροσωπείται από ……, και

β) του δεύτερου των συμβαλλομένων …… (εφεξής Αντισυμβαλλόμενος ή Εργολάβος), που εδρεύει …… και εκπροσωπείται νόμιμα, σε αυτήν την περίπτωση από ……,

συμφωνήθηκαν, συνομολογήθηκαν και έγιναν αμοιβαίως αποδεκτά, χωρίς καμία επιφύλαξη τα ακόλουθα:

Άρθρο 1
Τεύχη της Σύμβασης

1.1 Η Σύμβαση αποτελείται από τα παρακάτω τεύχη τα οποία υπογεγραμμένα από τα συμβαλλόμενα μέρη αποτελούν ένα ενιαίο σύνολο:

α. Συμφωνητικό Σύμβασης
β. Ειδικοί Όροι Σύμβασης
γ. Τεχνική Περιγραφή με συνημμένα
δ. Ανάλυση Συμβατικού Τιμήματος
- Τιμολόγιο
- Προμέτρηση – Προυπολογισμός

ε. Γενικοί Όροι Σύμβασης
στ. Ασφαλίσεις

1.2 Η σειρά με την οποία αναφέρονται τα τεύχη στην προηγούμενη παράγραφο καθορίζει τη σειρά ισχύος των όρων καθενός από αυτά, σε περίπτωση που υπάρχουν διαφορές στο κείμενο ή στην ερμηνεία των όρων δύο ή περισσοτέρων τευχών.

1.3 Ρητά συμφωνείται μεταξύ των συμβαλλομένων μερών ότι η Σύμβαση αυτή αποτελεί τη μοναδική συμφωνία που υπάρχει μεταξύ τους για το υπόψη αντικείμενο και ότι όλα τα έγγραφα που τυχόν ανταλλάχθηκαν μεταξύ τους, πριν από την υπογραφή της, καθώς και οι τυχόν συζητήσεις και συμφωνίες, οποιασδήποτε φύσης και περιγραφής, που έγιναν προφορικά ή σιωπηρά και δεν συμπεριλήφθηκαν στη Σύμβαση αυτή θεωρούνται ότι δεν έχουν ισχύ, ότι στερούνται οποιουδήποτε νομικού αποτελέσματος, ότι δεν θα δεσμεύουν τους συμβαλλόμενους και ότι δεν θα ληφθούν υπόψη για την ερμηνεία των όρων της Σύμβασης αυτής.
Οποιαδήποτε πράξη ή ενέργεια του Αντισυμβαλλόμενου, απαραίτητη για την ολοκλήρωση του αντικειμένου πρέπει να είναι σε απόλυτη συμφωνία προς τις απαιτήσεις και τις διατάξεις της Σύμβασης, ακόμη και αν η πράξη ή ενέργεια αυτή δεν αναφέρεται ειδικά στη Σύμβαση.

1.4 Επίσης συμφωνείται ρητά ότι όλοι οι όροι της Σύμβασης είναι εξ ίσου ουσιώδεις και ότι κάθε μελλοντική τροποποίηση οποιουδήποτε τεύχους της Σύμβασης θα γίνεται μόνο εγγράφως (Συμπληρώματα, Εντολές Τροποποιήσεως κ.λπ.).

Άρθρο 2
Αντικείμενο της Σύμβασης

2.1 Με τη Σύμβαση αυτή η Εταιρεία αναθέτει και ο Αντισυμβαλλόμενος αναλαμβάνει την υποχρέωση να προβεί στην έγκαιρη, έντεχνη, άρτια, οικονομική και ασφαλή εκτέλεση της Παροχής Υπηρεσιών με αντικείμενο **«Μηχανουργική υποστήριξη συντήρησης συγκροτημάτων μέσης ισχύος Μονάδας V ΑΗΣ Κερατέας – Λαυρίου»**, όπως αυτό αναλυτικά περιγράφεται πιο κάτω, έτσι ώστε να είναι κατάλληλο για τη χρήση και λειτουργία που προορίζεται και σε πλήρη συμμόρφωση προς τους όρους της Σύμβασης.

2.2 Στην έννοια του υπόψη αντικειμένου περιλαμβάνονται ενδεικτικά και όχι περιοριστικά τα ακόλουθα:
Τη μηχανουργική υποστήριξη σε μηχανουργείο για την εκτέλεση της συντήρησης επτά (7) αντλητικών συγκροτημάτων 6kV της Μονάδας V ΑΗΣ Κερατέας-Λαυρίου που είναι ο κύριος βοηθητικός εξοπλισμός της Μονάδας. Τα επτά αντλητικά συγκροτήματα είναι:

- Δύο (2) αντλίες κυκλοφορίας θαλάσσης τύπου 45APMA
- Δύο (2) αντλίες συμπυκνώματος τύπου 243- A PKD-4
- Δύο (2) τροφοδοτικές αντλίες Μέσης Πίεσης τύπου 3x11WXH5
- Μία (1) τροφοδοτική αντλία υψηλής πίεσης τύπου 6x14WXH10

Ο Αντισυμβαλλόμενος θα παραλάβει από το συνεργείο Συντήρησης του ΑΗΣ Κερατέας- Λαυρίου τις παραπάνω αντλίες βάσει συγκεκριμένου χρονικού προγραμματισμού και θα εκτελέσει τις παρακάτω εργασίες:

- Παραλαβή και μεταφορά από το μηχανουργείο του ΑΗΣ Κερατέας-Λαυρίου της αντλίας επί της μεταλλικής της βάσης και του αντίστοιχου κινητήρα 6KV με δικά του μέσα και κόστος.
- Αποσυναρμολόγηση της αντλίας σύμφωνα με τις οδηγίες του τεχνικού εγχειριδίου, που επισυνάπτεται στο παράρτημα Α.
- Αποσυναρμολόγηση, επιθεώρηση, εκτέλεση ηλεκτρικών μετρήσεων του κινητήρα της αντλίας σύμφωνα με τις οδηγίες του ίδιου τεχνικού εγχειριδίου
- Επιθεώρηση και επισκευή των επιμέρους στρατηγικών ανταλλακτικών της αντλίας.
- Συναρμολόγηση της αντλίας με καινούργια αναλώσιμα ανταλλακτικά που είτε θα προμηθεύσει ή θα κατασκευάσει ο Αντισυμβαλλόμενος.
- Συναρμολόγηση του κινητήρα με καινούργια αναλώσιμα ανταλλακτικά.
- Μεταφορά της αντλίας και του κινητήρα στις εγκαταστάσεις του ΑΗΣ Κερατέας-Λαυρίου.

όπως αναλυτικά περιγράφονται στο τεύχος της Τεχνικής Περιγραφής.

Άρθρο 3
Συμβατικό Τίμημα

3.1 Το Συμβατικό Τίμημα (Συμβατικός Προϋπολογισμός) του αντικειμένου, όπως αυτό περιγράφεται στο Άρθρο 2 του παρόντος Συμφωνητικού, ανέρχεται σε ……**Ευρώ** (……**€**)

3.2 Το Συμβατικό Τίμημα υπολογίστηκε ως άθροισμα των γινομένων των τιμών μονάδας του "Τιμολογίου" επί τις αντίστοιχες ποσότητες που αναγράφονται στο Τεύχος "Προμέτρηση – Προϋπολογισμός", των κατ' αποκοπή τιμών και του κονδυλίου των απροβλέπτων.

3.3 Οι αναφερόμενες ποσότητες στο τεύχος Προμέτρηση – Προϋπολογισμός έχουν αναγραφεί κατά προσέγγιση και είναι ενδεικτικές και κατ' ουδένα τρόπο συνιστούν δέσμευση της Εταιρείας. Συνεπώς θα υπόκεινται σε αυξομειώσεις, οι οποίες μπορούν να προκύψουν είτε λόγω σφαλμάτων, είτε λόγω μεταβολών, τις οποίες η Εταιρεία δικαιούται να επιφέρει, σύμφωνα με τις διατάξεις της παρούσας Σύμβασης.
Οι πληρωμές θα γίνονται μόνο για τις πραγματικά εκτελεσθείσες ποσότητες εργασιών.
Τα ποσά που ο Αντισυμβαλλόμενος δικαιούται να εισπράξει βάσει της παρούσας Σύμβασης υπολογίζονται ως άθροισμα:

- Των ποσών που προκύπτουν από την πρόσθεση των γινομένων ποσοτήτων των επί μέρους εργασιών, όπως αυτές τελικά θα καθοριστούν στις εγκεκριμένες τελικές επιμετρήσεις, επί τις αντίστοιχες τιμές μονάδας του Τιμολογίου ή τις τιμές μονάδας νέων εργασιών και
- Των ποσών που προκύπτουν από την πρόσθεση των γινομένων ποσοστών των επί μέρους εργασιών που εκτελέσθηκαν, όπως τα ποσοστά αυτά καθορίζονται στις εγκεκριμένες τελικές επιμετρήσεις, επί τις αντίστοιχες κατ' αποκοπή τιμές.

3.4 Το Συμβατικό Τίμημα σταθερό και δεν υπόκειται σε οποιαδήποτε αναθεώρηση.

3.5 Στο Συμβατικό Τίμημα περιλαμβάνονται όλες οι δαπάνες και επιβαρύνσεις που αναφέρονται στα Άρθρα 17 και 19 των Γενικών Όρων.

Άρθρο 4
Δικαιώματα Προαίρεσης

Η ΔΕΗ Α.Ε. διατηρεί το δικαίωμα πριν, κατά ή μετά την ανάθεση της παροχής υπηρεσίας, να μειώσει το αντικείμενο της Σύμβασης υπό την προϋπόθεση ότι η διαφοροποίηση του συνολικού τιμήματος ανάθεσης δεν υπερβαίνει το 30% στη μείωση χωρίς ο Αντισυμβαλλόμενος να δικαιούται οποιαδήποτε αποζημίωση, σύμφωνα με τα οριζόμενα στο άρθρο 4 του Συμφωνητικού.

Άρθρο 5
Τρόπος Πληρωμής

Με τις προϋποθέσεις του Άρθρου 26 των Γενικών Όρων Σύμβασης και του Άρθρου 15 των Ειδικών Όρων Σύμβασης οι πληρωμές προς τον Αντισυμβαλλόμενο θα γίνονται ως εξής:

5.1 Οι πληρωμές των εργασιών που εκτελεί ο Αντισυμβαλλόμενος, και των αντίστοιχων αναθεωρήσεων, θα γίνονται με τις μηνιαίες πιστοποιήσεις.

5.2 Σε κάθε πληρωμή λογαριασμών εργασιών και αναθεωρήσεων προς τον Αντισυμβαλλόμενο διενεργούνται κρατήσεις για Εγγύηση Καλής Εκτέλεσης, σύμφωνα με τα προβλεπόμενα στην παράγραφο 17.6 των Γενικών Όρων Σύμβασης. Οι κρατήσεις αυτές ορίζονται σε **τρία τοις εκατό (3%)** στην πιστοποιούμενη αξία κάθε πληρωμής.

5.3 Οι παραπάνω κρατήσεις δύνανται να αντικατασταθούν με ισόποσες Εγγυητικές Επιστολές Ανάληψης Κρατήσεων μετά την αποδοχή εκ μέρους της ΔΕΗ της αίτησης του Αντισυμβαλλόμενου για την Προσωρινή Παραλαβή του αντικειμένου
Οι Εγγυητικές αυτές Επιστολές επιστρέφονται μαζί με τις Εγγυητικές Επιστολές Καλής Εκτέλεσης, σύμφωνα με τα οριζόμενα στο Άρθρο 17 των Γενικών Όρων Σύμβασης.

Άρθρο 6
Προθεσμίες Πέρατος - Πρόγραμμα Εκτέλεσης αντικειμένου

6.1 Προθεσμίες πέρατος αντικειμένου

Ο Αντισυμβαλλόμενος αναλαμβάνει την υποχρέωση να τηρήσει τις προθεσμίες που καθορίζονται πιο κάτω. Όλες οι προθεσμίες μετριούνται από την ημερομηνία θέσης σε ισχύ της Σύμβασης.

6.1.1 Τμηματικές προθεσμίες

6.1.1.1 Οι εργασίες που αφορούν τη συντήρηση της τροφοδοτικής αντλίας Υ.Π. τύπου 6x14WXH10 θα πραγματοποιηθούν εντός 22 ημερολογιακών ημερών.
Οι εργασίες της παραγράφου 1.1. της Τεχνικής Περιγραφής αναμένεται να εκτελεσθούν από 03/10/2022 έως και 22/10/2022 παρουσία τεχνικού της Εταιρείας.
Για την ακριβή ημερομηνία έναρξης ο Αντισυμβαλλόμενος θα ενημερωθεί τουλάχιστον δέκα (10) ημέρες νωρίτερα. Εντός του παραπάνω χρονικού διαστήματος οφείλει να κινητοποιηθεί.
Οι τμηματικές προθεσμίες εκτέλεσης των εργασιών στα επιμέρους αντλητικά συγκροτήματα καθορίζονται στην παράγραφο 1.1 της Τεχνικής Περιγραφής και στο αναλυτικό πρόγραμμα που θα καθορισθεί.

6.1.1.2 Οι εργασίες που αφορούν τη συντήρηση της αντλίας συμπυκνώματος τύπου 243-APKD-4 θα πραγματοποιηθούν εντός 12 ημερολογιακών ημερών.
Οι εργασίες για την πρώτη αντλία θα εκτελεσθούν από 28/09/2022 έως και 08/10/2022 ενώ για τη δεύτερη αντλία θα εκτελεσθούν από 12/11/2022 έως και 23/11/2022.
Για την ακριβή ημερομηνία έναρξης ο Αντισυμβαλλόμενος θα ενημερωθεί τουλάχιστον δέκα (10) ημέρες νωρίτερα. Εντός του παραπάνω χρονικού διαστήματος οφείλει να κινητοποιηθεί.
Οι τμηματικές προθεσμίες εκτέλεσης των εργασιών στα επιμέρους αντλητικά συγκροτήματα καθορίζονται στην παράγραφο 1.2 της Τεχνικής Περιγραφής και στο αναλυτικό πρόγραμμα που θα καθορισθεί.

6.1.1.3 Οι εργασίες που αφορούν τη συντήρηση της αντλίας κυκλοφορίας θαλάσσης τύπου 45ΑΡΜΑ θα πραγματοποιηθούν εντός 15 ημερολογιακών ημερών.
Οι εργασίες για την πρώτη αντλία θα εκτελεσθούν από 08/10/2022 έως και 21/10/2022 ενώ για τη δεύτερη από 03/11/2022 έως και 16/11/2022.
Για την ακριβή ημερομηνία έναρξης ο Αντισυμβαλλόμενος θα ενημερωθεί τουλάχιστον δέκα (10) ημέρες νωρίτερα. Εντός του παραπάνω χρονικού διαστήματος οφείλει να κινητοποιηθεί.
Οι τμηματικές προθεσμίες εκτέλεσης των εργασιών στα επιμέρους αντλητικά συγκροτήματα καθορίζονται στην παράγραφο 1.3 της Τεχνικής Περιγραφής και στο αναλυτικό πρόγραμμα που θα καθορισθεί.

6.1.1.4 Οι εργασίες που αφορούν τη συντήρηση της τροφοδοτικής αντλίας Μέσης Πίεσης τύπου 3x11WXH5 θα πραγματοποιηθούν εντός 10 ημερολογιακών ημερών.
Οι εργασίες για την πρώτη αντλία θα εκτελεσθεί από 24/10/2022 έως και 03/11/2022 ενώ για τη δεύτερη αντλία από 09/11/2022 έως και 19/11/2022.
Για την ακριβή ημερομηνία έναρξης ο Αντισυμβαλλόμενος θα ενημερωθεί τουλάχιστον δέκα (10) ημέρες νωρίτερα. Εντός του παραπάνω χρονικού διαστήματος οφείλει να κινητοποιηθεί.
Οι τμηματικές προθεσμίες εκτέλεσης των εργασιών στα επιμέρους αντλητικά συγκροτήματα καθορίζονται στην παράγραφο 1.4 της Τεχνικής Περιγραφής και στο αναλυτικό πρόγραμμα που θα καθορισθεί.

6.1.2 Συνολική προθεσμία
Το σύνολο των υπηρεσιών θα εκτελεσθούν συνολικά σε εξήντα (60) ημερολογιακές ημέρες. Η ημερομηνία έναρξης υπηρεσιών είναι η ημερομηνία παραλαβής της πρώτης αντλίας από τις εγκαταστάσεις της ΔΕΗ. Στο χρόνο εκτέλεσης των εργασιών δεν συμπεριλαμβάνονται χρόνοι παράδοσης στρατηγικών ανταλλακτικών από πλευράς ΔΕΗ ή αποκατάστασης μη αναμενόμενων βλαβών που περιγράφονται στη Τεχνική Περιγραφή ή στο manual του κατασκευαστή των αντλιών.

6.2 Πρόγραμμα Εκτέλεσης Σύμβασης

6.2.1 Το Αναλυτικό χρονοδιάγραμμα εργασιών ανά Προγραμματισμένη Συντήρηση θα εκδοθεί από την επιβλέπουσα Διεύθυνση και θα γνωστοποιηθεί στον Αντισυμβαλλόμενο τουλάχιστον μία (1) εβδομάδα πριν την έναρξη των εργασιών.

6.2.2 Το εγκεκριμένο από την Εταιρεία χρονοδιάγραμμα μαζί με τα παραπάνω στοιχεία αποτελούν το Πρόγραμμα Εκτέλεσης της Σύμβασης.

Άρθρο 7
Ποινικές Ρήτρες

7.1 Πλέον των αναφερομένων στο Άρθρο 33 των Γενικών Όρων Σύμβασης ρητά συμφωνείται ότι οι Ποινικές Ρήτρες οφείλονται και πληρώνονται στη ΔΕΗ κεχωρισμένα και αθροιστικά, ανεξάρτητα αν η Εταιρεία έχει υποστεί ζημιές, και ότι οι Ποινικές Ρήτρες του παρόντος Άρθρου είναι εύλογες και δίκαιες.

Οι Ποινικές Ρήτρες που μπορεί να επιβληθούν περιγράφονται αναλυτικά στις επόμενες παραγράφους.

7.2 Ποινικές Ρήτρες για καθυστερήσεις

7.2.1 Για κάθε ημερολογιακή ημέρα υπέρβασης κάθε τμηματικής προθεσμίας πέρατος, που ορίζεται στο Άρθρο 6 του παρόντος, από υπαιτιότητα του Αντισυμβαλλόμενου, ο Αντισυμβαλλόμενος έχει την υποχρέωση να καταβάλει Ποινική Ρήτρα ίση με το ένα τοις εκατό (1%) της αξίας της μη εκτελεσθείσας, και ως εκ τούτου μη πιστοποιηθείσας εργασίας.

7.2.2 Για κάθε ημερολογιακή ημέρα υπέρβασης της συνολικής προθεσμίας πέρατος, που ορίζεται στο Άρθρο 6 του παρόντος, εξ υπαιτιότητας του Αντισυμβαλλόμενου, ο Αντισυμβαλλόμενος έχει την υποχρέωση να καταβάλει Ποινική Ρήτρα ίση με το μισό τοις εκατό (0.5%).

7.2.3 Το σύνολο των παραπάνω Ποινικών Ρητρών για καθυστερήσεις δεν μπορεί να υπερβεί το δέκα τοις εκατό (10%) του Συμβατικού Τιμήματος προσαυξημένου με τα τιμήματα των τυχόν προσθέτων εργασιών και των συμπληρωμάτων της Σύμβασης και με τις αναθεωρήσεις.

7.2.4 Οι Ποινικές Ρήτρες για καθυστερήσεις επιβάλλονται από την Επιβλέπουσα Υπηρεσία. Έναντι αυτών η ΔΕΗ προβαίνει σε ισόποσες παρακρατήσεις από επόμενες, μετά την επιβολή τους, πληρωμές προς τον Αντισυμβαλλόμενο. Η οριστική εκκαθάριση των Ποινικών Ρητρών διενεργείται το αργότερο μέχρι την προσωρινή παραλαβή του αντικειμένου.

7.2.5 Εφόσον, εκκρεμεί αίτηση του Αντισυμβαλλόμενου για χορήγηση παράτασης προθεσμίας με βάση τις διατάξεις των Γενικών Όρων, η Προϊσταμένη Υπηρεσία μπορεί να αναστείλει την παρακράτηση έναντι της αντίστοιχης Ποινικής Ρήτρας μέχρι να εκδοθεί η τελική απόφαση από το αρμόδιο όργανο της Εταιρείας.

7.3 Ποινικές Ρήτρες για τεχνικές αποκλίσεις

Σε περίπτωση που διαπιστωθεί πρόβλημα λειτουργίας που παρεμποδίζει την εκμετάλλευση της αντλίας και ο Αντισυμβαλλόμενος δεν το αποκαταστήσει κατά τη διάρκεια του πρώτου μήνα κανονικής λειτουργίας της Μονάδας ή εντός μίας εβδομάδας από την αιτία κράτησης της αντλίας θα επιβάλλονται τεχνικές ποινικές ρήτρες.

Σε περίπτωση αστοχίας λειτουργίας της αντλίας λόγω κακοτεχνίας του Αντισυμβαλλόμενου εντός της περιόδου εγγυήσεως θα επιβάλλονται τεχνικές ποινικές ρήτρες.

7.4 Όλες οι πιο πάνω Ποινικές Ρήτρες για καθυστερήσεις, και άλλες αιτίες , σε καμιά περίπτωση δεν μπορεί να υπερβούν το δεκαπέντε τοις εκατό (15%) του Συμβατικού Τιμήματος, προσαυξημένου με το τίμημα των τυχόν πρόσθετων εργασιών και των Συμπληρωμάτων της Σύμβασης και με τις αναθεωρήσεις.

Άρθρο 8
Εγγυήσεις Εκτέλεσης της Σύμβασης

8.1 Ο Αντισυμβαλλόμενος ως Εγγύηση Καλής Εκτέλεσης κατέθεσε στην Εταιρεία σήμερα, την Εγγυητική Επιστολή αριθμός ……. που εξέδωσε…… για το ποσό των …… Ευρώ που αντιστοιχεί στο τέσσερα τοις εκατό (4%) του Συμβατικού Τιμήματος και έχει διάρκεια δέκα οχτώ (18) μήνες από την ημερομηνία θέσης σε ισχύ της Σύμβασης

8.2 Οι Εγγυητικές Επιστολές Καλής Εκτέλεσης επιστρέφονται στον Αντισυμβαλλόμενο μετά την Οριστική Παραλαβή του αντικειμένου της Σύμβασης.

8.3 Για οποιαδήποτε αύξηση του Συμβατικού Τιμήματος και εφόσον μια ή περισσότερες αυξήσεις μαζί υπερβαίνουν το δέκα τοις εκατό (10%) αυτού, ο Αντισυμβαλλόμενος υποχρεούται να καταθέσει συμπληρωματική Εγγυητική Επιστολή Καλής Εκτέλεσης η αξία της οποίας θα αντιστοιχεί στο σύνολο της επαύξησης του Συμβατικού τιμήματος.

Άρθρο 9 [1]
Ευθύνη Ένωσης/Σύμπραξης [2]

9.1 Συμφωνείται ρητά ότι όλα τα μέλη της Σύμπραξης ενέχονται και ευθύνονται έναντι της Εταιρείας ενιαία, αδιαίρετα, αλληλέγγυα, και σε ολόκληρο το κάθε ένα χωριστά για την εκπλήρωση των πάσης φύσεως υποχρεώσεων που αναλαμβάνει η Σύμπραξη με την παρούσα Σύμβαση.

9.2 Συμφωνείται επίσης ότι θα εκπροσωπούνται με κοινό εκπρόσωπο και σε όλη τη διάρκεια ισχύος της Σύμβασης και θα ελέγχεται από την Εταιρεία η ουσιαστική συμμετοχή στην Σύμπραξη όλων των μελών αυτής σύμφωνα με το προβλεπόμενο έγγραφο σύστασης της Σύμπραξης.

Άρθρο 10 [3]
Εγγυήσεις αναφορικά με επίκληση ικανοτήτων Τρίτου

……[4]……
……[5]……

Ο Αντισυμβαλλόμενος είναι υπεύθυνος για κάθε ενέργεια, πράξη ή παράλειψη του Τρίτου, σύμφωνα με τις διατάξεις του Άρθρου 10 των Γενικών Όρων. Σε περίπτωση που ο Τρίτος δεν εκπληρώσει τις υποχρεώσεις του προς τον Αντισυμβαλλόμενο, σε σχέση με το αντικείμενο, η ΔΕΗ έχει το δικαίωμα να κάνει χρήση των προβλέψεων των Άρθρων 21 και 25 των Γενικών Όρων.

Άρθρο 11
Ισχύς της Σύμβασης

Η Σύμβαση τίθεται σε ισχύ από……

Η Παρούσα Σύμβαση υπογράφεται σε δύο πρωτότυπα από τα οποία το ένα πήρε η Εταιρεία και το άλλο ο Αντισυμβαλλόμενος.

ΟΙ ΣΥΜΒΑΛΛΟΜΕΝΟΙ

ΓΙΑ ΤΟΝ ΑΝΤΙΣΥΜΒΑΛΛΟΜΕΝΟ ΓΙΑ ΤΗΝ ΕΤΑΙΡΕΙΑ

ΟΔΗΓΙΕΣ

[1] Κατά την κατάρτιση των Τευχών της Σύμβασης το Άρθρο αυτό θα παραλείπεται εφόσον ο Αντισυμβαλλόμενος δεν είναι Σύμπραξη Επιχειρήσεων και τα επόμενα Άρθρα θα αναριθμούνται κατάλληλα

[2] Η διατύπωση του παρόντος Άρθρου θα προσαρμόζεται κατά την κατάρτιση των Τευχών της Σύμβασης με τη νομική μορφή (π.χ. Κοινοπραξία) που φέρει ο Αντισυμβαλλόμενος (είτε αφ' εαυτού είτε με βάση ρητή απαίτηση της Πρόσκλησης)

[3] Κατά την κατάρτιση των Τευχών της Σύμβασης το Άρθρο αυτό θα παραλείπεται εφόσον ο Αντισυμβαλλόμενος δεν έχει επικαλεστεί χρηματοοικονομική, τεχνική ή /και επαγγελματική ικανότητα τρίτου και τα επόμενα Άρθρα θα αναριθμούνται κατάλληλα

[4] Καταγράφονται η επωνυμία και ο νόμιμος εκπρόσωπος του/των παρεχόντων τη στήριξη στον Αντισυμβαλλόμενο, το αντικείμενο της υποστήριξης, ο τρόπος συνεργασίας μεταξύ του Αντισυμβαλλόμενου και του τρίτου, καθώς και οι παρασχεθείσες από αυτόν/ους προς τον Αντισυμβαλλόμενο εγγυήσεις

[5] Εφόσον η επίκληση της ικανότητας αφορά σε κάλυψη κριτηρίων επιλογής σχετικά με τη διάθεση τεχνικής ή επαγγελματικής ικανότητας (π.χ. εμπειρία επιτυχούς υλοποίησης ίδιου ή όμοιου αντικειμένου, διάθεση πιστοποιημένου προσωπικού, διάθεση εγκαταστάσεων ή/και εξοπλισμού) προστίθενται κατάλληλα προσαρμοσμένα τα ακόλουθα:

- ο/οι παρέχων/οντες την ως άνω στήριξη θα εκτελέσει/ουν το αντικείμενο της σύμβασης για το οποίο παρέχει/ουν τις συγκεκριμένες ικανότητες. Η αντικατάσταση οποιουδήποτε παράγοντα της παρεχόμενης στήριξης υπόκειται στην έγκριση της ΔΕΗ υπό την έννοια ότι ο προτεινόμενος αντικαταστάτης πρέπει να πληροί ισοδύναμα τα κριτήρια επιλογής του αντικαθιστάμενου. Η αντικατάσταση του παρέχοντος τη στήριξη οικονομικού φορέα συνιστά ουσιώδη τροποποίηση της σύμβασης η αναγκαιότητα της οποίας ελέγχεται και υπόκειται επίσης στην έγκριση της ΔΕΗ. Εάν αυτή εγκριθεί ο αντικαταστάτης πρέπει να πληροί ισοδύναμα τα κριτήρια επιλογής του αντικαθιστάμενου αλλά και να αποδείξει τη μη συνδρομή των λόγων αποκλεισμού όπως έπραξε ο αντικαθιστάμενος κατά τη φάση της κατακύρωσης της σύμβασης»

Αριθμός Πρόσκλησης : **ΔΠΛΠ 1668**

Αντικείμενο: «Μηχανουργική υποστήριξη συντήρησης συγκροτημάτων μέσης ισχύος μονάδας V ΑΗΣ Κερατέας-Λαυρίου»

ΕΙΔΙΚΟΙ ΟΡΟΙ ΣΥΜΒΑΣΗΣ ΥΠΗΡΕΣΙΩΝ ΣΥΝΤΗΡΗΣΗΣ

ΤΕΥΧΟΣ 3 ΑΠΟ 7

ΕΙΔΙΚΟΙ ΟΡΟΙ ΥΠΗΡΕΣΙΩΝ ΣΥΝΤΗΡΗΣΗΣ

Άρθρο 1
Σχέδια και Οδηγίες

1.1 Για την υπόψη συντήρηση τα αναφερόμενα στην Τεχνική Περιγραφή σχέδια, θα χορηγούνται από την Επιβλέπουσα Διεύθυνση της Εταιρείας στον Αντισυμβαλλόμενο.

1.2 Η χορήγηση στον Αντισυμβαλλόμενο τυχόν σχεδίων ή οδηγιών που αναφέρονται στη Τεχνική Περιγραφή ύστερα από αίτημα του θα γίνει εντός τριών (3) ημερών.

Άρθρο 2
Ισχύοντα Πρότυπα και Κανονισμοί

Τα πρότυπα και οι κανονισμοί με βάση τα οποία θα γίνουν οι εργασίες είναι κατά περίπτωση εφαρμογής: ASME, TRD, VGB, DIN, AD, MERCKBLATTER και γενικά όλοι οι κανονισμοί και τα πρότυπα που ισχύουν σήμερα στην Ελλάδα.
Από τα πρότυπα αυτά και τους Κανονισμούς θα ισχύει η τελευταία αναθεώρηση ή έκδοση τους, που έγινε πριν από την ημερομηνία υπογραφής της Σύμβασης Έργου.

Άρθρο 3
Εκπροσώπηση της Εταιρείας

Καθήκοντα Επιβλέπουσας Διεύθυνσης της Εταιρείας θα ασκεί ο Τομέας Συντήρησης του ΑΗΣ Κερατέας-Λαυρίου και Προϊσταμένης Διεύθυνσης της Εταιρείας ο Διευθυντής του Σταθμού σύμφωνα με το Άρθρο 3 των Γενικών Όρων .

Άρθρο 4
Εκπροσώπηση του Αντισυμβαλλόμενο

Κατά την υπογραφή της Σύμβασης ο Αντισυμβαλλόμενος γνωστοποιεί εγγράφως στην Εταιρεία τον κύριο εκπρόσωπό του, ο οποίος θα είναι νόμιμα εξουσιοδοτημένος να τον εκπροσωπεί σε όλα τα θέματα που αφορούν την εκτέλεση της Σύμβασης και να προβαίνει εξ ονόματός του στην τακτοποίηση όλων των διαφορών και διαφωνιών που ενδεχομένως θα αναφύονται.

Ως εκπρόσωπος κατά τα ως άνω του Αντισυμβαλλόμενου ορίζεται ο/η:

Ονοματεπώνυμο : .....

Τίτλος : .....

Διεύθυνση: .....

Τηλέφωνο: .....

Φαξ: .....

e-mail: .....

Άρθρο 5
Εξοπλισμός και υλικά που χορηγεί η Εταιρεία

Ο ΑΗΣ Κερατέας – Λαυρίου θα διαθέσει στον Αντισυμβαλλόμενο τον αναλώσιμα, στρατηγικά ανταλλακτικά και τα υλικά για την εκτέλεση των εργασιών όπως αναφέρονται στην Τεχνική Περιγραφή. Οποιοσδήποτε εξοπλισμός ή υλικά, πέραν των προβλεπόμενων από την τεχνική περιγραφή, απαιτηθούν για την έγκαιρη, έντεχνη, εμπρόθεσμη και ασφαλή εκτέλεσή τους θα διατίθενται από τον Αντισυμβαλλόμενο.

Άρθρο 6
Υπεργολάβοι – Υποπρομηθευτές - Συνεργασία Αντισυμβαλλόμενου με Τρίτους

Θα καταγραφούν στο παρόν άρθρο οι τυχόν προταθέντες από τον Αντισυμβαλλόμενο υπεργολάβοι που θα έχουν τύχει της εγκρίσεως της Εταιρείας κατά τη διαδικασία επιλογής καθώς και τυχόν αναγκαίες συμπληρώσεις ή τροποποιήσεις των αναφερομένων στο Άρθρο 5 των Γενικών Όρων της Σύμβασης. Άλλως θα αναγράφεται: «Ισχύουν τα αναφερόμενα στο Άρθρο 5 των Γενικών Όρων της Σύμβασης».

Επίσης, θα καταγράφονται οι τυχόν προταθέντες από τον Αντισυμβαλλόμενο τρίτοι οι οποίοι θα παράσχουν στήριξη ή θα συνεργαστούν με οποιοδήποτε τρόπο με τον Αντισυμβαλλόμενο για την υλοποίηση της Σύμβασης που θα έχουν τύχει της εγκρίσεως της Εταιρείας κατά τη διαδικασία επιλογής. Στις περιπτώσεις αυτές θα προστίθεται ο ακόλουθος όρος:

Ο Αντισυμβαλλόμενος είναι ο μόνος και αποκλειστικά υπεύθυνος έναντι των Συνεργατών του για την υλοποίηση των υπηρεσιών σύμφωνα με το νόμο, τους ισχύοντες κανόνες δεοντολογίας και φέρει το βάρος σχετικά με οποιαδήποτε αμοιβή των Συνεργατών του και σχετικά με την εκπλήρωση κάθε ανεξαιρέτως υποχρέωσης έναντι του Δημοσίου, ασφαλιστικών ταμείων και τρίτων εν γένει, αναφορικά με τους Συνεργάτες του. Επίσης, ο Αντισυμβαλλόμενος είναι ο μόνος υπεύθυνος για κάθε ζημία ή βλάβη τυχόν προκαλέσουν σε οποιονδήποτε οι Συνεργάτες του κατά την εκτέλεση της παρούσας.

Άρθρο 7
Προσωπικό Αντισυμβαλλόμενου

Καταγράφονται οι τυχόν ειδικές υποχρεώσεις του Αντισυμβαλλόμενου, πέραν των αναφερομένων στα Άρθρα 8 και 10 των Γενικών Όρων Σύμβασης, για το προσωπικό του, όπως :

- σύνθεση και στελέχωση της Ομάδας παροχής υπηρεσιών και του υπεύθυνου υπηρεσιών που έχουν αξιολογηθεί κατά τη διαδικασία επιλογής και πρόβλεψη αντικατάστασης αυτών με στελέχη που διαθέτουν ισοδύναμα ή ανώτερα προσόντα.
- εκπαίδευση προσωπικού, ελάχιστα προσόντα προσωπικού

Άρθρο 8
Ευθύνες Αντισυμβαλλόμενου

8.1 Οψιγενείς μεταβολές

8.1.1 Ο Αντισυμβαλλόμενος δεσμεύεται ότι σε περίπτωση οψιγενούς μεταβολής, κατά τη διάρκεια ισχύος της παρούσας Σύμβασης, οποιουδήποτε στοιχείου αναφορικά με τις προϋποθέσεις για τη μη συνδρομή λόγων αποκλεισμού, που ο Αντισυμβαλλόμενος είχε δηλώσει ότι πληροί ή/και είχε προσκομίσει τα σχετικά αποδεικτικά πλήρωσης αυτών στο πλαίσιο της προηγηθείσας διαδικασίας επιλογής μέχρι και τη σύναψη της παρούσας Σύμβασης, να γνωστοποιήσει στη ΔΕΗ αμελλητί την υπόψη μεταβολή, άλλως η ΔΕΗ θα δύναται να εφαρμόσει το Άρθρο 25.1 των Γενικών Όρων περί καταγγελίας της Σύμβασης με υπαιτιότητα του Αντισυμβαλλόμενου.
Τα πιο πάνω ισχύουν και στην περίπτωση μη τήρησης της παραπάνω υποχρέωσης για τον/τους παρέχοντα/ες στήριξη στον Αντισυμβαλλόμενο.

8.1.2 Ρητά καθορίζεται ότι εάν ο Αντισυμβαλλόμενος:

- δεν προσκομίσει έγκαιρα και προσηκόντως επιβεβαιωτικά έγγραφα περί μη συνδρομής λόγων αποκλεισμού, οποτεδήποτε απαιτηθούν αυτά από την Εταιρεία,

- έχει υποβάλει οποτεδήποτε, ανακριβείς ή ψευδείς δηλώσεις ή αλλοιωμένα φωτοαντίγραφα δημοσίων ή ιδιωτικών εγγράφων,

τότε η ΔΕΗ δύναται να εφαρμόσει το Άρθρο 25.1 των Γενικών Όρων περί καταγγελίας της Σύμβασης με υπαιτιότητα του Αντισυμβαλλόμενου και διατηρεί το δικαίωμα αποκλεισμού του από μελλοντικές διαδικασίες επιλογής Αντισυμβαλλόμενων.

8.2 Τήρηση εργατικής, ασφαλιστικής και περιβαλλοντικής νομοθεσίας

8.2.1 Ο Αντισυμβαλλόμενος θα είναι πλήρως και αποκλειστικά μόνος υπεύθυνος έναντι της ΔΕΗ, για την απαρέγκλιτη τήρηση της ισχύουσας εργατικής και ασφαλιστικής νομοθεσίας ως προς το απασχολούμενο από αυτόν ή από Υπεργολάβους του προσωπικό, καθώς και των τυχόν συνεργαζόμενων με αυτούς τρίτους με οποιαδήποτε σχέση εργασίας στο πλαίσιο της εκπλήρωσης των υποχρεώσεων της Σύμβασης.

8.2.2 Ο Αντισυμβαλλόμενος και οι Υπεργολάβοι υποχρεούνται να τηρούν απαρεγκλίτως τις διατάξεις τις εργατικής και ασφαλιστικής νομοθεσίας για το προσωπικό τους που θα απασχολείται στο πλαίσιο της Σύμβασης στις εγκαταστάσεις της ΔΕΗ, συμπεριλαμβανομένων της καταβολής στο προσωπικό τους των νομίμων αποδοχών, οι οποίες σε καμία περίπτωση δεν μπορεί να είναι κατώτερες των προβλεπόμενων από την οικεία σύμβαση εργασίας, της τήρησης του νομίμου ωραρίου, της καταβολής των εκ του νόμου προβλεπόμενων ασφαλιστικών εισφορών του προσωπικού τους, της αυστηρής τήρησης των όρων υγείας και ασφάλειας των εργαζομένων κ.λπ.
Ο Αντισυμβαλλόμενος υπέχει τις παραπάνω έναντι της ΔΕΗ υποχρεώσεις, τόσο για το προσωπικό που ο ίδιος θα απασχολεί για την εκτέλεση της Σύμβασης, όσο και για το προσωπικό των τυχόν υπεργολάβων του, υποσχόμενος και εγγυώμενος την ορθή τήρησή τους και εκ μέρους των τυχόν υπεργολάβων του.

8.2.3 Επισημαίνεται ότι σε περίπτωση μη τήρησης από τον Αντισυμβαλλόμενο των υποχρεώσεών του σε θέματα Υγείας και Ασφάλειας στην Εργασία, η Εταιρεία διατηρεί το δικαίωμα να επιβάλει τη διακοπή των παρεχόμενων υπηρεσιών με ευθύνη του Αντισυμβαλλόμενου, ο οποίος σε κάθε περίπτωση υποχρεούται να καλύψει με δαπάνες του οποιαδήποτε σχετική οικονομική επιβάρυνσή της (επιβολή προστίμων, δαπάνες αποκατάστασης, αποζημιώσεις υπέρ τρίτων κ.λπ.).
Οι πιο πάνω ευθύνες του Αντισυμβαλλόμενου δεν είναι περιοριστικές και δεν μειώνεται καθ' οιονδήποτε τρόπο η αποκλειστική του ευθύνη, ως εργοδότη, στα θέματα Υγείας και Ασφάλειας του προσωπικού του και των τυχόν υπεργολάβων του.

8.2.4 Ο Αντισυμβαλλόμενος υποχρεούται να συμμορφώνεται με την ισχύουσα εθνική και ενωσιακή περιβαλλοντική νομοθεσία.
Ο Αντισυμβαλλόμενος είναι αποκλειστικά υπεύθυνος για την προστασία του περιβάλλοντος κατά την παροχή των υπηρεσιών της Σύμβασης και δεν μειώνεται καθ' οιονδήποτε τρόπο η ευθύνη του αυτή.

8.3 Κοινοποίηση στοιχείων στις αρμόδιες αρχές

Η ΔΕΗ διατηρεί το δικαίωμα να αποστείλει αντίγραφο της Σύμβασης, καθώς και τα στοιχεία του απασχολούμενου στο πλαίσιο της Σύμβασης στις εγκαταστάσεις της Εταιρείας προσωπικού του Αντισυμβαλλόμενου ή/και του Υπεργολάβου, στο κατά τόπο αρμόδιο Τμήμα Κοινωνικής Επιθεώρησης του Σώματος Επιθεώρησης Εργασίας (ΣΕΠΕ), καθώς και στον Ενιαίο Φορέα Κοινωνικής Ασφάλισης (ΕΦΚΑ), προκειμένου να ελεγχθεί η απαρέγκλιτη τήρηση της Εργατικής και Ασφαλιστικής νομοθεσίας.

Άρθρο 9
Τρόπος Πληρωμής - Δικαιολογητικά

Πέραν των αναφερομένων στο Άρθρο 5 του Συμφωνητικού για τη σύνταξη των πιστοποιήσεων, τις πληρωμές και τα απαιτούμενα δικαιολογητικά, ισχύουν τα ακόλουθα:

9.1 Οι πληρωμές θα γίνονται μόνο για τις πραγματικά παρασχεθείσες από τον Αντισυμβαλλόμενο και πιστοποιηθείσες από τη ΔΕΗ υπηρεσίες.
Για την πληρωμή των παρασχεθεισών υπηρεσιών απαιτείται:

9.1.1 Εγκεκριμένη από την αρμόδια Διεύθυνση της ΔΕΗ πιστοποίηση παροχής των υπηρεσιών, σύμφωνα με τους όρους της Σύμβασης.
Η Επιβλέπουσα Διεύθυνση της ΔΕΗ εκδίδει Εντολή Αγοράς στο SAP, σύμφωνα με την εγκεκριμένη πιστοποίηση, η οποία αποστέλλεται στον Αντισυμβαλλόμενο.

9.1.2 Μετά την ως άνω πιστοποίηση ο Αντισυμβαλλόμενος εκδίδει και προσκομίζει στη ΔΕΗ Τιμολόγιο, σύμφωνα με την ισχύουσα φορολογική νομοθεσία και εντός της προβλεπόμενης από αυτή προθεσμίας, στο οποίο αναγράφεται ο αριθμός SAP της Σύμβασης και της Εντολής Αγοράς στην οποία αναφέρεται το τιμολόγιο.

9.2 Έκαστο τιμολόγιο θα εκδίδεται στο όνομα της ΔΕΗ και μαζί με την αντίστοιχη πιστοποίηση συνοδευόμενη με αντίγραφο της εντολής αγοράς θα υποβάλλονται από τον Αντισυμβαλλόμενο στην αρμόδια Διεύθυνση με διαβιβαστική επιστολή, στην οποία θα αναφέρονται αναλυτικά τα επισυναπτόμενα έγγραφα.

9.3 Δήλωση του νόμιμου εκπροσώπου του Αντισυμβαλλόμενου με την οποία θα βεβαιώνεται ότι έχουν τηρηθεί απαρεγκλίτως οι διατάξεις της Εργατικής και Ασφαλιστικής Νομοθεσίας για το απασχολούμενο προσωπικό από αυτόν ή/και τον Υπεργολάβο του για την περίοδο αναφοράς του τιμολογίου.

9.4 Κάθε έγγραφο που δύναται να αποδείξει την τήρηση της εργατικής και ασφαλιστικής νομοθεσίας για το προσωπικό που απασχολήθηκε την περίοδο αναφοράς του τιμολογίου, το οποίο τυχόν θα ζητηθεί από τα αρμόδια όργανα της ΔΕΗ.

9.5 Οι πληρωμές θα γίνονται την εξηκοστή (60η) ημέρα από την ημερομηνία έκδοσης του Τιμολογίου εφόσον:

α. το τιμολόγιο συνοδεύεται από την αντίστοιχη πιστοποίηση της πιο πάνω παραγράφου 9.1.1,
β. έχουν υποβληθεί η Δήλωση της παραγράφου 6.3 και τα αποδεικτικά της πιο πάνω παραγράφου 9.4,

Σε περίπτωση που ο Αντισυμβαλλόμενος δεν τηρήσει τις ως άνω προθεσμίες και καθυστερεί στην προσκόμιση των δικαιολογητικών αυτών, η ως άνω προθεσμία παρατείνεται ισόχρονα με την καθυστέρηση.

Επιπρόσθετα παρέχεται η δυνατότητα (μόνο για τις συμβάσεις οι οποίες δεν έχουν εκχωρηθεί) να δοθεί στον Αντισυμβαλλόμενο ο αναλογών ΦΠΑ το αργότερο πέντε (5) ημέρες πριν από την υποχρέωση καταβολής του, εφόσον ο Αντισυμβαλλόμενος συμφωνήσει για παράταση της προθεσμίας πληρωμής του τιμήματος της τιμολογούμενης αξίας κατά τριάντα (30) ημέρες επιπλέον της αναφερόμενης πιο πάνω προθεσμίας.
Σε περίπτωση αργίας κατά την πιο πάνω οριζόμενη ημέρα πληρωμής, ως ημερομηνία εξόφλησης των τιμολογίων θα θεωρείται η αμέσως επομένη εργάσιμη ημέρα.

Η αμοιβή καταβάλλεται στον Αντισυμβαλλόμενο σε πλήρη και ολοσχερή εξόφλησή του, συμπεριλαμβανόμενων όλων των δαπανών στις οποίες προέβη σε σχέση με την εκτέλεση της παρούσας Σύμβασης.

Άρθρο 10
Τροποποιήσεις Σύμβασης κατά τη διάρκειά της

Η μεταβολή (αύξηση ή μείωση) του συνολικού συμβατικού τιμήματος σύμφωνα με τις παραγράφους 14.2.2 και 14.2.3 των Γενικών Όρων δεν μπορεί να υπερβεί το τριάντα τοις εκατό (30%) αυτού. Για τις

μεταβολές αυτές ο Αντισυμβαλλόμενος δεν έχει το δικαίωμα να ζητήσει αύξηση των τιμών μονάδας ή να εγείρει άλλες απαιτήσεις.

Άρθρο 11
Πιστοποίηση και Παραλαβή Υπηρεσιών από ΔΕΗ

11.1 Μετά την ολοκλήρωση της επισκευής και της παράδοση του αντλητικού συγκροτήματος, θα γίνουν οι αντίστοιχες δοκιμές ανά τύπο αντλίας σύμφωνα με τα οριζόμενα στην Τεχνική Περιγραφή, στις εγκαταστάσεις της ΔΕΗ, παρουσία του Αντισυμβαλλόμενου.

11.2 Μετά την επιτυχή ολοκλήρωση των δοκιμών θα συντάσσεται Πρωτόκολλο Παραλαβής του αντλητικού συγκροτήματος.

11.3 Μετά την παραλαβή και του τελευταίου αντλητικού συγκροτήματος,, αρχίζει η περίοδος εγγύησης που ορίζεται σε ένα (1) έτος.
Κατά τη διάρκεια της εγγύησης ο Αντισυμβαλλόμενος είναι υποχρεωμένος να αποκαταστήσει οποιαδήποτε βλάβη προκύψει, εκτός της περίπτωσης που έχει υπαιτιότητα η ΔΕΗ για τη βλάβη.

11.4 Μετά την λήξη της περιόδου για την πιστοποίηση και την παραλαβή από τη ΔΕΗ των παρεχόμενων υπηρεσιών, ισχύουν τα αναφερόμενα στο Άρθρο 22 των Γενικών Όρων της Σύμβασης.

Άρθρο 12
Παράδοση – Παραλαβή των προς επισκευή αντλιών

Ο Αντισυμβαλλόμενος υποχρεούται να παραλαμβάνει από το μηχανουργείο του ΑΗΣ Κερατέας-Λαυρίου τις αντλίες επί της μεταλλικής της βάσης και των αντίστοιχων κινητήρων 6KV με δικά του μέσα και κόστος. να προβαίνει στην ασφάλισή τους καθ' όλη τη διάρκεια της μεταφοράς και επισκευής τους σε αξία που θα καθορίζεται από την επιβλέπουσα υπηρεσία, να τα μεταφέρει με δαπάνες του στον τόπο επισκευής και να παραδίδει τις επισκευασμένες στο μηχανουργείο του ΑΗΣ.

Άρθρο 13
Επιθεώρηση στις εγκαταστάσεις επισκευής, δοκιμές και έλεγχοι

Η Επιβλέπουσα Διεύθυνση δύναται να παρακολουθήσει την επισκευή των ανταλλακτικών και τις λοιπές μηχανουργικές κατεργασίες που θα γίνουν στην έδρα του Αντισυμβαλλόμενου ή σε μηχανουργείο. Κατά τα λοιπά ισχύουν τα αναφερόμενα στην Τεχνική Περιγραφή.

Άρθρο 14
Εκθέσεις Επισκευής

Κατά τη διάρκεια των υπηρεσιών επισκευή και μετά την ολοκλήρωση αυτών θα παραδοθούν οι εκθέσεις και αναφορές που προβλέπονται στην Τεχνική Περιγραφή.

Άρθρο 15
Ασφαλιστικές καλύψεις

15.1 Ο Αντισυμβαλλόμενος , πέραν από τις λοιπές υποχρεώσεις, είναι υποχρεωμένος να συνομολογήσει με ασφαλιστικές Εταιρείες και να διατηρεί και να παρακολουθεί, με δικές του δαπάνες, τις παρακάτω ασφαλίσεις:

- Ασφάλιση μεταφοράς
- Ασφάλιση του προσωπικού του Αντισυμβαλλόμενου
- Ασφάλιση υλικών χορηγουμένων από τη ΔΕΗ στον Αντισυμβαλλόμενο

Το ποσό κάλυψης για την μεταφορά, απώλεια ή ζημιά στα υπό επισκευή ανταλλακτικά θα είναι αξίας τουλάχιστον 100.000 €.

15.2 Τα ασφαλιστήρια συμβόλαια για κάθε μια από τις ασφαλίσεις θα πρέπει να περιέχουν και να καλύπτουν κατ' ελάχιστο τα καθοριζόμενα στο Τεύχος «ΑΣΦΑΛΙΣΕΙΣ ΠΑΡΟΧΗΣ ΥΠΗΡΕΣΙΩΝ».

ΓΙΑ ΤΟΝ ΑΝΤΙΣΥΜΒΑΛΛΌΜΕΝΟ ΓΙΑ ΤΗΝ ΕΤΑΙΡΕΙΑ

Αριθμός Πρόσκλησης : **ΔΠΛΠ 1668**

Αντικείμενο: «Μηχανουργική υποστήριξη συντήρησης συγκροτημάτων μέσης ισχύος μονάδας V ΑΗΣ Κερατέας-Λαυρίου»

ΤΕΧΝΙΚΗ ΠΕΡΙΓΡΑΦΗ

ΤΕΥΧΟΣ 4 ΑΠΟ 7

ΤΕΧΝΙΚΗ ΠΕΡΙΓΡΑΦΗ ΠΑΡΟΧΗΣ ΥΠΗΡΕΣΙΑΣ

«ΜΗΧΑΝΟΥΡΓΙΚΗ ΥΠΟΣΤΗΡΙΞΗ ΣΥΝΤΗΡΗΣΗΣ ΑΝΤΛΗΤΙΚΩΝ ΣΥΓΚΡΟΤΗΜΑΤΩΝ ΜΕΣΗΣ ΙΣΧΥΟΣ ΜΟΝΑΔΑΣ V ΑΗΣ ΚΕΡΑΤΕΑΣ-ΛΑΥΡΙΟΥ»

1. ΓΕΝΙΚΗ ΠΕΡΙΓΡΑΦΗ ΥΠΗΡΕΣΙΩΝ

Ο Αντισυμβαλλόμενος ιδιοκτήτης Μηχανουργείου ISO9001 θα αναλάβει κατά τη διάρκεια της γενικής συντήρησης της Μονάδας V να εκτελέσει τις εξής εργασίες στις εγκαταστάσεις του σύμφωνα με το παρακάτω χρονοδιάγραμμα.

1.1. Γενική Συντήρηση τροφοδοτικής αντλίας Υ.Π. τύπου 6x14WXH10.

Ο Αντισυμβαλλόμενος θα εκτελέσει τα εξής:

α) Παραλαβή και μεταφορά από το μηχανουργείο του ΑΗΣ Κερατέας-Λαυρίου της αντλίας επί της μεταλλικής της βάσης και του αντίστοιχου κινητήρα 6KV με δικά του μέσα και κόστος.

β) Αποσυναρμολόγηση της αντλίας σύμφωνα με τις οδηγίες του τεχνικού εγχειριδίου της Flowserve, που επισυνάπτεται στο παράρτημα Α.

γ) Αποσυναρμολόγηση, επιθεώρηση, εκτέλεση ηλεκτρικών μετρήσεων του κινητήρα της αντλίας σύμφωνα με τις οδηγίες του ίδιου τεχνικού εγχειριδίου της Flowserve..

δ) Επιθεώρηση και επισκευή των επιμέρους στρατηγικών ανταλλακτικών της αντλίας.

ε) Συναρμολόγηση της αντλίας με καινούργια αναλώσιμα ανταλλακτικά που είτε θα προμηθεύσει ή θα κατασκευάσει ο Αντισυμβαλλόμενος . Αναλώσιμα ανταλλακτικά που θα προμηθεύσει η ΔΕΗ περιγράφονται στην παράγραφο 2.1.

στ) Συναρμολόγηση του κινητήρα με καινούργια αναλώσιμα ανταλλακτικά.

ζ) Μεταφορά της αντλίας και του κινητήρα στις εγκαταστάσεις του ΑΗΣ Κερατέας-Λαυρίου.

Οι εργασίες της παραγράφου 1.1. αναμένεται να εκτελεσθούν από 03-10 έως και 22-10 παρουσία τεχνικού του Οίκου Flowserve.

1.2. Γενική συντήρηση αντλίας συμπυκνώματος τύπου 243-APKD-4.

-Ο Αντισυμβαλλόμενος θα εκτελέσει τις ίδιες εργασίες όπως αυτές περιγράφονται στην παράγραφο 1.1. για δύο τέτοιες αντλίες και τους αντίστοιχους κινητήρες, σύμφωνα με τις οδηγίες αντίστοιχου τεχνικού εγχειριδίου της Flowserve που επισυνάπτεται στο παράρτημα Β.

Οι εργασίες για την πρώτη αντλία θα εκτελεσθούν από 28-09 έως και 08-10 ενώ για τη δεύτερη αντλία θα εκτελεσθούν από 12-11 έως και 23-11.

1.3. Γενική συντήρηση αντλίας κυκλοφορίας θαλάσσης τύπου 45APMA.

Ο Αντισυμβαλλόμενος θα εκτελέσει τις ίδιες εργασίες όπως αυτές περιγράφονται στην παράγραφο 1.1. για δύο τέτοιες αντλίες και τους αντίστοιχους κινητήρες,

σύμφωνα με τις οδηγίες αντίστοιχου τεχνικού εγχειριδίου της Flowserve που επισυνάπτεται στο παράρτημα Γ.
Οι εργασίες για την πρώτη αντλία θα εκτελεσθούν από 08-10 έως και 21-10 ενώ για τη δεύτερη από 03-11 έως και 16-11.

1.4. Γενική συντήρηση τροφοδοτικής αντλίας Μ.Π. τύπου 3x11WXH5.

Ο Αντισυμβαλλόμενος θα εκτελέσει τις ίδιες εργασίες όπως αυτές περιγράφονται στην 1.1. για δύο τέτοιες αντλίες και τους αντίστοιχους κινητήρες, σύμφωνα με τις οδηγίες αντίστοιχου τεχνικού εγχειριδίου της Flowserve που επισυνάπτεται στο παράρτημα Δ..
Οι εργασίες για την πρώτη αντλία θα εκτελεσθεί από 24-10 έως και 03-11 ενώ για τη δεύτερη αντλία από 09-11 έως και 19-11.
Το ενδεικτικό πρόγραμμα απασχόλησης του μηχανουργείου επισυνάπτεται στο χρονοδιάγραμμα συντήρησης των αντλητικών συγκροτημάτων που επισυνάπτεται στο παράρτημα Ε.
Σύμφωνα με το χρονοδιάγραμμα αυτό το μηχανουργείο αναμένεται να διαθέσει τις υπηρεσίες του από 28-09 έως και 28-11 κατ' ελάχιστο για εξήντα (60) ημερολογιακές ημέρες εξυπηρετώντας ταυτόχρονα τη συντήρηση έως και δύο (2) αντλητικών συγκροτημάτων. Οι συντηρήσεις των πρώτων τεσσάρων (4) αντλιών θα γίνουν υπό την επίβλεψη τεχνικού του κατασκευαστή των αντλιών Flowserve.
Συγκεκριμένα ο τεχνικός της Flowserve θα επιθεωρήσει και θα δώσει τις απαραίτητες οδηγίες για:

- Τις διαδικασίες αποσυναρμολόγησης των τροφοδοτικών αντλιών τύπου WXH Υψηλής Πίεσης (HP FWP1) και της πρώτης αντλίας μέσης πίεσης (IP FWP1).
- Τις διαδικασίες επιθεώρησης, καθαρισμού, συντήρησης και επισκευών των κύριων εσωτερικών εξαρτημάτων των δύο (2) αυτών αντλιών.
- Τις διαδικασίες συναρμολόγησης των δύο (2) τροφοδοτικών αντλιών Υ.Π. και Μ.Π. (HP FWP1 & IPFWP1).
- Τα αποτελέσματα των επιθεωρήσεων όλων των εξαρτημάτων των δύο (2) πρώτων αντλιών που θα συντηρηθούν τύπου 45 APMA (αντλία CSWP1) και 243-APKD-4 (αντλία CEWP1) και τις οδηγίες επισκευής αυτών.

Οι εργασίες συντήρησης των υπόλοιπων τριών (3) αντλιών στο μηχανουργείο του Αντισυμβαλλόμενου αντλία κυκλοφορίας θαλάσσης (CSWP2 τύπου 45 APMA), αντλία συμπυκνώματος (CEWP2 τύπου 243-APKD-4) και τροφοδοτικής αντλίας Μ.Π. (IP FWP2 τύπου 3x11WXH-5) θα εκτελεσθούν κατά τη δεύτερη (Β) φάση εργασιών από 03-11 έως και 25-11.
Όλες οι εργασίες συντήρησης των αντλιών της Β' φάσης θα εκτελεσθούν στις εγκαταστάσεις του Αντισυμβαλλόμενου παρουσία υπαλλήλου της ΔΕΗ.

2. ΑΝΑΛΥΤΙΚΗ ΠΕΡΙΓΡΑΦΗ ΕΡΓΑΣΙΩΝ

2.1. Συντήρηση τροφοδοτικής αντλίας Υ.Π. 6x14WXH10

Η συντήρηση της αντλίας θα εκτελεσθεί σύμφωνα με τις απαιτήσεις του τεχνικού εγχειριδίου της Flowserve 10.06.50.10894 rev.0 (Παράρτημα Α) και τις οδηγίες του τεχνικού του Οίκου. Στο τεχνικό εγχειρίδιο του κατασκευαστή βρίσκεται το γενικό σχέδιο της αντλίας 6x14WXH500XE119 του κόμπλερ της αντλίας OF - 14885 της μηχανικής στεγανοποίησης 949407 και του κινητήρα τύπου AECW-S2002. Η αναγνώριση όλων των εξαρτημάτων της αντλίας θα γίνεται βάσει της κωδικοποίησης του σχεδίου 6x14WXI+500XE119 εκτός εάν γίνεται αναφορά σε άλλο σχέδιο.

2.1.1 Μεταφορά της αντλίας

Η αντλία θα παραδοθεί επί της μεταλλικής της βάσης πλήρως συναρμολογημένη με τις μηχανικές στεγανοποιήσεις (4200) ασφαλισμένες ως προς το κέλυφος της αντλίας ώστε να μην είναι δυνατή η μετατόπιση των κινητών μερών της μηχανικής στεγανοποίησης ως προς το κέλυφός της. Η αντλία είναι από κατασκευής

ασφαλισμένη επί της βάσης της μέσω πείρου στο κέλυφος αναρρόφησης της αντλίας (1130.1) και οδηγητικής σφήνας στο κέλυφος κατάθλιψης της αντλίας (1140).
Ο Αντισυμβαλλόμενος θα ασφαλίσει το στροφείο ως προς τη μεταλλική βάση της αντλίας μέσω κατάλληλης μεταλλικής διάταξης που θα κοχλιωθεί στον ημισύνδεσμο του κόμπλερ και θα συγκολληθεί επί της μεταλλικής βάσης. Ο κινητήρας της αντλίας θα μεταφερθεί αφού ο Αντισυμβαλλόμενος αποσυναρμολογήσει από το κέλυφος του στάτη το ψυγείο αέρος-νερού, που βρίσκεται στο πάνω μέρος του κινητήρα. Η αποσυναρμολόγηση των ακροκιβωτίων του κινητήρα θα γίνει μερίμνει ΔΕΗ. Ο Αντισυμβαλλόμενος θα μεταφέρει στις εγκαταστάσεις του και το ψυγείο του κινητήρα. Αντίστοιχα ο Αντισυμβαλλόμενος θα ασφαλίσει έναντι αξονικής και περιστροφής του ρότορα ως προς τον στάτη του κινητήρα της αντλίας με κατάλληλη μεταλλική διάταξη.
Το βάρος της αντλίας και της βάσης της ανέρχεται σε 5.000kg ενώ του κινητήρα 7.600kg. Η αντλία θα παραδοθεί αφού αφαιρεθούν μερίμνει ΔΕΗ όλα τα όργανα επιτήρησης.

2.1.2 <u>Αποσυναρμολόγηση της αντλίας.</u>

Ο Αντισυμβαλλόμενος θα αποσυναρμολογήσει την αντλία σύμφωνα με τις οδηγίες της παραγράφου 6.5 και 6.6 του τεχνικού εγχειριδίου της Flowserve 10.06.50.10894 που επισυνάπτεται στο παράρτημα Α' της τεχνικής προδιαγραφής. Η διαδικασία της αποσυναρμολόγησης θα γίνει παρουσία τεχνικού του Οίκου Flowserve. Ο Αντισυμβαλλόμενος για την αποσυναρμολόγηση εξαρτημάτων (με συναρμογή σύσφιξης με τον άξονα (2100) θα χρησιμοποιήσει επαγωγική συσκευή ομοιόμορφης θέρμανσης σε θερμοκρασίες που καθορίζονται στην παράγραφο 6.6.
Η αποσυναρμολόγηση του ημισυνδέσμου του κόμπλερ, των δύο (2) εδράνων της αντλίας των δύο (2) μηχανικών στεγανοποιήσεων και του δίσκου εξισορρόπησης γίνονται σε οριζόντια θέση της αντλίας πακτωμένη επί της μεταλλικής της βάσης. Οδηγίες αποσυναρμολόγησης των παραπάνω εξαρτημάτων δίνονται στις παραγράφους 6.5, 6.6.2, 6.6.3, 6.6.4, 6.6.5 και 6.6.6 του εγχειριδίου της Flowserve. Ο Αντισυμβαλλόμενος πριν προχωρήσει στην περαιτέρω αποσυναρμολόγηση της αντλίας θα πρέπει να ελέγξει την πιθανή φθορά της αντλίας. Θα καταγράψει το πάχος των προσθηκών 3126.9 που καθορίζουν το διάκενο του ωστικού τριβέα, το πάχος των προσθηκών 3126.3 έως και 8 που καθορίζουν το διάκενο του κινητού δίσκου εξισορρόπησης με τον αντίστοιχο σταθερό δίσκο (6210 - 6220) και των προσθηκών 3126.2 που καθορίζουν την αξονική θέση του στροφείου ως προς το κέλυφος, η οποία πρέπει να καταγραφεί πριν την αφαίρεση των κάτω ωστικών πλινθίων (3033). Μετά την αφαίρεση του ωστικού κολλάρου (3610) ο Αντισυμβαλλόμενος θα κατασκευάσει προσωρινό ωστικό κολλάρο με χαλαρή συναρμογή με τον άξονα. Με διαδικασία που περιγράφεται στην παράγραφο 6.9.6 (α έως και m) ο Αντισυμβαλλόμενος θα καταγράψει την φθορά των δίσκων εξισορρόπησης της αντλίας. Εν συνεχεία ο Αντισυμβαλλόμενος θα καταγράψει τα μήκη των κοχλιών συναρμολόγησης της αντλίας (tie rods 6571.1,2,3) ώστε να ελεγχθεί η προ έντασή τους. Ο Αντισυμβαλλόμενος αφού θα αποσυναρμολογήσει την αντλία από τη βάση της (6.6.7.1.(α)) θα προχωρήσει στο λύσιμο των περικοχλίων (6580) από τα tie rods χωρίς να τα αφαιρέσει με κατάλληλη υδραυλική διάταξη ταυτόχρονης προέντασης σε δύο τουλάχιστο κοχλίες. Εν συνεχεία θα εγκαταστήσει την αντλία σε κατακόρυφη βάση που θα κατασκευάσει ώστε να προχωρήσει η αποσυναρμολόγηση της κύριας αντλίας σύμφωνα με τις διαδικασίες που περιγράφονται στις παραγράφους (6.6.7.1 (c)) έως και (h). Ο Αντισυμβαλλόμενος καθ' όλη τη διάρκεια της αποσυναρμολόγησης θα προχωρήσει στην αναγνώριση όλων των εξαρτημάτων θα καταγράψει σε κάθε ένα από αυτά το part number του σχεδίου 6x14WXH500XE119. Επίσης θα παραδώσει στη ΔΕΗ λίστα με όλα τα αναλώσιμα υλικά O - ring, ασφάλειες, προσθήκες, παρεμβύσματα με διαστάσεις και ποιότητα υλικού. Η ΔΕΗ θα παραδώσει στον Αντισυμβαλλόμενο μόνο τα O – rings της αντλίας και όποιο στρατηγικό ανταλλακτικό της κύριας αντλίας που δεν είναι

επισκευάσιμο. Ως στρατηγικά ανταλλακτικά ορίζονται όλα τα υδραυλικά εξαρτήματα άντλησης νερού και περιγράφονται στον πίνακα 1 του παραρτήματος Α.

2.1.3 Εργασίες επιθεώρησης κύριων εξαρτημάτων αντλίας.

2.1.3.1. Γενικές Εργασίες

Α. Καθαρισμός εξαρτημάτων.

Ο Αντισυμβαλλόμενος θα προχωρήσει στον καθαρισμό όλων των εξαρτημάτων πριν την επιθεώρησή τους. Τα υδραυλικά μέρη άντλησης νερού όπως πτερωτές, οδηγητικά πτερύγια, κελύφη (2200.1,2/1410.1,2,3/1150.1,2/1130.1,2/1140) θα αμμοβοληθούν με υαλοσφαιρίδια ώστε η τραχύτητα των υδραυλικών μερών να μην επηρεασθεί. Μετρήσεις τραχύτητας θα μετρηθούν πριν και μετά τον καθαρισμό των επιφανειών. Μίγμα υαλοσφαιριδίων με αμμοβολή μπορεί να χρησιμοποιηθεί μόνο στα κελύφη 1130.1,2 και 1140. Τα εξαρτήματα των εδράσεων της αντλίας όπως και οι δίσκοι εξισορρόπησης θα καθαρισθούν σε μπάνιο υπερήχων.

Β. Μηχανουργικές μετρήσεις και μελέτη σχεδιασμού εξαρτημάτων αντλίας.

Μετά τον καθαρισμό των εξαρτημάτων ο Αντισυμβαλλόμενος θα εκπονήσει με τη μέθοδο reverse engineering κατασκευαστικά σχέδια βασικών εξαρτημάτων της αντλίας.

Τα βασικά εξαρτήματα είναι ο άξονας (2100), χιτώνιο προστασίας άξονα (2410, inter stage sleeve), σφήνες άξονα (6700.1,2,3,4) τα κελύφη (1150.1,2,1910), δίσκος εξισορρόπησης (6210 - 6220), δακτύλιοι άξονα (2482, 2530), ωστικό κολλάρο (3610), περικόχλια (3712, 7411) και τα οδηγητικά πτερύγια – diffuser (1410.1,2,3).

Βάσει των σχεδίων αυτών ο Αντισυμβαλλόμενος θα καθορίσει όλες τις ονομαστικές συναρμογές των παρακάτω ζευγών εξαρτημάτων όπως: (1150.1 – 1150.2) / (1150.2-1140) / (1150.1-1910) /(1910-1130.1) / (1910-1140.1)/ (1910-1160)/ (1130.1-1130.2) / (1140 – 1410.3) / (1410.3 – 1150.2) / (1150.2 – 1410.2) / (1150.1 – 1410.2) / (6220 – 1140) / (1140 – 4110).

Επίσης ο Αντισυμβαλλόμενος θα ελέγξει όλα τα ακτινικά διάκενα της αντλίας με μετρήσεις ονομαστικών διαμέτρων των επιμέρους συνεργαζόμενων εξαρτημάτων όπως αυτά καθορίζονται στην παράγραφο 6.8.1.

Εκτός από τον καθορισμό των υλικών των παραπάνω βασικών εξαρτημάτων ο Αντισυμβαλλόμενος θα εκτελέσει σκληρομετρήσεις σε όλες τις επιφάνειες συναρμογής όπως αυτές καθορίσθηκαν παραπάνω καθώς επίσης στους φθειρόμενους δακτυλίους των πτερωτών και των οδηγητικών πτερυγίων. Σκληρομετρήσεις, θα εκτελεσθούν στους δίσκους εξισορρόπησης και θα καθορισθεί η διαδικασία επιφανειακης βαφής στις συνεργαζόμενες επιφάνειες του κινητού με τον σταθερό δίσκο.

Γ. Εκτέλεση ΜΚΕ

Μετά τις παραπάνω εργασίες καθαρισμού και reverse engineering ο Αντισυμβαλλόμενος θα εκτελέσει ΜΚΕ βάσει προγράμματος του τεχνικού της Flowserve που θα περιλαμβάνει κατ' ελάχιστο τους εξής ελέγχους:

i) FPI στα κομβία του άξονα, στους σφηνόδρομους και στις αλλαγές διαμέτρου του άξονα.
ii) U.T. και FPI στα tie rods
iii) D.P. στα έδρανα
iv) FPI στο ωστικό κολλάρο (3610), στις πτερωτές της αντλίας, στα οδηγητικά πτερύγια και στους δίσκους εξισορρόπησης.
v) D.P στα σημεία αλλαγής γεωμετρίας στα σπειροειδή κελύφη κατάθλιψης – αναρρόφησης.

2.1.3.2. Επιθεώρηση – Επισκευή Εξαρτημάτων Αντλίας.

Μετά την εκτέλεση όλων των εργασιών επιθεώρησης των εξαρτημάτων που περιγράφονται στην παραπάνω παράγραφο (2.1.3.1) καθώς και στην παράγραφο 6.7 του τεχνικού εγχειριδίου της manual ο Αντισυμβαλλόμενος θα προχωρήσει στις παρακάτω εργασίες επισκευής εφόσον βρεθούν αποκλίσεις από τα επιτρεπτά όρια.

α) Επισκευή όλων των επιφανειών στεγανοποίησης και συναρμογής σταθερών εξαρτημάτων.

α.1). Σταθερά κελύφη αντλίας 1150.1-1150.2. Επίπεδο αναφοράς το εσωτερικό τρύμα του κάθε κελύφους. Λείανση της υποδοχής στεγανοποιητικού δακτυλίου o-ring. Λείανση της ακτινικής επιφάνειας στεγανοποίησης των δύο κελυφών έλεγχος στεγανότητας με χρώμα. Τραχύτητα επιφανειών όχι μεγαλύτερη των 4 Ra. Εφόσον οι επιφάνειες αυτές έχουν φθορές λόγω τριβών ή ροής από διαρροή νερού ο Αντισυμβαλλόμενος θα αποκαταστήσει την επιπεδότητα και θα αναγομώσει τις επιφάνειες αυτές στις ονομαστικές διαστάσεις που θα έχει παραδώσει ο Αντισυμβαλλόμενος . Η αναγόμωση θα γίνει με μέθοδο laser ή EBW με κατάλληλο ανοξείδωτο σύρμα για φεριτικό χάλυβα ώστε να μειωθεί η θερμική καταπόνηση του υλικού. Επιτρεπτό πάχος ολικής αναγόμωσης έως 0,5mm. Για μεγαλύτερα αναγκαία πάχη αναγόμωσης θα γίνεται μερική αναγόμωση ώστε να αποκαθίσταται η σχετική θέση των επιμέρους εξαρτημάτων, ως προς τα συνεργαζόμενα κινητά. Λείανση της ακτινικής συναρμογής των κελυφών. Εάν η συναρμογή αυτή είναι εκτός ορίων λόγω τριβών ο Αντισυμβαλλόμενος θα αναγομώσει τη αρσενική πατούρα έως με αναγόμωση και κατεργασία έως πάχος 0,25mm (δεν αναμένονται μεγαλύτερες φθορές).. Υλικό αναγόμωσης ανοξείδωτο σύρμα κατάλληλο για φεριτικό ανοξείδωτο χάλυβα.
Καθαρισμός σπειρωμάτων ανάρτησης κελυφών. Έλεγχος παραλληλότητας και καθετότητας επιπέδων ως προς επίπεδο αναφοράς μετά από όλες τις κατεργασίες ελάχιστη απόκλιση 0,05mm.
α.2) Σταθερό κέλυφος αντλίας με σπειροειδές κέλυφος κατάθλιψης (1150.2-1140).Επίπεδο αναφοράς του 1150.2 όπως παραπάνω. Λείανση της υποδοχής στεγανοποιητικού δακτυλίου o-ring. Λείανση της ακτινικής επιφάνειας στεγανοποίησης των δύο κελυφών έλεγχος στεγανότητας με χρώμα. Τραχύτητα επιφανειών όχι μεγαλύτερη των 4 Ra. Εάν απαιτηθεί αναγόμωση της επιφάνειας στεγανοποίησης θα αναγομωθεί μόνο το κέλυφος 1150.2. Λείανση ακτινικής συναρμογής των δύο εξαρτημάτων. Αποκατάσταση ακτινικής συναρμογής στις ονομαστικές διαστάσεις εάν απαιτηθεί θα γίνει με αναγόμωση μόνο του εξαρτήματος 1150.2.
α.3) Σταθερό κέλυφος αντλίας με κέλυφος αναρρόφησης.(1150.1-1910).Επίπεδο αναφοράς του 1150.1 ως άνω. Λείανση επιφανειών υποδοχής o-ring. Λείανση κατακόρυφης επιφάνειας στεγανοποίησης των δύο τεμαχίων. Λείανση των επιφανειών ακτινικής συναρμογής των δύο τεμαχίων. Εάν απαιτηθεί αναγόμωση ακτινικής συναρμογής αυτή θα γίνει μόνο με αναγόμωση στο κέλυφος 1150.1. Καθαρισμός σπειρωμάτων τεμαχίων.
α.4) Κέλυφος αναρρόφησης αντλίας.(1910). Επιφάνεια αναφοράς του εξαρτήματος αυτού η εσωτερική διάμετρος συναρμογής με το εξάρτημα 1160. Το εξάρτημα 1910 συνεργάζεται με 4 συνολικά άλλα εξαρτήματα (το στόμιο αναρρόφησης 1130.1), τα οδηγητικά πτερύγια (1160 και 1410.1) και το κέλυφος 1150.1 (παράγραφος α.3). Λείανση όλων των επιφανειών συναρμογής του κελύφους αυτού με τραχύτητα έως 4μm. Λείανση της εσοχής τοποθέτησης των o-ring, Οι επιφάνειες συναρμογής του κελύφους 1910 με το οδηγητικό πτερύγιο 1160 είναι αρκετά πιθανό να έχουν φθορές λόγω ροής νερού και πίεσης επαφής. Ο Αντισυμβαλλόμενος θα κατεργασθεί τις φθορές επί του 1910 θα τις αναγομώσει με ανοξείδωτο φεριτικό σύρμα με laser και εν συνεχεία θα τις κατεργασθεί ώστε να μην επηρεασθεί η σχετική αξονική θέση των δύο αυτών εξαρτημάτων. Αναγόμωση και κατεργασία των δύο δακτυλίων φθοράς του κελύφους (1500.2 με το προστατευτικό χιτώνιο του άξονα 2410) .και με την πρώτη πτερωτή 2200 εφόσον τα ακτινικά διάκενα είναι εκτός ορίων.. Η αναγόμωση θα γίνει με μέθοδο Laser ώστε να μειωθεί η ζώνη θερμικού επηρεασμού του κομματιού. Μετά την ολοκλήρωση των κατεργασιών θα ελεγχθεί η παραλληλότητα και καθετότητα των επιφανειών του εξαρτήματος ως προς την επιφάνεια αναφοράς.
α.5) Σπειροειδές κέλυφος αντλίας εξαρτήματα 1130.1-1130.2. Επιφάνεια αναφοράς εξαρτήματος 1130.2 η εσωτερική διάμετρος του τρήματος του τεμαχίου διέλευσης του άξονα. Επιφάνεια αναφοράς του 1130.1 η εσωτερική διάμετρος συναρμογής με το

1130.2. Ο Αντισυμβαλλόμενος θα λειάνει την φλάντζα αναρρόφησης του σπειροειδούς κελύφους 1130.1 η οποία πρέπει να είναι παράλληλη με την επιφάνεια αναφοράς του εξαρτήματος με ανοχή 0,05mm. Απαιτούμενη τραχύτητα Ra 4μm. Λείανση των επιφανειών στεγανότητας των δύο εξαρτημάτων και των εσοχών εγκατάστασης o-rings. Ανοχή των δύο εσωτερικών κυλινδρικών επιφανειών του 1130.2 0,01mm.
Αναγόμωση του δακτυλίου φθοράς 1500.1του εξαρτήματος 1130.2 σε περίπτωση που το ακτινικό διάκενο έχει υπερβεί τα ονομαστικά όρια.
α.6) Οδηγητικό πτερύγιο 1410.1. Επιφάνεια αναφοράς του εξαρτήματος η εσωτερική οπή του δακτυλίου συνεργασίας με την αντίστοιχη πτερωτή. Καθαρισμός και λείανση των επιφανειών στεγανότητας και συναρμογής με τα εξαρτήματα 1130.2 και 1910. Τραχύτητα επιφανειών 4μm. Αναγομώσεις επιφανειών συναρμογών σύμφωνα μτα παραπάνω.
α.7) Οδηγητικά πτερύγια 1410.2 με κελύφη 1150.1 και 1150.2. Επιφάνεια αναφοράς των οδηγητικών πτερυγίων οι εσωτερικές κυλινδρικές επιφάνειες συνεργασίας με τις πτερωτές. Στα σημεία επαφής των οδηγητικών πτερυγίων με τις επιφάνειες των κελυφών 1150.1,2 λόγω πίεσης επιφάνειας υπάρχει πιθανότητα να υπάρχουν φθορές. Ο Αντισυμβαλλόμενος θα αναγομώσει τα σημεία φθοράς και θα κατεργασθεί εκ νέου τα τεμάχια στις ονομαστικές διαστάσεις ώστε η σχετική αξονική θέση των οδηγητικών πτερυγίων ως προς τα κελύφη και τις πτερωτές να μην αλλάξει. Αναγόμωση των σταθερών δακτυλίων φθοράς 1500.3 και 1500.4 με διαδικασία ως παραπάνω. Έλεγχος της γεωμετρίας όλων των εξαρτημάτων ως προς τις επιφάνειες αναφοράς. Απόκλιση παραλληλότητας των επιφανειών δακτυλίων φθοράς ως προς επίπεδα αναφοράς 0,025mm.
α.8) Οδηγητικό πτερύγιο 1410.3. Επιφάνεια αναφορά η εσωτερική κυλινδρική επιφάνεια συνεργασίας με την πτερωτή 2200.3 το εξάρτημα αυτό συνεργάζεται με το κέλυφος 1150.2 και με το σπειροειδές κέλυφος κατάθλιψης 1140. Λείανση επιφανειών συναρμογής και στεγανοποίησης με τα δύο αυτά εξαρτήματα. Αναγόμωση της επιφάνειας συναρμογής με το σπειροειδές κέλυφος ώστε να επιτευχθεί η απαιτούμενη σύσφιξη.
α.9) Σπειροειδές κέλυφος κατάθλιψης αντλίας 1140. Επιφάνεια αναφοράς το εσωτερικό τρίμα διέλευσης της πτερωτής 2200.3. Λείανση της επιφάνειας στεγανοποίησης της φλάντζας κατάθλιψης ,ποιότητα επιφάνειας Ra 4μm. Λείανση επιφάνειας φλάντζας σύνδεσης εκκενωτικού αντλίας. Έλεγχος με χρώμα. Απόκλιση παραλληλότητας επιφάνειας φλάντζας κατάθλιψης και τρίματος εγκατάστασης κελύφους μηχανικής στεγανοποίησης και σταθερού δίσκου εξισορρόπησης (6220)0,01mm.

β) Επισκευή πτερωτών.
Επιφάνεια αναφοράς όλων των πτερωτών είναι το εσωτερικό τρίμα των πτερωτών διέλευσης του άξονα της αντλίας. Όλες οι υπόλοιπες επιφάνειες (δακτυλίων φθοράς και εξωτερικής διαμέτρου αντλίας παράλληλες προς την επιφάνεια αναφοράς κατά 0,01mm.
Αναμενόμενα σημεία φθοράς των πτερωτών είναι οι επιφάνειες επαφής μιας πτερωτής με τις αντίστοιχες πτερωτές της προηγούμενης ή επόμενης βαθμίδας ή με το χιτώνιο προστασίας του άξονα (2410). Οι φθορές αυτές θα κατεργασθούν και εν συνεχεία θα αναγομωθούν εφόσον είναι μεγαλύτερες των 0,05mm. Η αναγόμωση θα είναι με δέσμη laser ή EBW ώστε η θερμική ζώνη επηρεασμού να είναι μικρή. Οι επιφάνειες αυτές κατ' ελάχιστο όλες θα λειανθούν με Ra ≈ 0.4μm.
Τα ακτινικά διάκενα της αντλίας στους δακτυλίους φθοράς θα αποκατασταθούν με αναγόμωση των σταθερών δακτυλίων. Σε περίπτωση όπου η φθορά των κινητών δακτυλίων φθοράς είναι μεγαλύτερη από 1mm τότε οι δακτύλιοι τότε οι δακτύλιοι θα αντικατασταθούν με καινούργιους που θα κατασκευάσει ο Αντισυμβαλλόμενος από υλικό AISI 420 όπως προδιαγράφεται στο σχέδιο της αντλίας με επίτευξη

επιφανειακής σκλήρυνσης με χρήση τόξου από laser. Η μέθοδος σκλήρυνσης των κινητών δακτυλίων φθοράς θα ελεγχθεί πρώτα σε δείγμα όπου θα ελεγχθεί με ρεπλίκα η κρυσταλλογραφική δομή του ωστενίτη και επίτευξη σκληρότητας 300-350HB. Οι κινητοί δακτύλιοι φθοράς θα εγκατασταθούν επί των πτερωτών με σύσφιξη 0,05mm. Όλες οι πτερωτές εφόσον αντικατασταθούν δακτύλιοι ή αναγομωθούν στις επιφάνειες φθοράς θα ελεγχθούν ως προς την επιφάνεια αναφοράς τους και εν συνεχεία θα ζυγοσταθμιστούν σε κατάλληλη επίπεδη μηχανή ζυγοστάθμισης. Απαιτούμενη ποιότητα ζυγοστάθμισης
Εάν κάποια πτερωτή έχει μη επισκευάσιμη φθορά αυτή θα αντικατασταθεί με καινούργια που θα παραδώσει η ΔΕΗ.

γ) Συντήρηση εδράνων αντλίας.
γ.1) Ωστικό κολλάρο. Λείανση της επιφάνειας του ωστικού κολλάρου επιθυμητή τραχύτητα Ra ≈ 0.4μm. Σε περίπτωση όπου απαιτηθεί να κατεργασθεί η επιφάνεια του ωστικού κολλάρου για πάχος τέτοιο που θα έχει σαν αποτέλεσμα το πάχος των προσθηκών 3126.5 έως και 9 να είναι μεγαλύτερο των 2,5mm το κολλάρο θα κατασκευασθεί με καινούργιο από υλικό CK45 κατά DIN και θα υποστεί επιφανειακή βαφή και από τις δύο πλευρές με εναζώτωση. Εάν απαιτηθεί αντικατάσταση ωστικών πλινθίων θα τα παραδώσει η ΔΕΗ.
γ.2) Αναγόμωση με λευκό μέταλλο των ακτινικών κουζινέτων (3300) σε περίπτωση αστοχιών της αντιτριβικής επίστρωσης ή το διάκενο των κουζινέτων είναι μεγαλύτερο του 0,1mm.
γ.3) Ανακατασκευή των λαβυρίνθων λαδιού εφόσον τα διάκενα είναι μεγαλύτερα των 0,05mm. Επίστρωση με νέο αντιτριβικό υλικό από λευκό μέταλλο.

δ) Δίσκοι εξισορρόπησης. Οι δίσκοι θα αντικατασταθούν σύμφωνα με τις απαιτήσεις της παραγράφου 6.7.5 του τεχνικού εγχειριδίου της Flowserve, ή εφόσον κατά τον έλεγχο φθοράς κατά τη διαδικασία αποσυναρμολόγησης διαπιστωθεί ότι το αξονικό διάκενο των δίσκων είναι μεγαλύτερο του 0,12mm. Οι δίσκοι εάν απαιτηθεί να αντικατασταθούν με καινούργιους αυτούς θα τους παραδώσει η ΔΕΗ.
Η συντήρηση των εγκατεστημένων περιλαμβάνει τη λείανση των επιφανειών στεγανοποίησης των δύο δίσκων απαιτούμενη τραχύτητα 0,4μm.Έλεγχος στεγανότητας επιφανειών με χρώμα. Αναγομώσεις για την επίτευξη συναρμογών και αποκατάσταση φθορών επιτρέπεται μόνο στο σταθερό δίσκο εξισορρόπησης.

ε) Άξονας αντλίας Ο άξονας της αντλίας θα ελεγχθεί ως προς την μόνιμη παραμόρφωσή του στηριγμένος σε ράουλα επί των κομβίων του. Η ένδειξη TIR στα κομβία καθώς θα περιστρέφεται θα είναι μικρότερη του 0,01mm και στο κέντρο του στροφείου μικρότερη από 0,05mm. Λείανση κομβίων και χιτωνίου προστασίας έξονα. Ποιότητα επιφάνειας στα κομβία άξονα Ra 0,4μm.

Στ) Κοχλίες λυόμενων συνδέσεων. Ο Αντισυμβαλλόμενος θα καθαρίσει όλα τα σπειρώματα των κοχλιών και των κοχλιοτομημένων οπών επί των κελυφών και θα κατασκευάσει τυχόν κοχλίες που δεν είναι επισκευάσιμοι.

2.1.4 Συναρμολόγηση της αντλίας.

Ο Αντισυμβαλλόμενος θα συναρμολογήσει εκ νέου την αντλία και θα την παραδώσει έτοιμη προς εγκατάσταση στις εγκαταστάσεις του ΑΗΣ. Η συναρμολόγηση της αντλίας θα γίνει σύμφωνα με τις απαιτήσεις των παραγράφων 6.8 και 6.9 του τεχνικού εγχειριδίου του manual της Flowserve εφόσον ολοκληρωθούν όλες οι εργασίες επισκευής που αναφέρονται παραπάνω.
Η ΔΕΗ θα προμηθεύσει τον Αντισυμβαλλόμενο με δύο (2) πλήρεις μηχανικές στεγανοποιήσεις 4200, ένα (1) σετ O – ring και παρεμβασμάτων και όποιο

στρατηγικό ανταλλακτικό της αντλίας π-ου θεωρηθεί ως μη επισκευάσιμο όπως αυτά αναφέρθηκαν παραπάνω..
Ο Αντισυμβαλλόμενος θα κατασκευάσει όλα τα μικρούλικα λυόμενων συνδέσεων της αντλίας που δεν μπορούν να επαναχρησιμοποιηθούν όπως κοχλίες, σφήνες, ασφάλειες, πείροι, περικόχλια. Οι συσφίξεις θα γίνουν όλες με δυναμόκλειδο ώστε να επιτευχθούν οι απαιτούμενες ροπές σύσφιξης. Επιπρόσθετα η προ ένταση των κοχλιών συναρμολόγησης της αντλίας – tie rods θα γίνει με υδραυλική διάταξη που θα συνοδεύεται από πιστοποιημένο πίνακα προ έντασης κοχλιών και θα έχει τη δυνατότητα της ταυτόχρονης ομοιόμορφης επιμήκυνσης τουλάχιστον δύο (2) κοχλιών – tie rods.
Η επιμήκυνση των κοχλιών αυτών θα μετρηθεί και θα ελεγχθεί από τον τεχνικό της Flowserve. Όλες οι συναρμογές σύσφιξης θα γίνουν με επαγωγική διάταξη συναρμολόγησης σε θερμοκρασίες που περιγράφονται στην παράγραφο 6.9, 6.10 και 6.11.
Ο Αντισυμβαλλόμενος θα ρυθμίσει και θα καταγράψει το ολικό αξονικό και ακτινικό διάκενο της αντλίας και το πάχος των προσθηκών ρύθμισης αξονικής θέσης της αντλίας 3126.1. Η εγκατάσταση των μηχανικών στεγανοποιήσεων θα εκτελεσθεί μετά την κέντρωση του στροφείου σύμφωνα με τις απαιτήσεις της παραγράφου 6.9.5 και των οδηγιών του εγχειριδίου εγκατάστασης μηχανικών στεγανοποιήσεων της Flowserve που είναι επίσης παράρτημα του εγχειριδίου της αντλίας του OEM.
Ο Αντισυμβαλλόμενος θα καταγράψει το διάκενο των δίσκων εξισορρόπησης και το πάχος των προσθηκών 3126.3,4 που ρυθμίζουν το διάκενο αυτό. Επίσης θα καταγράψει το τελικό πάχος του διακένου του ωστικού εδράνου και το πάχος των προσθηκών 3126.5 έως και 9 που το ρυθμίζουν. Όλες οι προσθήκες θα είναι από ανοξείδωτο χάλυβα 316L.

2.1.5. <u>Υδροστατική δοκιμή αντλίας.</u>

Μετά την ολοκλήρωση όλων των εργασιών συναρμολόγησης ο Αντισυμβαλλόμενος θα κατασκευάσει τυφλές σε όλες της λήψεις νερού της αντλίας στην αναρρόφηση, κατάθλιψη, γραμμής νερού balance και στεγανοποιήσεων αντλίας, λήψεις πιέσεων κατάλληλης αντοχής έως 16 bar. Η πλήρωση της αντλίας θα γίνει από την αναρρόφηση της αντλίας και η εξαέρωσή της από τη φλάντζα κατάθλιψης και των γραμμών νερού balance και μηχανικών στεγανοποιήσεων. Το νερό υδροστατικής δοκιμής θα είναι απιονισμένο νερό που θα παραδώσει ο ΑΗΣ σε δεξαμενές του $1m^3$.
Το δίκτυο πλήρωσης θα είναι από ανοξείδωτες σωληνώσεις που θα κατασκευάσει ο Αντισυμβαλλόμενος . Η αντλία θα δοκιμασθεί σε πίεση 16 barg επί ½ ώρα χωρίς να διαπιστωθεί διαρροή στο κέλυφος του και στις μηχανικές στεγανοποιήσεις της αντλίας. Στην κατάθλιψη και στην αναρρόφηση της αντλίας υδροστατικής δοκιμής θα εγκατασταθούν φίλτρα νερού που θα προμηθεύσει η ΔΕΗ.
Μετά την ολοκλήρωση των παραπάνω εργασιών και δοκιμών παραλαβής η αντλία θα πακτωθεί επί της βάσης της και θα παραδοθεί στις εγκαταστάσεις της ΔΕΗ. Επίσης ο Αντισυμβαλλόμενος θα καταθέσει τεχνική έκθεση που θα περιλαμβάνει:

- Τα κατασκευαστικά τελικά σχέδια των εξαρτημάτων της αντλίας
- Τις τελικές συναρμογές όλων των συνεργαζόμενων εξαρτημάτων όπως περιγράφονται στην παράγραφο 2.1.3.1.
- Πίνακα υλικών και σκληρομετρήσεων όλων των κύριων εξαρτημάτων της αντλίας.
- Πίνακας αναλωσίμων υλικών στεγανοποίησης και λυόμενων συνδέσεων με διαστάσεις και υλικό.
- Τεχνική έκθεση ευρημάτων, επισκευών και συναρμολόγησης της αντλίας όπου θα αναγράφονται όλα τα ακτινικά, αξονικά διάκενα της μηχανής όπως περιγράφονται στην παράγραφο 2.1.4 και στην παράγραφο 6.8.1 του manual.

2.1.6. Συντήρηση Κινητήρα αντλίας

Ο Αντισυμβαλλόμενος θα αφαιρέσει το ρότορα από το στάτη και εν συνεχεία θα εκτελέσει τις παρακάτω μετρήσεις και ελέγχους εκτίμησης κατάστασης τυλιγμάτων.

2.1.6.1 Ηλεκτρικές μετρήσεις τυλίγματος Στάτη.

Ο Αντισυμβαλλόμενος αφού εκτελέσει οπτικό έλεγχο του τυλίγματος για εμφανή προβλήματα του τυλίγματος από ηλεκτρικές εκκενώσεις στα άκρα του τυλίγματος και στις μετωπιαίες συνδέσεις θα προχωρήσει σε καθαρισμό του στάτη με ξηρό πάγο.

Θα διαπιστώσει εάν πρόκειται για κατασκευή GVPI , εάν στα άκρα του τυλίγματος στην πλευρά σύνδεσης με το δίκτυο έχει επίστρωση προστασίας από εκκενώσεις και θα επιβεβαιώσει την ποιότητα της μόνωσης με την εκτέλεση:

-Αντίσταση μόνωσης και δείκτη πόλωσης με χρήση Megger 5000V. (Η μέτρηση αυτή θα γίνει πριν και μετά τον καθαρισμό του τυλίγματος με ξηρό πάγο).

-Μέτρηση ωμικών αντιστάσεων των τριών φάσεων του τυλίγματος.

-AC hipot τεστ σε τάση 1,5 της ονομαστικής τάσης.

-Μέτρηση της χωρητικής και επαγωγικής αντίστασης του τυλίγματος. Μέτρησης εφαπτομένης δ (απώλειες μόνωσης τυλίγματος).

-Μέτρηση έντασης ηλεκτρικών εκκενώσεων με φορητό όργανα ανίχνευσης αρχής ελέγχου με ραδιοκύματα ή εναλλακτικά ανίχνευσης με ηχητικά κύματα.

Ο Αντισυμβαλλόμενος θα εκτελέσει ελέγχους στήριξης του πυρήνα του στάτη επί του κελύφους. Ο πυρήνας του στάτη θα ελεγχθεί με διαδικασία EL-CID ή με εναλλακτική μέθοδο επαγωγής μαγνητικού πεδίου επί του πυρήνα για τυχόν βραχυκυκλώσεις μεταξύ των ελασμάτων του πυρήνα και εκτίμηση απωλειών πυρήνα.

Επίσης ο Αντισυμβαλλόμενος θα ελέγξει και θα αντικαταστήσει εάν απαιτηθεί τα όργανα θερμοκρασίας τυλιγμάτων του στάτη.

Επίσης θα ελέγξει την κατάσταση των τυλιγμάτων αντιστάσεων θέρμανσης και θα αποκαταστήσει την λειτουργία τους.

2.1.6.2 Ηλεκτρικές μετρήσεις ρότορα Κινητήρα.

Ο Αντισυμβαλλόμενος θα ελέγξει την κατάσταση του κλωβού βραχυκυκλωμένου δρομέα ελέγχοντας το υλικό και τον τρόπο κατασκευής των μπαρών και των μετωπιαίων δακτυλίων βραχυκύκλωσης του κλωβού. Εάν υπάρχουν μετωπιαίοι δακτύλιοι συγκράτησης των δακτυλίων βραχυκύκλωσης αυτοί θα αφαιρεθούν για έλεγχο με εκτέλεση FPI τόσο στις μπάρες όσο και στους δακτύλιους βραχυκύκλωσης του κλωβού.

Οι έλεγχοι με FPI θα επεκταθούν στα πτερύγια του ανεμιστήρα ψύξεως, στο κόμπλερ και στα κομβία του άξονα.

Ο Αντισυμβαλλόμενος θα ελέγξει για τυχόν μπάρες με πρόβλημα και την κατάσταση του πυρήνα του ρότορα με επαγωγή μαγνητικού πεδίου στο πυρήνα του ρότορα με εφαρμογή εναλλασσόμενου ρεύματος ή με χρήση συσκευής growler ή εναλλακτικά αφού συναρμολογήσει τον κινητήρα να ελέγξει για τυχόν μεταβολές της έντασης του ρεύματος στάτη σε διφασική τροφοδότηση και αργή περιστροφή του ρότορα. Εναλλακτικές τυποποιημένες μέθοδοι ελέγχου κατάστασης μπαρών ρότορα και του πυρήνα σε κινητήρες μέσης τάσης που θα κατατεθούν στην προσφορά είναι αποδεκτές.

Ο Αντισυμβαλλόμενος θα πρέπει να έχει επαρκή εμπειρία αποκατάστασης συνδέσεων κλωβών βραχυκυκλωμένου δρομέα.

Η εργασία αποκατάστασης ευρύ προβλημάτων σε κλωβό βραχυκυκλωμένου δρομέα σε κινητήρες μέσης τάσης δεν αποτελούν αντικείμενο της παρούσας σύμβασης αλλά εάν απαιτηθεί τέτοια εργασία η αποζημίωσή της θα γίνει με διαδικασία διαπραγματεύσεων.

2.1.6.3 Έδρανα ρότορα κινητήρα.

Ο Αντισυμβαλλόμενος θα ελέγξει με διεισδυτικά υγρά και με υπερήχους τα έδρανα του κινητήρα και θα προχωρήσει σε αναγόμωση αυτών εάν διαπιστωθούν αστοχίες

του λευκού μετάλλου. Σε περίπτωση έδρασης με ένσφαιρους τριβείς αυτά θα προμηθευτούν από τη ΔΕΗ. Ο Αντισυμβαλλόμενος θα αντικαταστήσει τους λαβυρίνθους λαδιού με καινούργιους ειδικά στην περίπτωση ότι διαπιστωθεί ρύπανση του τυλίγματος του στάτη από ελαιώδεις επικαθήσεις.

2.1.6.4 Ψυγεία Κινητήρα.

Θα καθαρισθούν τα ψυγεία αέρος νερού με υδροβολή και θα αντικατασταθούν τα φίλτρα αέρος. Επίσης ο Αντισυμβαλλόμενος θα ελέγξει την καθαρότητα των καναλιών ψύξης του τυλίγματος στάτη και θα προχωρήσει σε καθαρισμό τους σε περίπτωση ρύπανσης.

2.1.7. Παραλαβή εργασιών αντλητικού συγκροτήματος.

Η παραλαβή εργασιών θα γίνει με δοκιμή της αντλίας και του κινητήρα στις εγκαταστάσεις της ΔΕΗ σε δύο φάσεις:

2.1.7.1. Δοκιμή της αντλίας κατά τη φάση πλήρωσης του Λέβητα.

Η αντλία θα συγκοινωνηθεί υδραυλικά και ηλεκτρικά και θα δοκιμασθεί με την ανακυκλοφορία της για ένα πρώτο έλεγχο για τυχόν διαρροές, θερμοκρασίες εδράνων, θερμοκρασίες τυλιγμάτων κινητήρα, ταλαντώσεις του συγκροτήματος. Ο Αντισυμβαλλόμενος οφείλει να αποκαταστήσει χωρίς επιπρόσθετη δαπάνη διαρροές από τις φλάντζες κατάθλιψης αναρρόφησης της αντλίας, διαρροές από μηχανικές στεγανοποιήσεις, διαρροές από τα κελύφη της αντλίας καθώς και διαρροές λαδιού από τους λαβυρίνθους των εδράνων αντλίας και κινητήρα.

2.1.7.2 Δοκιμή της αντλίας σε κανονική λειτουργία της Μονάδας.

Η αντλία θα δοκιμασθεί σε κανονική λειτουργία της Μονάδας με αντίθλιψη 110bar και θερμοκρασία τροφοδοτικού νερού 120°C και πίεση αναρρόφησης 5 barg. Η δοκιμή θα γίνει παρουσία του Αντισυμβαλλόμενουο οποίος υποχρεούται να αποκαταστήσει προβλήματα διαρροών όπως αυτά περιγράφηκαν παραπάνω. Η αντλία θα λειτουργεί χωρίς κανένα πρόβλημα δέσμευσης λειτουργίας από υψηλές θερμοκρασίες εδράνων, ταλαντώσεις, διαρροών τροφοδοτικού νερού για διάρκεια ενός έτους εγγύησης.

Εάν διαπιστωθεί πρόβλημα λειτουργίας που εμποδίζει την εκμετάλλευση της αντλίας και ο Αντισυμβαλλόμενος δεν το αποκαταστήσει κατά τη διάρκεια του πρώτου μήνα κανονικής λειτουργίας της Μονάδας ή εντός 1 εβδομάδας από την αιτία κράτησης της αντλίας θα επιβάλλονται τεχνικές ποινικές ρήτρες.

2.2. Συντήρηση Τροφοδοτικής αντλίας Μέσης Πίεσης 3X11WXH-5.

Η αντλία αυτή είναι του ίδιου σχεδιασμού με την τροφοδοτική αντλία Υ.Π. απλώς τα στοιχεία σχεδιασμού, πίεσης και θερμοκρασίας λειτουργίας είναι υποδεέστερα της παραπάνω τροφοδοτικής αντλίας. Οι εργασίες όλες θα γίνουν όπως περιγράφονται στις παραγράφους 2.1.1 έως και 2.1.4 και στην παράγραφο 6 του manual της Flowserve 10.06.50.10895 που επίσης επισυνάπτεται. Οι κυριότερες διαφορές των εργασιών περιγράφονται παρακάτω. Στο τεχνικό εγχειρίδιο της Flowserve περιλαμβάνονται σχέδιο – τομή της αντλίας (3X10WXH-5) της μηχανικής στεγανοποίησης (94908) σχέδιο κόμπλερ (OF – 14866) τεχνικό εγχειρίδιο του κινητήρα της αντλίας, γενικά εγχειρίδια των υπό προμηθευτών της μηχανικής στεγανοποίησης του κόμπλερ.

2.2.1. Μεταφορά της αντλίας.

Η αντλία και ο κινητήρας της θα παραδοθούν στο Μηχανουργείο της ΔΕΗ/ΑΗΣ Κερατέας-Λαυρίου. Ο Αντισυμβαλλόμενος οφείλει να πακτώσει τα στροφεία αντλίας και κινητήρα όπως περιγράφεται στην παράγραφο 2.1.1.

2.2.2. Αποσυναρμολόγηση της αντλίας.

Η διαδικασία αποσυναρμολόγησης της αντλίας περιγράφεται στις παραγράφους 6.5 και 6.6 του manual της Flowserve και είναι της ίδιας αρχής με αυτές της παραγράφου 2.1.2. Ο Αντισυμβαλλόμενος θα καταγράψει τα πάχη των προσθηκών που καθορίζουν το αξονικό διάκενο του δίσκου εξισορρόπησης 3126.2 έως και 6 και των προσθηκών 3126.1 που καθορίζουν την αξονική θέση λειτουργίας της αντλίας. Ο Αντισυμβαλλόμενος θα αναγνωρίσει και θα καταγράψει όλα τα εξαρτήματα της αντλίας κατά τη διαδικασία αποσυναρμολόγησης. Δεν απαιτείται να ελεγχθεί στην αντλία αυτή η φθορά ωστικού τριβέως.

2.2.3. Εργασίες επιθεώρησης – επισκευής κύριων εξαρτημάτων αντλίας.

2.2.3.1.Γενικές Εργασίες.

Α. Καθαρισμός εξαρτημάτων.

Αντίστοιχη μεθοδολογία με αυτή της παραγράφου 2.1.3.1.Α.

Τα υδραυλικά μέρη άντλησης νερού (πτερωτές, οδηγητικά πτερύγια) θα καθαρισθούν με υαλοβολή ενώ τα κελύφη (1130, 1140, 1150) με μίγμα υαλοβολής και αμμοβολής. Τα υπόλοιπα εξαρτήματα σε λουτρό υπερήχων.

Β. Μηχανουργικές μετρήσεις και μελέτη σχεδιασμού εξαρτημάτων αντλίας.

Μετά τον καθαρισμό των εξαρτημάτων ο Αντισυμβαλλόμενος θα εκπονήσει με τη μέθοδο reverse engineering κατασκευαστικά σχέδια βασικών εξαρτημάτων της αντλίας.

Τα βασικά εξαρτήματα είναι ο άξονας (2100), σφήνες άξονα (6700.1,2,3) τα κελύφη (1150.1,2,3), δίσκος εξισορρόπησης (6210 - 6220), δακτύλιοι άξονα (2482, 2530), περικόχλια (3712, 7411) και τα οδηγητικά πτερύγια – diffuser (1410.1,2).

Βάσει των σχεδίων αυτών ο Αντισυμβαλλόμενος θα καθορίσει όλες τις ονομαστικές συναρμογές των παρακάτω ζευγών εξαρτημάτων όπως: (1150.1 – 1150.2) / (1150.2-1150.3) / (1150.3-1140) / (1150.1-1130) / (1140 – 1410.2) / (1410.2 – 1150.3) / (1150.1 – 1410.1) / (1150.2-1410.2) / (6220 – 1140) / (1140 – 4110).

Επίσης ο Αντισυμβαλλόμενος θα ελέγξει όλα τα ακτινικά διάκενα της αντλίας με μετρήσεις ονομαστικών διαμέτρων των επιμέρους συνεργαζόμενων εξαρτημάτων όπως αυτά καθορίζονται στην παράγραφο 6.8.1.

Εκτός από τον καθορισμό των υλικών των παραπάνω βασικών εξαρτημάτων ο Αντισυμβαλλόμενος θα εκτελέσει σκληρομετρήσεις σε όλες τις επιφάνειες συναρμογής όπως αυτές καθορίσθηκαν παραπάνω καθώς επίσης στους φθειρόμενους δακτυλίους των πτερωτών και των οδηγητικών πτερυγίων. Σκληρομετρήσεις, θα εκτελεσθούν στους δίσκους εξισορρόπησης και θα καθορισθεί η διαδικασία επιφανειακης βαφής στις συνεργαζόμενες επιφάνειες του κινητού με τον σταθερό δίσκο.

Γ. Εκτέλεση ΜΚΕ

Μετά τις παραπάνω εργασίες καθαρισμού και reverse engineering ο Αντισυμβαλλόμενος θα εκτελέσει ΜΚΕ βάσει προγράμματος του τεχνικού της Flowserve που θα περιλαμβάνει κατ' ελάχιστο τους εξής ελέγχους:

i) FPI στα κομβία του άξονα, στους σφηνόδρομους και στις αλλαγές διαμέτρου του άξονα.

ii) U.T. και FPI στα tie rods

iii) FPI στις πτερωτές της αντλίας, στα οδηγητικά πτερύγια και στους δίσκους εξισορρόπησης.

Iv) DP στα σημεία αλλαγής γεωμετρίας σπειροειδών κελυφών αναρρόφησης – κατάθλιψης.

2.2.3.2 Επισκευή κύριων εξαρτημάτων.

Μετά την εκτέλεση όλων των εργασιών επιθεώρησης των εξαρτημάτων που περιγράφονται στην παραπάνω παράγραφο (2.2.3.1) καθώς και στην παράγραφο 6.7 του τεχνικού εγχειριδίου της manual ο Αντισυμβαλλόμενος θα προχωρήσει στις παρακάτω εργασίες επισκευής εφόσον βρεθούν αποκλίσεις από τα επιτρεπτά όρια.

α) Επισκευή όλων των επιφανειών στεγανοποίησης και συναρμογής σταθερών εξαρτημάτων.

α.1). Σταθερά κελύφη αντλίας 1150.1-1150.2 και 1150.3. Επίπεδο αναφοράς το εσωτερικό τρύμα του κάθε κελύφους. Λείανση της υποδοχής στεγανοποιητικού δακτυλίου o-ring. Λείανση της ακτινικής επιφάνειας στεγανοποίησης των δύο κελυφών έλεγχος στεγανότητας με χρώμα. Τραχύτητα επιφανειών όχι μεγαλύτερη των 4 Ra. Εφόσον οι επιφάνειες αυτές έχουν φθορές λόγω τριβών ή ροής από διαρροή νερού ο Αντισυμβαλλόμενος θα αποκαταστήσει την επιπεδότητα και θα αναγομώσει τις επιφάνειες αυτές στις ονομαστικές διαστάσεις που θα έχει παραδώσει ο Αντισυμβαλλόμενος . Η αναγόμωση θα γίνει με μέθοδο laser ή EBW με κατάλληλο ανοξείδωτο σύρμα για φεριτικό χάλυβα ώστε να μειωθεί η θερμική καταπόνηση του υλικού. Επιτρεπτό πάχος ολικής αναγόμωσης έως 0,5mm. Για μεγαλύτερα αναγκαία πάχη αναγόμωσης θα γίνεται μερική αναγόμωση ώστε να αποκαθίσταται η σχετική θέση των επιμέρους εξαρτημάτων, ως προς τα συνεργαζόμενα κινητά. Λείανση της ακτινικής συναρμογής των κελυφών. Εάν η συναρμογή αυτή είναι εκτός ορίων λόγω τριβών ο Αντισυμβαλλόμενος θα αναγομώσει τη αρσενική πατούρα έως με αναγόμωση και κατεργασία έως πάχος 0,25mm (δεν αναμένονται μεγαλύτερες φθορές). Υλικό αναγόμωσης ανοξείδωτο σύρμα κατάλληλο για φεριτικό ανοξείδωτο χάλυβα.

Καθαρισμός σπειρωμάτων ανάρτησης κελυφών. Έλεγχος παραλληλότητας και καθετότητας επιπέδων ως προς επίπεδο αναφοράς μετά από όλες τις κατεργασίες ελάχιστη απόκλιση 0,05mm.

α.2) Σταθερό κέλυφος αντλίας με σπειροειδές κέλυφος κατάθλιψης (1150.3-1140).Επίπεδο αναφοράς του 1150.3 όπως παραπάνω. Λείανση της υποδοχής στεγανοποιητικού δακτυλίου o-ring. Λείανση της ακτινικής επιφάνειας στεγανοποίησης των δύο κελυφών έλεγχος στεγανότητας με χρώμα. Τραχύτητα επιφανειών όχι μεγαλύτερη των 4 Ra. Εάν απαιτηθεί αναγόμωση της επιφάνειας στεγανοποίησης θα αναγομωθεί μόνο το κέλυφος 1150.3. Λείανση ακτινικής συναρμογής των δύο εξαρτημάτων. Αποκατάσταση ακτινικής συναρμογής στις ονομαστικές διαστάσεις εάν απαιτηθεί θα γίνει με αναγόμωση μόνο του εξαρτήματος 1150.3.

α.3) Σταθερό κέλυφος αντλίας με κέλυφος αναρρόφησης.(1150.1-1130).Επίπεδο αναφοράς του 1150.1 ως άνω. Λείανση επιφανειών υποδοχής o-ring. Λείανση κατακόρυφης επιφάνειας στεγανοποίησης των δύο τεμαχίων. Λείανση των επιφανειών ακτινικής συναρμογής των δύο τεμαχίων. Εάν απαιτηθεί αναγόμωση ακτινικής συναρμογής αυτή θα γίνει μόνο με αναγόμωση στο κέλυφος 1150.1. Καθαρισμός σπειρωμάτων τεμαχίων.

α.4) Οδηγητικά πτερύγια 1410.1 με κελύφη 1150.1,2 και 3. Επιφάνεια αναφοράς των οδηγητικών πτερυγίων οι εσωτερικές κυλινδρικές επιφάνειες συνεργασίας με τις πτερωτές. Στα σημεία επαφής των οδηγητικών πτερυγίων με τις επιφάνειες των κελυφών 1150.1,2 λόγω πίεσης επιφάνειας υπάρχει πιθανότητα να υπάρχουν φθορές. Ο Αντισυμβαλλόμενος θα αναγομώσει τα σημεία φθοράς και θα κατεργασθεί εκ νέου τα τεμάχια στις ονομαστικές διαστάσεις ώστε η σχετική αξονική θέση των οδηγητικών πτερυγίων ως προς τα κελύφη και τις πτερωτές να μην αλλάξει. Αναγόμωση των σταθερών δακτυλίων φθοράς 1500.1 και 1500.2 με διαδικασία νε ανοξείδωτο σύρμα κατάλληλο για φεριτικό ανοξείδωτο χάλυβα με laser ή EBW ή άλλη μέθοδο χαμηλού θερμικού επηρεασμού.. Έλεγχος της γεωμετρίας όλων των εξαρτημάτων ως προς τις επιφάνειες αναφοράς. Απόκλιση παραλληλότητας των επιφανειών δακτυλίων φθοράς ως προς επίπεδα αναφοράς 0,025mm.

α.5) Οδηγητικό πτερύγιο 1410.2. Επιφάνεια αναφορά η εσωτερική κυλινδρική επιφάνεια συνεργασίας με την πτερωτή 2200.3 το εξάρτημα αυτό συνεργάζεται με

το κέλυφος 1150.2 και με το σπειροειδές κέλυφος κατάθλιψης 1140. Λείανση επιφανειών συναρμογής και στεγανοποίησης με τα δύο αυτά εξαρτήματα. Αναγόμωση της επιφάνειας συναρμογής με το σπειροειδές κέλυφος ώστε να επιτευχθεί η απαιτούμενη σύσφιξη.
α.6) Σπειροειδές κέλυφος κατάθλιψης αντλίας 1140. Επιφάνεια αναφοράς το εσωτερικό τρίμα διέλευσης της πτερωτής 2200.3. Λείανση της επιφάνειας στεγανοποίησης της φλάντζας κατάθλιψης ,ποιότητα επιφάνειας Ra 4μm. Λείανση επιφάνειας φλάντζας σύνδεσης εκκενωτικού αντλίας. Έλεγχος με χρώμα. Απόκλιση παραλληλότητας επιφάνειας φλάντζας κατάθλιψης και τρίματος εγκατάστασης κελύφους μηχανικής στεγανοποίησης και σταθερού δίσκου εξισορρόπησης (6220)0,01mm.
α.7) Σπειροειδές κέλυφος αναρρόφησης αντλίας 1130. Επιφάνεια αναφοράς το εσωτερικό τρίμα διέλευσης του άξονα 2100. Λείανση της επιφάνειας στεγανοποίησης της φλάντζας αναρρόφησης ,ποιότητα επιφάνειας Ra 4μm. Αναγόμωση του δακτυλίου φθοράς 1500.1 για αποκατάσταση ακτινικών διακένων.. Απόκλιση παραλληλότητας επιφάνειας φλάντζας με την επιφάνεια εγκατάστασης κελύφους μηχανικής στεγανοποίησης και του δακτυλιου φθοράς 0,05mm.

β) Επισκευή πτερωτών.
Επιφάνεια αναφοράς όλων των πτερωτών είναι το εσωτερικό τρίμα των πτερωτών διέλευσης του άξονα της αντλίας. Όλες οι υπόλοιπες επιφάνειες (δακτυλίων φθοράς και εξωτερικής διαμέτρου αντλίας παράλληλες προς την επιφάνεια αναφοράς κατά 0,01mm.
Αναμενόμενα σημεία φθοράς των πτερωτών είναι οι επιφάνειες επαφής μιας πτερωτής με τις αντίστοιχες πτερωτές της προηγούμενης ή επόμενης βαθμίδας. Οι φθορές αυτές θα κατεργασθούν και εν συνεχεία θα αναγομωθούν εφόσον είναι μεγαλύτερες των 0,05mm. Η αναγόμωση θα είναι με δέσμη laser ή EBW ώστε η θερμική ζώνη επηρεασμού να είναι μικρή. Οι επιφάνειες αυτές κατ' ελάχιστο όλες θα λειανθούν με Ra ≈ 0.4μm.
Τα ακτινικά διάκενα της αντλίας στους δακτυλίους φθοράς θα αποκατασταθούν με αναγόμωση των σταθερών δακτυλίων. Σε περίπτωση όπου η φθορά των κινητών δακτυλίων φθοράς είναι μεγαλύτερη από 1mm τότε οι δακτύλιοι θα αντικατασταθούν με καινούργιους που θα κατασκευάσει ο Αντισυμβαλλόμενος από υλικό AISI 420 όπως προδιαγράφεται στο σχέδιο της αντλίας με επίτευξη επιφανειακής σκλήρυνσης με χρήση τόξου από laser. Η μέθοδος σκλήρυνσης των κινητών δακτυλίων φθοράς θα ελεγχθεί πρώτα σε δείγμα όπου θα ελεγχθεί με ρεπλίκα η κρυσταλλογραφική δομή του ωστενίτη και επίτευξη σκληρότητας 300-350HB. Οι κινητοί δακτύλιοι φθοράς θα εγκατασταθούν επί των πτερωτών με σύσφιξη 0,05mm. Όλες οι πτερωτές εφόσον αντικατασταθούν δακτύλιοι ή αναγομωθούν στις επιφάνειες φθοράς θα ελεγχθούν ως προς την επιφάνεια αναφοράς τους και εν συνεχεία θα ζυγοσταθμιστούν σε κατάλληλη επίπεδη μηχανή ζυγοστάθμισης. Απαιτούμενη ποιότητα ζυγοστάθμισης
Εάν κάποια πτερωτή έχει μη επισκευάσιμη φθορά αυτή θα αντικατασταθεί με καινούργια που θα παραδώσει η ΔΕΗ.

γ) Δίσκοι εξισορρόπησης. Οι δίσκοι θα αντικατασταθούν σύμφωνα με τις απαιτήσεις της παραγράφου 6.7.5 του τεχνικού εγχειριδίου της Flowserve. Οι δίσκοι εάν απαιτηθεί να αντικατασταθούν με καινούργιους αυτούς θα τους παραδώσει η ΔΕΗ.
Η συντήρηση των εγκατεστημένων περιλαμβάνει τη λείανση των επιφανειών στεγανοποίησης των δύο δίσκων απαιτούμενη τραχύτητα 0,4μm.Έλεγχος στεγανότητας επιφανειών με χρώμα. Αναγομώσεις για την επίτευξη συναρμογών και αποκατάσταση φθορών επιτρέπεται μόνο στο σταθερό δίσκο εξισορρόπησης.

δ) Άξονας αντλίας Ο άξονας της αντλίας θα ελεγχθεί ως προς την μόνιμη παραμόρφωσή του στηριγμένος σε ράουλα επί των κομβίων του. Η ένδειξη TIR στα

κομβία καθώς θα περιστρέφεται θα είναι μικρότερη του 0,01mm και στο κέντρο του στροφείου μικρότερη από 0,05mm. Θα γίνει λείανση άξονα στις θέσεις των κομβίων.

ε) Κοχλίες λυόμενων συνδέσεων. Ο Αντισυμβαλλόμενος θα καθαρίσει όλα τα σπειρώματα των κοχλιών και των κοχλιοτομημένων οπών επί των κελυφών και θα κατασκευάσει τυχόν κοχλίες που δεν είναι επισκευάσιμοι.

2.2.4. Συναρμολόγηση αντλίας.

Η συναρμολόγηση της αντλίας θα ξεκινήσει μετά την ολοκλήρωση όλων των εργασιών επισκευής και κατασκευής εξαρτημάτων που περιγράφονται στην παράγραφο 2.2.3.2. Η ΔΕΗ θα προμηθεύσει στον Αντισυμβαλλόμενο ένα (1) σετ O – ring, δύο (2) καινούργιες μηχανικές στεγανοποιήσεις και όποιο κύριο ανταλλακτικό είναι μη επισκευάσιμο. Ο Αντισυμβαλλόμενος θα συναρμολογήσει την αντλία σύμφωνα με τις απαιτήσεις των παραγράφων 6.8 έως και 6.11 του τεχνικού εγχειριδίου του κατασκευαστή και με εξοπλισμό αντίστοιχο της παραγράφου 2.1.4. Η διαδικασία συναρμολόγησης είναι αντίστοιχη αυτή της παραγράφου 2.1.4 και ο Αντισυμβαλλόμενος οφείλει να καταγράψει τα ολικά αξονικά και ακτινικά διάκενα της αντλίας, το διάκενο δίσκων εξισορρόπησης και τα πάχη των αντίστοιχων προσθηκών.

2.2.5. Υδροστατική δοκιμή της αντλίας.

Η διαδικασία υδροστατικής δοκιμής της αντλίας αντίστοιχη με αυτή της παραγράφου 2.1.5 σε πίεση 16 barg. Ο Αντισυμβαλλόμενος μετά την παράδοση των αντλιών στον ΑΗΣ Κερατέας-Λαυρίου θα παραδώσει τεχνική έκθεση που θα περιλαμβάνει:

- Κατασκευαστικά σχέδια των εξαρτημάτων της αντλίας.
- Τις τελικές συναρμογές όλων των εξαρτημάτων της αντλίας.
- Πίνακα υλικών και τυχόν επιφανειακών κατεργασιών όλων των κύριων εξαρτημάτων.
- Πίνακα αναλώσιμων υλικών στεγανοποίησης και λυόμενων συνδέσεων με διαστάσεις και υλικά.
- Τεχνική έκθεση ευρημάτων, επισκευών και συναρμολόγησης της αντλίας με πίνακες διακένων και πάχη προσθηκών ρύθμισης αυτών.

2.2.6. Συντήρηση Κινητήρα αντλίας

Ο Αντισυμβαλλόμενος θα αφαιρέσει το ρότορα από το στάτη και εν συνεχεία θα εκτελέσει τις παρακάτω μετρήσεις και ελέγχους εκτίμησης κατάστασης τυλιγμάτων.

2.2.6.1 Ηλεκτρικές μετρήσεις τυλίγματος Στάτη.

Ο Αντισυμβαλλόμενος αφού εκτελέσει οπτικό έλεγχο του τυλίγματος για εμφανή προβλήματα του τυλίγματος θα επιβεβαιώσει την ποιότητα της μόνωσης με την εκτέλεση:

-Αντίσταση μόνωσης με και δείκτη πόλωσης με χρήση Megger 500V.

-Μέτρηση ωμικών αντιστάσεων των τριών φάσεων του τυλίγματος.

-AC hipot τεστ σε τάση 1,5 της ονομαστικής τάσης.

Ο Αντισυμβαλλόμενος θα εκτελέσει ελέγχους στήριξης του πυρήνα του στάτη επί του κελύφους. Ο πυρήνας του στάτη θα ελεγχθεί με διαδικασία EL-CID ή με εναλλακτική μέθοδο επαγωγής μαγνητικού πεδίου επί του πυρήνα για τυχόν βραχυκυκλώσεις μεταξύ των ελασμάτων του πυρήνα και εκτίμηση απωλειών πυρήνα.

Επίσης ο Αντισυμβαλλόμενος θα ελέγξει και θα αντικαταστήσει εάν απαιτηθεί τα όργανα θερμοκρασίας τυλιγμάτων του στάτη.

Επίσης θα ελέγξει την κατάσταση των τυλιγμάτων αντιστάσεων θέρμανσης και θα αποκαταστήσει την λειτουργία τους.

2.1.6.2 Ηλεκτρικές μετρήσεις ρότορα Κινητήρα.

Ο Αντισυμβαλλόμενος θα ελέγξει την κατάσταση του κλωβού βραχυκυκλωμένου δρομέα ελέγχοντας το υλικό και τον τρόπο κατασκευής των μπαρών και των μετωπιαίων δακτυλίων βραχυκύκλωσης του κλωβού. Εάν υπάρχουν μετωπιαίοι δακτύλιοι συγκράτησης των δακτυλίων βραχυκύκλωσης αυτοί θα αφαιρεθούν για έλεγχο με εκτέλεση FPI τόσο στις μπάρες όσο και στους δακτύλιους βραχυκύκλωσης του κλωβού.

Οι έλεγχοι με FPI θα επεκταθούν στα πτερύγια του ανεμιστήρα ψύξεως, στο κόμπλερ και στα κομβία του άξονα.

Ο Αντισυμβαλλόμενος θα ελέγξει για τυχόν μπάρες με πρόβλημα και την κατάσταση του πυρήνα του ρότορα με επαγωγή μαγνητικού πεδίου στο πυρήνα του ρότορα με εφαρμογή εναλλασσόμενου ρεύματος ή με χρήση συσκευής growler ή εναλλακτικά αφού συναρμολογήσει τον κινητήρα να ελέγξει για τυχόν μεταβολές της έντασης του ρεύματος στάτη σε διφασική τροφοδότηση και αργή περιστροφή του ρότορα. Εναλλακτικές τυποποιημένες μέθοδοι ελέγχου κατάστασης μπαρών ρότορα και του πυρήνα σε κινητήρες μέσης τάσης που θα κατατεθούν στην προσφορά είναι αποδεκτές.

Ο Αντισυμβαλλόμενος θα πρέπει να έχει επαρκή εμπειρία αποκατάστασης συνδέσεων κλωβών βραχυκυκλωμένου δρομέα.

Η εργασία αποκατάστασης ευρύ προβλημάτων σε κλωβό βραχυκυκλωμένου δρομέα δεν αποτελούν αντικείμενο της παρούσας σύμβασης αλλά εάν απαιτηθεί τέτοια εργασία η αποζημίωσή της θα γίνει με διαδικασία διαπραγματεύσεων.

2.1.6.3 Συναρμολόγηση κινητήρα.

Ο κινητήρας θα συναρμολογηθεί με καινούργια ρουλεμάν και στεγανοποιητικά εδράσεων και θα δοκιμασθεί εν κενώ.

2.2.7. Παραλαβή εργασιών τροφοδοτικών αντλιών Μ.Π.

Η παραλαβή εργασιών θα γίνει με δοκιμή και των δύο αντλιών που θα επισκευάσει ο Αντισυμβαλλόμενος με διαδικασίες και εγγυήσεις αντίστοιχες αυτές της παραγράφου 2.1.7.

2.3. Συντήρηση αντλίας κυκλοφορίας θαλάσσης 45 APMA.

Η συντήρηση της αντλίας θα εκτελεσθεί σύμφωνα με τις απαιτήσεις του manual της Flowserve 10.07.50.10897. Στο εγχειρίδιο αυτό του κατασκευαστή βρίσκεται σχέδιο της αντλίας 45 APMA500XE51, του κινητήρα 3A040F266 του κόμπλερ OF – 14888. Η αναγνώριση όλων των εξαρτημάτων της αντλίας θα γίνεται βάσει της κωδικοποίησης του σχεδίου APMA500XE51 εκτός εάν γίνεται αναφορά σε άλλο σχέδιο.

2.3.1. Μεταφορά της αντλίας.

Η αντλία αποτελείται από το εξωτερικό κέλυφος όπως περιγράφεται στην παράγραφο 4.3.1 σελ. 36 του manual (external shell) το εσωτερικό τμήμα της αντλίας που αναφέρεται ως pump pull - out element στη σελ. 37 του manual που αποτελείται από ένα σύνολο αξόνων μετάδοσης κίνησης και αντιστήριξης αυτών και το κυρίως τμήμα της αντλίας που αποτελείται από την πτερωτή (1200), το εσωτερικό κέλυφος (33), το οδηγητικό πτερύγιο (06), τον κάτω άξονα (1107) και την προστατευτική κολώνα αντιστήριξης (34C).

Ο Αντισυμβαλλόμενος θα παραλάβει από τις εγκαταστάσεις του ΑΗΣ Κερατέας-Λαυρίου το κυρίως τμήμα της αντλίας συναρμολογημένο, τους τρεις (3) άξονες της

αντλίας (1102, 1107 και 1104) αποσυναρμολογημένες τις προστατευτικές κολώνες των αξόνων (inner columns 34c, d και e), το στήριγμα του κινητήρα που αποτελείται από τα τμήματα 17 και 19α, το οδηγητικό κουζινέτο (19) και σε ένα ξυλοκιβώτιο θα τοποθετηθούν επιμέρους ανταλλακτικά της αντλίας όπως τα τρία (3) ενδιάμεσα κόμπλερ της αντλίας (0710b, 2119α, 0006), το κέλυφος του ωστικού τριβέα συναρμολογημένο (Λεπτομέρεια Χ του σχεδίου αντλίας), το κέλυφος στεγανοποίησης άξονα συναρμολογημένο (item2 και λεπτομέρεια Υ του σχεδίου) και εξαρτήματα του κόμπλερ με τον κινητήρα όπως αυτά περιγράφονται στο σχέδιο OF – 14888. Οι πλύμνες των ημισυνδέσμων του κόμπλερ με τον κινητήρα θα παραδοθούν επί των αξόνων αντλίας και κινητήρα. Επίσης στο ξυλοκιβώτιο θα είναι και το σετ των κοχλιών, περικοχλίων όλων των λυόμενων συνδέσεων της αντλίας που περιγράφονται στην παράγραφο 7.2 και 7.1.3 του τεχνικού εγχειριδίου του manual. Τον κινητήρα θα τον παραλάβει αφού αποκοχλιώσει τα δύο (2) ψυγεία αέρος – αέρος ώστε να είναι δυνατή η μεταφορά του.

Ο Αντισυμβαλλόμενος αφού εξασφαλίσει τους άξονες (1107) της κύριας αντλίας και του κινητήρα έναντι σχετικής κίνησης ως προς τους αντίστοιχους στάτες θα μεταφέρει τον παραπάνω εξοπλισμό στις εγκαταστάσεις του.

2.3.2. Επιθεώρηση και επισκευή εξαρτημάτων αντλίας.

Ο Αντισυμβαλλόμενος θα αποσυναρμολογήσει το κύριο τμήμα της αντλίας σύμφωνα με τις οδηγίες της παραγράφου 7.2.1 του εγχειριδίου της Flowserve.

Ο Αντισυμβαλλόμενος εν συνεχεία θα προχωρήσει σε μηχανικό καθαρισμό όλων των εξαρτημάτων με υαλοβολή ώστε να μην επηρεαστεί η τραχύτητα των οδηγητικών πτερυγίων και της πτερωτής. Τα μικρά εξαρτήματα και οι άξονες θα καθαρισθούν χειρωνακτικά.

Ο Αντισυμβαλλόμενος οφείλει να εκτελέσει:

α) ΜΚΕ στους άξονες (FPI) στην πτερωτή και στα οδηγητικά πτερύγια (FPI), στα οδηγητικά έδρανα (19 και 19α) και στις αλλαγές διατομών των κελυφών και οδηγητικών πτερυγίων (19, 17 και19α).

β) Να ελέγξει την παραμόρφωση (run out) των αξόνων (1102, 1107 και 1104) με μεθοδολογία που περιγράφεται στα manual της Flowserve.

γ) Να ελέγξει τα ακτινικά διάκενα των κουζινέτων της αντλίας και να τα αποκαταστήσει εφόσον υπάρχουν αποκλίσεις από τα επιτρεπτά όρια που θα δοθούν από τον τεχνικό της Flowserve. Ως αντιτριβικό υλικό ο Αντισυμβαλλόμενος θα χρησιμοποιήσει το βιομηχανικό υλικό Orkote το οποίο θα κατεργασθεί κατάλληλα για να επιτύχει την απαιτούμενη σύσφιξη στο σώμα του εδράνου, το ακτινικό διάκενο και τα απαιτούμενα αυλάκια ψύξης.

δ) Τα χιτώνια του άξονα 0710(α) θα αντικατασταθούν μόνο εάν διαπιστωθεί τυχόν φθορά μη επισκευάσιμη. Ο Αντισυμβαλλόμενος σε περίπτωση που απαιτηθεί κατασκευή νέων χιτωνίων αυτά θα κατασκευασθούν από υλικό 531883 (Duplex Stainless Steel) ή εναλλακτικά 316L κατ' ελάχιστο. Το ίδιο θα ισχύει και για τα χιτώνια 709,710 και 710b.

ε) Έλεγχος ακτινικών διακένων δακτυλίων φθοράς της πτερωτής και του κελύφους (λεπτομέρεια Ζ σχεδίου). Η αντικατάσταση θα γίνει εφόσον υπάρχει σημαντική φθορά και τα διάκενα έχουν υπερβεί σημαντικά τα ονομαστικά. Η αντικατάσταση θα γίνει σύμφωνα με τις υποδείξεις της παραγράφου 7.5 του εγχειριδίου της Flowserve και κυρίως με αντικατάσταση του σταθερού δακτυλίου με αντίστοιχο oversize από υλικό 531803 ή κατ' ελάχιστο 316L.

στ) Έλεγχος των οδηγών του εσωτερικού κελύφους (33) και του οδηγού (19) ως προς τις αντίστοιχες σταθερές αναμονές του εξωτερικού κελύφους (34.b, 34.α και 34). Ο Αντισυμβαλλόμενος θα αποκαταστήσει τυχόν διαβρώσεις επί των οδηγών των εξαρτημάτων (19) και (33) με αναγομώσεις με ανοξείδωτο ηλεκτρόδιο 308L. και εν συνεχεία κατεργασία των οδηγών.

ζ) Καθαρισμός των σπειρωμάτων όλων των λυόμενων συνδέσεων της αντλίας.

η) Κατασκευή καινούργιων ανοξείδωτων σφηνών πείρων, κοχλιώσεων που αστόχησαν κατά τη φάση αποσυναρμολόγησης

2.3.3. Συναρμολόγηση της αντλίας.

Ο Αντισυμβαλλόμενος θα παραδώσει συναρμολογημένα τα εξής μέρη της αντλίας:

- Την κυρίως αντλία που αποτελείται από την πτερωτή (1200) τον κάτω άξονα (1107) το εσωτερικό κέλυφος (06) και το οδηγητικό πτερύγιο (33) συναρμολογημένα ως ενιαίο εξάρτημα.
- Το στήριγμα του κινητήρα συναρμολογημένο με τον άνω άξονα (1102) του ωστικού τριβέα (Λεπτομέρεια Χ) και τον στυπιοθάλαμο (Λεπτομέρεια Υ). Όλη η κατασκευή αυτή θα ελεγχθεί ως προς την παραμόρφωση (run – out) σε ράουλα που θα κατασκευάσει ο Αντισυμβαλλόμενος , έχοντας πακτώσει τα σταθερά μέρη.
- Τους άξονες (1104) με τα χιτώνια 0710α συναρμολογημένα σε αυτούς.
- Τις εσωτερικές κολώνες 34c και 34d συναρμολογημένους με τα κουζινέτα 0900α καθώς

και την εσωτερική κολώνα 34α.

- Τα υπόλοιπα ανταλλακτικά που περιγράφονται στην παράγραφο 2.3.1.

Όλα τα παραπάνω θα παραδοθούν στον ΑΗΣ Κερατέας-Λαυρίου. Επίσης για να πιστοποιηθούν οι εργασίες ο Αντισυμβαλλόμενος πρέπει να καταθέσει πλήρη τεχνική έκθεση που θα περιλαμβάνει:

α) Κατασκευαστικά σχέδια των αξόνων 1102, 1104, 1107, των χιτωνίων 0709, 0710, 0710α και b, των κουζινέτων 0900, 0900α και 0900b, των οδηγών (19) και του εσωτερικού κελύφους (33).

β) Έκθεση ευρημάτων των ΜΚΕ.

γ) Έκθεση όλων των εργασιών επισκευής και συναρμολόγησης όπου θα υπάρχει και πίνακας όλων των αναλωσίμων υλικών και λυόμενων συνδέσεων.

Η συναρμολόγηση της αντλίας θα γίνει με καινούργια στεγανοποιητικά υλικά (Ο – ring παρεμβάσματα) που θα παραδώσει η ΔΕΗ, ενώ τα υπόλοιπα υλικά όπως και όλα τα αναλώσιμα των λυόμενων συνδέσεων που θα αστοχήσουν κατά τη διάρκεια της αποσυναρμολόγησης θα παραδοθούν από τον Αντισυμβαλλόμενο.

2.3.4 Συντήρηση Κινητήρα.

Ο Αντισυμβαλλόμενος θα εκτελέσει τις ίδιες ακριβώς μετρήσεις και ελέγχους όπως περιγράφονται στην παράγραφο 2.1.6.1 και 2.1.6.2. Εν συνεχεία θα συναρμολογήσει τον κινητήρα με καινούργιους ένσφαιρους τριβείς που θα παραδώσει η ΔΕΗ.

2.3.5 Παραλαβή εργασιών αντλητικού συγκροτήματος.

Οι δύο αντλίες που θα συντηρήσει ο Αντισυμβαλλόμενος θα τεθούν σε λειτουργία παρουσία του. Οι εργασίες θα παραληφθούν αρχικά εάν όλες οι λειτουργικές ενδείξεις είναι ικανοποιητικές. Θερμοκρασίες εδράνων, διαρροές σαλαμαστρών, ταλαντώσεις αντλίας με ανοικτό το κλαπέ κατάθλιψης σε χαμηλά επίπεδα, θερμοκρασίες τυλιγμάτων κινητήρα σε κανονικά επίπεδα.

Οι εργασίες συντήρησης στην κύρια αντλία στα έδρανα αντλίας και κινητήρα θα είναι υπό εγγύηση ενός έτους. Εάν η αντλία αστοχήσει σε αίτιο που οφείλεται σε κακοτεχνία του Αντισυμβαλλόμενου θα επιβάλλονται τεχνικές ποινικές ρήτρες.

2.4 Συντήρηση αντλίας συμπυκνώματος 243 – *APKD-4.*

Η συντήρηση της αντλίας θα εκτελεσθεί σύμφωνα με τις απαιτήσεις του τεχνικού εγχειριδίου της Flowserve 10.07.50.10896. Στο τεχνικό εγχειρίδιο αυτό βρίσκεται στο γενικό σχέδιο της αντλίας 243APKD500E – 7 του κόμπλερ OF – 14923 της μηχανής στεγανοποίησης 949262 και του κινητήρα τύπου AEVE-WT001.

2.4.1 Μεταφορά της αντλίας.

Ο Αντισυμβαλλόμενος θα παραλάβει την αντλία με συναρμολογημένο το κέλυφος κατάθλιψης (361 discharge head) με την υπόλοιπη αντλία που θα έχει αφαιρεθεί από το σταθερό εξωτερικό κέλυφος (359 caisson ή shroud). Το συνολικό μήκος της

συναρμολογημένης αντλίας είναι περίπου 6.300mm με πλάτος 1.500mm περίπου (σελ. 73 manual).

Ο Αντισυμβαλλόμενος αφού ασφαλίσει τον άξονα έναντι σχετικής μετακίνησης ως προς τα κελύφη του και αντιστηρίξει σε σταθερή μεταλλική βάση τα κελύφη 1A, 1B και 1C θα παραλάβει την αντλία για να την μεταφέρει στις εγκαταστάσεις του.

Επίσης ο Αντισυμβαλλόμενος θα παραλάβει σε ένα ξυλοκιβώτιο συναρμολογημένο τον ωστικό τριβέα της αντλίας τα ανταλλακτικά του κόμπλερ με τον κινητήρα και το σετ κοχλιών των συνδέσεων του κόμπλερ, του ωστικού τριβέα και της φλάντζας σύνδεσης των κελυφών (259 και 361).

Επίσης ο Αντισυμβαλλόμενος αφού αποξηλώσει τα ψυγεία του κινητήρα και ασφαλίσει το ρότορα ως προς τον στάτη θα παραλάβει για τις εγκαταστάσεις τον κινητήρα και τα ψυγεία του κινητήρα.

2.4.2 Αποσυναρμολόγηση της αντλίας.

Ο Αντισυμβαλλόμενος θα αποκοχλιώσει πλήρως την αντλία εφαρμόζοντας τη διαδικασία αποσυναρμολόγησης του manual από το βήμα 11 έως και το βήμα 21 (σελ. 4.16 έως και 4.19 του manual). Επίσης θα αποσυναρμολόγηση τον ωστικό τριβέα για να αλλάξει τους ένσφαιρους τριβείς. Η αποσυναρμολόγηση των πτερωτών θα γίνει με χρήση επαγωγικής συσκευής.

2.4.3 Επιθεώρηση – επισκευή εξαρτημάτων αντλίας.

2.4.3.1 Γενικές εργασίες.

Ο Αντισυμβαλλόμενος θα καθαρίσει χειρωνακτικά όλα τα εξαρτήματα και εάν απαιτηθεί θα εκτελέσει αμμοβολή με υαλοσφαιρίδια σε πτερωτές, οδηγητικά πτερύγια, άξονες.

Α. ΜΚΕ

Ο Αντισυμβαλλόμενος θα εκτελέσει ΜΚΕ:

α) FPI στους δύο (2) άξονες

β) Διεισδυτικά υγρά στις πτερωτές, οδηγητικά πτερύγια, κελύφη, χιτώνια αξόνων, σφήνες και στις φλάντζες των προστατευτικών σωλήνων.

γ) Σκληρομετρήσεις των δακτυλίων φθοράς της αντλίας, των αξόνων και των προστατευτικών χιτωνίων άξονα.

Β. Σχέδια εξαρτημάτων.

Ο Αντισυμβαλλόμενος θα εκπονήσει κατασκευαστικά σχέδια όλων των κύριων εξαρτημάτων της αντλίας θα καθορίσει τις συναρμογές των συνδεόμενων εξαρτημάτων και θα επιβεβαιώσει τα υλικά κατασκευής του. Συγκεκριμένα θα κατασκευάσει σχέδια 10.Α,10.Β) του ενδιάμεσου κόμπλερ (449), του ωστικού εδράνου της αντλίας (Λεπτομέρεια Α), του θαλάμου μηχανικής στεγανοποίησης της αντλίας (Λεπτομέρεια Β σχεδίου), των οδηγητικών κουζινέτων αντλίας (Λεπτομέρειες G,F και 135D-227C) και των δακτυλίων φθοράς των πτερωτών με τα οδηγητικά πτερύγια (Λεπτομέρειες D Και E).

2.4.3.2. Επιθεώρηση – Επισκευή κύριων εξαρτημάτων αντλίας.

α) Έλεγχος μόνιμης παραμόρφωσης – run out των αξόνων.

Ο Αντισυμβαλλόμενος θα εκτελέσει έλεγχο μόνιμης παραμόρφωσης των αξόνων σύμφωνα με τη διαδικασία της παραγράφου 3.2 (σελ. 4.20) του manual της Flowserve. Σε περίπτωση μικρής παραμόρφωσης θα εκτελέσει διαδικασία θερμικής επαναφοράς του άξονα.

β) Μετρήσεις ακτινικών διακένων στα οδηγητικά έδρανα των αξόνων δηλαδή μεταξύ 9350 – 227C (τέσσερις (4) θέσεις στα κελύφη 1B, 1C, 135C, 227D (μια (1) θέση στη μηχανική στεγανοποίηση), (λεπτομέρεια G σχεδίου) 135A – 227A και 135B – 227B (και οι δύο (2) θέσεις στο κέλυφος 1A) και 10A – 227A (λεπτομέρεια F σχεδίου αντλίας).

Σε περίπτωση που τα ακτινικά διάκενα είναι εκτός ορίων ο Αντισυμβαλλόμενος θα αντικαταστήσει την εσωτερική αντιτριβική επένδυση του κουζινέτου από γραφίτη με διαδικασία αντίστοιχη αυτής του manual (σελ. 4.24 – 4.25). Το αντιτριβικό υλικό θα το προμηθεύσει ο Αντισυμβαλλόμενος .

Σε περίπτωση μεγάλης φθοράς των χιτωνίων προστασίας των αξόνων 135A έως και D θα κατασκευάσει τα χιτώνια από υλικό όπως προδιαγράφεται στο σχέδιο της αντλίας.

γ)Μετρήσεις ακτινικών διακένων δακτυλίου φθοράς (λεπτομέρειες D και E σχεδίου αντλίας).

Σε περίπτωση όπου τα διάκενα είναι εκτός ορίων, ο Αντισυμβαλλόμενος θα αντικαταστήσει τους σταθερούς δακτυλίους φθοράς με διαδικασία που περιγράφεται στο manual της Flowserve (σελ. 4.21 έως και 4.23). υλικό από ανοξείδωτο φερριτικό χάλυβα 410 ή 420, ή θα τους αναγομώσει εφόσον η φθορά τους είναι μικρότερη των 0,5mm.

δ) Λείανση των επιφανειών στεγανοποίησης της κύριας αντλίας. Λείανση των επιφανειών συναρμογής των οδηγητικών πτερυγίων 1B μεταξύ τους και με το οδηγητικό πτερύγιο 1C. Λείανση της επιφάνειας στεγανοποίησης των οδηγητικών πτερυγίων 1C και 1B με τις αντίστοιχες φλάντζες των οδηγητικών σωλήνων 423 A και B αντιστοίχως. Λείανση της φλάντζας σύνδεσης του οδηγητικού πτερυγίου 1A με τον οδηγητικό σωλήνα 423B.

ε) Λείανση των φλαντζών αναρρόφησης-κατάθλιψης και σύνδεσης του εξαρτήματος συλλέκτη κατάθλιψης της αντλίας 361.

στ)Ο Αντισυμβαλλόμενος θα κατασκευάσει σφήνες ή κοχλίες, περικόχλια που τυχόν έχουν αστοχήσει κατά τη διαδικασία αποσυναρμολόγησης.

2.4.4. Συναρμολόγηση της αντλίας.

Ο Αντισυμβαλλόμενος θα συναρμολογήσει πλήρως την αντλία και θα συνδέσει το υδραυλικό μέρος της αντλίας με το κέλυφος κατάθλιψης (361). Η συναρμολόγηση θα γίνει με καινούργια O – ring και παρεμβύσματα που θα παραδώσει η ΔΕΗ. Η ΔΕΗ υποχρεούται να παραδώσει τυχόν στρατηγικά ανταλλακτικά που θα αστοχήσουν και δεν επισκευάζονται.

Ως στρατηγικά ανταλλακτικά θεωρούνται οι πτερωτές (3A, 3B) τα κελύφη (1A, 1B, 1C), οι άξονες (10A, 10B), κέλυφος αναρρόφησης (360).

Ο Αντισυμβαλλόμενος επίσης θα συναρμολογήσει το ωστικό έδρανο της αντλίας με καινούργιους ένσφαιρους τριβής που θα προμηθεύσει.

2.4.5. Συντήρηση Κινητήρα.

Ο Αντισυμβαλλόμενος θα εκτελέσει τις ίδιες ακριβώς μετρήσεις και ελέγχους όπως περιγράφονται στην παράγραφο 2.1.6.1 και 2.1.6.2. Εν συνεχεία θα συναρμολογήσει τον κινητήρα με καινούργιους ένσφαιρους τριβείς που θα παραδώσει η ΔΕΗ.

2.4.6 Παραλαβή εργασιών αντλητικού συγκροτήματος.

Οι δύο αντλίες που θα συντηρήσει ο Αντισυμβαλλόμενος θα τεθούν σε λειτουργία παρουσία του. Οι εργασίες θα παραληφθούν αρχικά εάν όλες οι λειτουργικές ενδείξεις είναι ικανοποιητικές. Θερμοκρασίες εδράνων, διαρροές, ταλαντώσεις αντλίας με ανοικτό το κλαπέ κατάθλιψης σε χαμηλά επίπεδα, θερμοκρασίες τυλιγμάτων κινητήρα σε κανονικά επ[ίπεδα.

Οι εργασίες συντήρησης στην κύρια αντλία στα έδρανα αντλίας και κινητήρα θα είναι υπό εγγύηση ενός έτους. Εάν η αντλία αστοχήσει σε αίτιο που οφείλεται σε κακοτεχνία του Αντισυμβαλλόμενου θα επιβάλλονται τεχνικές ποινικές ρήτρες.

3. Χρονοδιάγραμμα Υπηρεσιών.

Το σύνολο των υπηρεσιών θα εκτελεσθούν συνολικά σε 60 ημερολογιακές ημέρες. Σ ημερομηνία έναρξης υπηρεσιών είναι η ημερομηνία παραλαβής της πρώτης αντλίας από τις εγκαταστάσεις της ΔΕΗ.

Ενδεικτικό χρονοδιάγραμμα εργασιών επισυνάπτεται στο παράρτημα Ε. Για τις εργασίες συντήρησης των επιμέρους αντλιών ισχύουν οι εξής τμηματικές προθεσμίες.

3.1 Αντλία συμπυκνώματος για όλες τις εργασίες που περιγράφονται στην παράγραφο 2.4.1 έως και 2.4.5 12 ημερολογιακές ημέρες.

3.2 Τροφοδοτική αντλία Υ.Π για όλες τις εργασίες που περιγράφονται στις παργράφους 2.1.1 έως και 2.1.6 22 ημερολογιακές ημέρες.

3.3 Τροφοδοτική αντλία Μ.Π. για όλες τις εργασίες που περιγράφονται στις παραγράφους 2.2.1 έως και 2.2.6 10 ημερολογιακές ημέρες.
3.4 Αντλία κυκλοφορίας για όλες τις εργασίες που περιγράφονται στις παραγράφους 2.3.1 έως και 2.3.4 15 ημερολογιακές ημέρες.

ΠΑΡΑΡΤΗΜΑΤΑ:

1. Παράρτημα Α Τεχνικό εγχειρίδιο Flowserve Τροφοδοτικής αντλίας Υ.Π.10.06.50.10894.
2. Παράρτημα Β Τεχνικό εγχειρίδιο Flowserve Τροφοδοτικής αντλίας Μ.Π. 10.06.50.10895.
3. Παράρτημα Γ Τεχνικό εγχειρίδιο Flowserve αντλίας κυκλοφορίας θαλάσσης 10. 07. 50. 10897
4. Παράρτημα Δ Τεχνικό εγχειρίδιο Flowserve αντλίας συμπυκνώματος.10.07.50.10896.
5. Παράρτημα Ε Χρονοδιάγραμμα εργασιών συντήρησης αντλιών μέσης ισχύος.Μονάδας V.

Q Project:

LAVRION V-CCPP
DMKT 11 21 302

Title: Instalation & Operation & Maintenance Manual

(HP BoilerFeed Water Pumps 5 LAC30/40 AP001)

Supplier Document No:	-	Issue: 0
KKS Document No:	5-LAC-GMP-FPD-233	
Purpose of issue: For Revision		Date: 22/12/04

00-Y-X-10302-F3/I Issue 1

Prepared: AF

Reviewed: JJ

Approved: MM

FLOWSERVE®

Pump Division

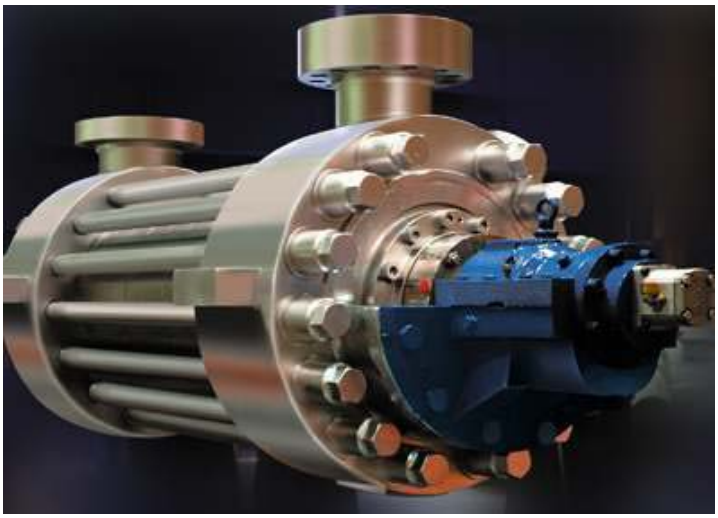

Type:	**HP BOILER FEED WATER**
Size:	**6x14WXH-10**
Serial No:	**M-149448/M-149449**
Customer:	**Empresarios Agrupados**
Project:	**LAVRION V**

USER INSTRUCTIONS: INSTALLATION, OPERATION, MAINTENANCE

User Instructions 10.06.50.10894 rev.0 (11/03) based on MasterWXH24 rev.0

Preeliminar

CONTENTS

During initial start-up of this equipment, it is essential that all of the instructions in this manual be adhered to strictly. It is recommended that the services of a Flowserve service supervisor be obtained to assure trouble-free operation. In some cases, start-up in the presence of a Flowserve service supervisor may be a contractual requirement for continuation of warranty. Check your contract.

To schedule a service supervisor, see back page of this manual.

1 INTRODUCTION AND SAFETY

1.1 General

These instructions must always be kept close to the product's operating location or directly with the product.

Flowserve's products are designed, developed and manufactured with state-of-the-art technologies in modern facilities. The unit is produced with great care and commitment to continuous quality control, utilising sophisticated quality techniques, and safety requirements.

We are committed to continuous quality improvement and being at your service for any further information about the product in its installation and operation or about its support products, repair and diagnostic services.

These instructions are intended to facilitate familiarization with the product and its permitted use. Operating the product in compliance with these instructions is important to help ensure reliability in service and avoid risks. The instructions may not take into account local regulations; ensure such regulations are observed by all, including those installing the product. Always coordinate repair activity with operations personnel, and follow all plant safety requirements and applicable safety and health laws and regulations.

These instructions should be read prior to installing, operating, using and maintaining the equipment in any region worldwide. The equipment must not be put into service until all the conditions relating to safety noted in the instructions, have been met.

1.2 CE marking and approvals

It is a legal requirement that machinery and equipment put into service within certain regions of the world shall conform with the applicable CE Marking Directives covering Machinery and, where applicable, Low Voltage Equipment, Electromagnetic Compatibility (EMC), Pressure Equipment Directive (PED) and Equipment for Potentially Explosive Atmospheres (ATEX).

Where applicable, the Directives and any additional Approvals, cover important safety aspects relating to machinery and equipment and the satisfactory provision of technical documents and safety instructions. Where applicable this document incorporates information relevant to these Directives. To establish approvals and if the product itself is CE marked, check the serial number plate and the Certification. (See Section 9, *Certification*).

1.3 Disclaimer

Information in these User Instructions is believed to be reliable. In spite of all the efforts of Flowserve Corporation to provide sound and all necessary information the content of this manual may appear insufficient and is not guaranteed by Flowserve as to its completeness or accuracy.

Flowserve manufactures products to exacting International Quality Management System Standards as certified and audited by external Quality Assurance organisations. Genuine parts and accessories have been designed, tested and incorporated into the products to help ensure their continued product quality and performance in use. As Flowserve cannot test parts and accessories sourced from other vendors the incorrect incorporation of such parts and accessories may adversely affect the performance and safety features of the products. The failure to properly select, install or use authorised Flowserve parts and accessories is considered to be misuse. Damage or failure caused by misuse is not covered by Flowserve's warranty. In addition, any modification of Flowserve products or removal of original components may impair the safety of these products in their use.

1.4 Copyright

1.5 Duty conditions

This product has been selected to meet the specifications of your purchaser order. The

acknowledgement of these conditions has been sent separately to the Purchaser. A copy should be kept with these instructions.

The product must not be operated beyond the parameters specified for the application. If there is any doubt as to the suitability of the product for the application intended, contact Flowserve for advice, quoting the serial number.

If the conditions of service on your purchase order are going to be changed (for example liquid pumped, temperature or duty) it is requested that you/the user seek our written agreement before start up.

1.6 Safety

1.6.1 Summary of safety markings

These user instructions contain specific safety markings where non-observance of an instruction would cause hazards. The specific safety markings are:

DANGER This symbol indicates electrical safety instructions where non-compliance would affect personal safety.

This symbol indicates safety instructions where non-compliance would affect personal safety.

This symbol indicates safety instructions where non-compliance would affect protection of a safe life environment.

CAUTION This symbol indicates safety instructions where non-compliance would affect the safe operation or protection of the pump or pump unit.

This symbol indicates explosive atmosphere zone marking according to ATEX. It is used in safety instructions where non-compliance in the hazardous area would cause the risk of an explosion.

Note: This sign is not a safety symbol but indicates an important instruction in the assembly process.

1.6.2 Personnel qualification and training

All personnel involved in the operation, installation, inspection and maintenance of the unit must be qualified to carry out the work involved. If the personnel in question do not already possess the necessary knowledge and skill, appropriate training and instruction must be provided. If required the operator may commission the manufacturer/supplier to provide applicable training.

Always coordinate repair activity with operations and health and safety personnel, and follow all plant safety requirements and applicable safety and health laws and regulations.

The instructions in this manual are intended for the guidance of personnel with a general training in operation and maintenance of centrifugal pumps. It is our hope that you will become acquainted with its content as an aid to better pump performance.

1.6.3 Safety action

This is a summary of conditions and actions to prevent injury to personnel and damage to the environment and to equipment. (For products used in potentially explosive atmospheres Section 1.6.4 also applies.)

This manual contains instructions for installation, operation, and maintenance and servicing of your Flowserve Centrifugal Pump. It has been designed to provide safe and reliable service. It is both a pressure vessel, and a rotating machine; therefore, the operators must exercise good judgment and proper safety practices to avoid damage to the equipment and surroundings, and prevent personal injury.

It is recommended that your Safety Department establish a safety program based upon a thorough analysis of industrial hazards. Before installing, operating, or performing maintenance on the pump and associated components described in this manual the safety program must be reviewed by maintenance and operating personnel prior to installing, operating or performing any maintenance on the pump and its components.

It is important that due consideration be given to those hazards which arise from the presence of electrical power, high-pressure, high-temperature liquids, hot oil, toxic liquids or gases, and/or flammable liquids or gases. Proper installation and care of protective guards, shutdown devices, and over-pressure protection equipment shall also be considered an essential part of any safety program.

DANGER Also essential are special precautionary measures to prevent the possibility of applying power to the equipment at any time when maintenance work is in progress. The prevention of rotation due to reverse flow must not be overlooked.

In general, all personnel should be guided by all of the basic rules of safety associated with the equipment and the process.

CAUTION PREVENT EXCESSIVE EXTERNAL PIPE LOAD
Do not use pump as a support for piping. Do not mount expansion joints, unless allowed by Flowserve in writing, so that their force, due to internal pressure, acts on the pump flange.

CAUTION ENSURE CORRECT LUBRICATION
(See Section 5, *Commissioning, startup, operation and shutdown*).

CAUTION START THE PUMP WITH DISCHARGE VALVE PART OPENED (Unless otherwise instructed at a specific point in the user instructions.)
This is recommended to minimize the risk of overloading and damaging the pump motor at full or zero flow. Pumps may be started with the valve further open only on installations where this situation cannot occur. The pump outlet control valve may need to be adjusted to comply with the duty following the run-up process. (See Section 5, *Commissioning, startup, operation and shutdown*).

CAUTION NEVER RUN THE PUMP DRY

CAUTION INLET VALVES TO BE FULLY OPEN WHEN PUMP IS RUNNING AND DURING START UP
Starting up or running the pump at zero flow or below the recommended minimum flow continuously will cause damage to the seal.

CAUTION DO NOT RUN THE PUMP AT ABNORMALLY HIGH OR LOW FLOW RATES
Operating at a flow rate higher than normal or at a flow rate with no back pressure on the pump may overload the motor and cause cavitation. Low flow rates may cause a reduction in pump/bearing life, overheating of the pump, instability and cavitation/ vibration.

CAUTION UNDER NO CIRCUMSTANCES IS THE PUMP TO BE OPERATED WITH ANY SAFETY DEVICES RENDERED INOPERATIVE

DANGER NEVER DO MAINTENANCE WORK WHEN THE UNIT IS CONNECTED TO POWER

HAZARDOUS LIQUIDS
When the pump is handling hazardous liquids care must be taken to avoid exposure to the liquid by appropriate siting of the pump, limiting personnel access and by operator training. Wear protective clothing in the presence of caustic, corrosive, volatile, flammable, or hot liquids. If the liquid is flammable and/or explosive, strict safety procedures must be applied. Do not allow sparking, flames, or hot surfaces in vicinity of the equipment. ***Gland packing must not be used when pumping hazardous liquids.***

DRAIN THE PUMP AND ISOLATE PIPEWORK BEFORE DISMANTLING THE PUMP
The appropriate safety precautions should be taken where the pumped liquids are hazardous.

FLUORO-ELASTOMERS (When fitted.)
When a pump has experienced temperatures over 250 ºC (482 ºF), partial decomposition of fluoro-elastomers (eg Viton) will occur. In this condition these are extremely dangerous and skin contact must be avoided.

HANDLING COMPONENTS
Many precision parts have sharp corners and the wearing of appropriate safety gloves and equipment is required when handling these components. To lift heavy pieces above 25 kg (55 lb.) use a crane appropriate for the mass. Consult current local regulations.

GUARDS MUST NOT BE REMOVED WHILE THE PUMP IS OPERATIONAL
The unit must not be operated unless the guard(s) is bolted in place. Failure to observe this could result in injury to operating personnel.

THERMAL SHOCK
Rapid changes in the temperature of the liquid within the pump can cause thermal shock, which can result in damage or breakage of components and should be avoided.

NEVER APPLY HEAT TO REMOVE IMPELLER
Trapped lubricant or vapour could cause an explosion.

HOT (and cold) PARTS
If hot or freezing components or auxiliary heating supplies can present a danger to operators and persons entering the immediate area action must be taken to avoid accidental contact. If complete protection is not possible, the machine access must be limited to maintenance staff only, with clear visual warnings and indicators to those entering the immediate area. Note: bearing housings must not be insulated and drive motors and bearings may be hot.

If the temperature is greater than 68 °C (175 °F) or below 5 °C (20 °F) in a restricted zone, or exceeds local regulations, action as above shall be taken.

1.6.4 Products used in potentially explosive atmospheres

This section only applies to products used in potentially explosive atmospheres.

Ex Measures are required to:

- Avoid excess temperature
- Prevent build up of explosive mixtures
- Prevent the generation of sparks
- Prevent leakages
- Maintain the pump to avoid hazard

The following instructions for pumps and pump units when installed in potentially explosive atmospheres must be followed to help ensure explosion protection. Both electrical and non-electrical equipment must meet the requirements of European Directive 94/9/EC.

1.6.4.1 Scope of compliance

Ex Use equipment only in the zone for which it is appropriate. Always check that the driver, variable speed coupling (if included), drive coupling assembly, seal and pump equipment are suitably rated and/or certified for the classification of the specific atmosphere in which they are to be installed.

Where Flowserve has supplied only the bare shaft pump, the Ex rating applies only to the pump. The party responsible for assembling the pump set shall select the coupling, driver and any additional equipment, with the necessary CE Certificate/ Declaration of Conformity establishing it is suitable for the area in which it is to be installed.

The output from a variable frequency drive (VFD) can cause additional heating affects in the motor and so, for pumps sets with a VFD, the ATEX Certification for the motor must state that it is covers the situation where electrical supply is from the VFD. This particular requirement still applies even if the VFD is in a safe area.

1.6.4.2 Marking

An example of ATEX equipment marking is shown below. The actual classification of the pump will be engraved on the nameplate.

Ex **II 2 GD c 135 ºC (T4)**

Equipment Group
I = Mining
II = Non-mining

Category
2 or M2 = High level protection
3 = normal level of protection

Gas and/or Dust
G = Gas; D= Dust

c = Constructional safety
(in accordance with prEn13463-5)

Maximum surface temperature (Temperature Class)
(See Section 1.6.4.3.)

1.6.4.3 Avoiding excessive surface temperatures

Ex ENSURE THE EQUIPMENT TEMPERATURE CLASS IS SUITABLE FOR THE HAZARD ZONE

Pumps have a temperature class as stated in the ATEX Ex rating on the nameplate.

The surface temperature on the pump is influenced by the temperature of the liquid handled. The maximum permissible liquid temperature depends on the temperature class and must not exceed the values in the table that follows.

Temperature class to prEN 13463-1	Maximum surface temperature permitted
T6	85 °C (185 °F)
T5	100 °C (212 °F)
T4	135 °C (275 °F)
T3	200 °C (392 °F)
T2	300 °C (572 °F)
T1	450 °C (842 °F)

The responsibility for compliance with the specified maximum liquid temperature is with the plant operator.

If an explosive atmosphere exists during the installation, do not attempt to check the direction of rotation by starting the pump unfilled. Even a short run time may give a high temperature resulting from contact between rotating and stationary components.

Where there is any risk of the pump being run against a closed valve generating high liquid and casing external surface temperatures it is recommended that users fit an external surface temperature protection device.

Avoid mechanical, hydraulic or electrical overload by using motor overload trips, temperature monitor or a power monitor and make routine vibration monitoring checks.

In dirty or dusty environments, regular checks must be made and dirt removed from areas around close clearances, bearing housings and motors.

1.6.4.4 Preventing the build up of explosive mixtures

Ex ENSURE THE PUMP IS PROPERLY FILLED AND VENTED AND DOES NOT RUN DRY

Ensure the pump and relevant suction and discharge pipeline system is totally filled with liquid at all times during the pump operation, so that an explosive atmosphere is prevented. In addition it is essential to make sure that seal chambers, auxiliary shaft seal systems and any heating and cooling systems are properly filled.

If the operation of the system cannot avoid this condition the fitting of an appropriate dry run protection device is recommended (eg liquid detection or a power monitor).

To avoid potential hazards from fugitive emissions of vapour or gas to atmosphere the surrounding area must be well ventilated.

1.6.4.5 Preventing sparks

Ex To prevent a potential hazard from mechanical contact, the coupling guard must be non-sparking and anti-static for Category 2.

To avoid the potential hazard from random induced current generating a spark, the earth contact on the baseplate must be used.

Avoid electrostatic charge: do not rub non-metallic surfaces with a dry cloth; ensure cloth is damp.

The coupling must be selected to comply with 94/9/EC and correct alignment must be maintained.

1.6.4.6 Preventing leakage

Ex The pump must only be used to handle liquids for which it has been approved to have the correct corrosion resistance.

Avoid entrapment of liquid in the pump and associated piping due to closing of suction and discharge valves, which could cause dangerous excessive pressures to occur if there is heat input to the liquid. This can occur if the pump is stationary or running.

Bursting of liquid containing parts due to freezing must be avoided by draining or protecting the pump and ancillary systems.

Where there is the potential hazard of a loss of a seal barrier fluid or external flush, the fluid must be monitored.

If leakage of liquid to atmosphere can result in a hazard, the installation of a liquid detection device is recommended.

1.6.4.7 Maintenance to avoid the hazard

Ex CORRECT MAINTENANCE IS REQUIRED TO AVOID POTENTIAL HAZARDS WHICH GIVE A RISK OF EXPLOSION

The responsibility for compliance with maintenance instructions is with the plant operator.

To avoid potential explosion hazards during maintenance, the tools, cleaning and painting materials used must not give rise to sparking or adversely affect the ambient conditions. Where there is a risk from such tools or materials, maintenance must be conducted in a safe area.

It is recommended that a maintenance plan and schedule is adopted. (See Section 6, *Maintenance.)*

1.7 Warning labels summary

1.8 Specific machine performance

When the contract requirement specifies performance parameters to be incorporated into User Instructions, these are included in Section 10.1. Where performance data has been supplied separately to the purchaser these should be obtained and retained with these User Instructions if required.

1.9 Noise level

When pump noise level exceeds 85 dB_A attention must be given to prevailing Health and Safety Legislation, to limit the exposure of plant operating personnel to the noise. The usual approach is to control exposure time to the noise or to enclose the machine to reduce emitted sound. You may have already specified a limiting noise level when the equipment was ordered, however if no noise requirements were defined then machines above a certain power level will exceed 85 dB_A. In such situations consideration must be given to the fitting of an acoustic enclosure to meet local regulations.

Pump noise level is dependent on a number of factors - the type of motor, the operating capacity, pipework design and acoustic characteristics of the building.

2 TRANSPORT AND STORAGE

2.1 Consignment receipt and unpacking

Immediately after receipt of the equipment it must be checked against the delivery/shipping documents for its completeness and that there has been no damage in transportation. Any shortage and/or damage must be reported immediately to Flowserve Pump Division and must be received in writing within one month of receipt of the equipment. Later claims cannot be accepted.

Check any crate, boxes or wrappings for any accessories or spare parts that may be packed separately with the equipment or attached to side walls of the box or equipment.

Each product has a unique serial number. Check that this number corresponds with that advised and always quote this number in correspondence as well as when ordering spare parts or further accessories.

Your pump was carefully checked at the factory prior to shipment to ensure compliance with the requirements of your order. It is suggested that the pump be inspected upon arrival for damages or signs of rough handling. If any damage is found and/or parts are missing, notify the carrier and nearest Flowserve office immediately. Failure to do so may affect the validity of the warranty.

The condition of the skid and covering is indicative as to the way the shipment was handled. Broken skids, torn coverings, bent hold-down bolts, broken straps, etc., indicate rough handling.

Inspect all covers over pump openings and piping connections. The protective covers on the pump nozzles should be in place and undamaged. If covers or seals for the covers are damaged or loose, they are to be removed, and a visual inspection made of the accessible interior areas for accumulation of foreign materials or water. Install or replace covers and fasten securely.

Inspect the preservative coating on the various parts. If necessary, renew the preservative in areas where it has been rubbed off or scraped to restore the parts to the "as shipped" condition.

Inspect all painted surfaces. If necessary, touch up the areas where paint has been chipped or scraped. Paints and preservatives used are either Flowserve standard or special as required by the contract specification.

The driver end cover, screens, and conduit box should be visually inspected for damage.

Shipping documents should be checked to determine satisfactory arrival of any special tools, loose parts, and/or spare parts (if provided), which are usually preserved and packed in a box attached to the skid.

2.2 Handling

Boxes, crates, pallets or cartons may be unloaded using fork-lift vehicles or slings dependent on their size and construction. Consult current local regulations.

2.3 Lifting

⚠ Careful attention must be paid to lifting the unit. Improper lifting can result in severe injury to personnel and/or damage to the equipment. Only qualified personnel trained in proper methods of lifting equipment should attempt to rig and lift this equipment.

CAUTION To lift pump and baseplate or just baseplate, sling baseplate from all lifting eyes provided. Failure to do this may result in permanent deformation of baseplate.

CAUTION Assure that coupling(s) are disconnected before lifting equipments.

⚠ The suction casing/discharge casing nozzles, and/or any auxiliary equipment or piping, should never be used to support the weight of the pump-driver unit, or any of its parts.

CAUTION Be sure that the lifting slings and/or chains are positioned to take equal strain so that twisting or sudden movement will not occur. Control lines around the pump or driver, are suggested to prevent the unit from swinging or flipping over

⚠ Make sure that any equipment used to lift the pump or any of its components is capable of supporting the total weight encountered (see General Arrangement drawing). A crane must be used for all pump sets in excess of 25 kg (55 lb.). Ensure that all parts are properly rigged before attempting to lift. Consult current local regulations.

⚠ Fully trained personnel must carry out lifting, in accordance with local regulations. The driver and pump weights are recorded on their respective nameplates or massplates.

2.4 Storage

CAUTION If it is necessary to store the pump any length of time before installation, find a location where it will be protected. The nozzle and piping

connection covers provided with the pump should be left in place during storage.

CAUTION The pump driver should not be stored in a damp atmosphere without special protection. Refer to driver instruction manual for storage instructions.

2.4.1 Rust preventive

The internal parts of pump are coated with a thin-film of polar-type rust preventive. This can be removed by flushing with petroleum solvents. External machined surfaces are protected with a durable, drying-type rust preventive. This can be removed with kerosene or other solvent.

External non-machined surfaces are painted. Parts ordered separately are protected with a thin-film of polar-type rust preventive. This can be removed with petroleum solvents.

2.4.2 Extended storage requirements for horizontal pumps

2.4.2.1 General

During extended periods of storage prior to installation and from the time of installation until commercial operation, precautions must be taken to protect the pump from deterioration. The various parts of the pump are protected prior to shipment by applying varying grades of preservative and paint. However, during shipment and handling, the preservatives are subjected to conditions that can cause their removal. Also, during extended periods of time, the preservatives may deteriorate. The following procedures should be followed to prevent deterioration of the pump during the extended storage period. These procedures may also be supplemented by the experience of the persons performing the tasks.

It should be noted, that unless otherwise agreed to, full responsibility and costs associated with the storage and inspection of this equipment rests with the customer.

CAUTION If pump is equipped with a mechanical seal and is stored or has not been run for 1 year or more, the mechanical seal must be removed before start-up and faces re-lapped to guard against the possibility of seal leakage. When reinstalling the seal, new circular joint rings and gaskets must be used.

CAUTION If pump is equipped with a mechanical seal, the seal should be coated with preservative, boxed and stored in a warm dry place.

CAUTION It is recommended that pump be stored completely assembled.

2.4.2.2 Storage area

When selecting a storage area, the following should be taken into consideration:

- deterioration of the equipment will be proportionate to the class/type of storage provided
- expenses involved in restoring the equipment at time of operation will be proportionate to the class/type of storage provided

CAUTION If at all possible, the pump and its component parts should be stored indoors where they will be protected from the elements. If it is not possible, precautions must be taken to protect them from the elements. Regardless of whether storage is inside or outside, the storage area should be vibration-free.

CAUTION All packages marked for inside storage must be stored indoors.

CAUTION The pump and its components when stored outdoors should be protected from dirt, dust, rain, snow or other unfavourable conditions by coverings of heavy gauge plastic sheets, canvas, waterproof burlap or other suitable coverings.

CAUTION All equipment must be placed upon skids or blocks to prevent contact with the ground and surface contaminants. Equipment must be adequately supported to prevent distortion and bending.

CAUTION Fill the bearing housings with the recommended oil to the bottom of the shaft. Flowserve does not recommend rotating the shaft on a periodic basis.

2.4.2.3 Storage preferred (dry)

2.4.2.3.1 Customer Inspection and Maintenance

The stored equipment is to be placed on a periodic schedule by the customer.

The responsibility for setting up an inspection and maintenance schedule rests with the customer and will be dependent upon the class/type of storage provided and the storage conditions. It would be expected that initially inspection would occur weekly, then, depending upon the inspection reports being favourable or unfavourable, inspection would continue weekly, monthly, or quarterly, as may be determined. Inspection reports must be kept on file.

Each inspection should consist of a general surface inspection:

a) Pump and pump rotor supports are firmly in place.

b) Pump covers over openings are firmly in place.

c) Pump covering, plastic or tarps, is firmly in place. Any holes or tears must be repaired to prevent entrance of dirt or water.

d) Pump covers are periodically removed from openings and interior accessible areas inspected. If moisture has accumulated or surface rusting occurred, dry out and clean or re-coat with preservative.

e) Loosen suction casing/discharge casing drain plugs or flanges to allow seepage of any accumulated moisture.

f) If rusting occurs on exterior surfaces, clean and repaint or re-coat with preservative.

g) Periodically remove bearing covers and inspect for accumulation of moisture, rust and foreign material. As required, clean bearings and bearing housings and re-preserve. Install bearing cover and secure it to assure maximum protection. Bearings removed for storage should be coated with preservative wrapped in oil/wax paper and stored in a warm dry area.

h) Check individually wrapped parts for signs of deterioration. If necessary, renew preservative and wrapping.

2.4.2.3.2 Six Months Prior To Installation
Six months prior to the scheduled installation date, a Flowserve representative is to be employed to conduct an inspection. All costs involved during inspection, dismantling, restoration, replacement of parts, and re-assembly will be the responsibility of the customer. All necessary labor, tools, and cranes will be supplied by the customer. This inspection will include (not necessarily in its entirety) but not be limited to, the following:

a) An inspection of all periodic inspection records as kept on file by the customer, and all inspection reports that have been compiled during the storage period.

b) An inspection of the storage area to determine the "as stored" condition of the equipment prior to any protection covers being removed.

c) An inspection of the equipment with protection covers and flange covers removed.

d) Depending upon the length of time the equipment was stored, the class/type of storage provided, (i.e.: indoor, heated, unheated, ground floor, concrete floor; outdoors, under roof, no roof, waterproof covering, on concrete, on ground) and as a result of the inspection of a, b and c above the Flowserve representative may require a partial or complete dismantling of the equipment.

e) Dismantling may necessitate restoration of painted or preserved surfaces, and/or replacement of gaskets, circular ring joints, packing and/or mechanical seal and bearings.

Upon completion of the inspection, the Flowserve representative shall submit a report to the customer, and to the Manager of Customer Service (Flowserve), stating in detail the results of the inspection.

2.4.2.3.3 One Month Prior To Installation
One month prior to installation of the equipment, a Flowserve representative is to be employed to conduct a final inspection. This final inspection will be made to assure that the requirements of the six month inspection report were satisfactorily completed and that the equipment is ready for installation.

Upon completion of this inspection, the Flowserve representative shall submit a final report to the customer, and to the Manager of Customer Service (Flowserve) advising the results of the final inspection.

2.4.2.4 Storage non-preferred (wet)
It is not recommended that the rotor be subjected to extended periods of submergence or wetting prior to start-up. However, it is recognized that in some cases, a long period of time may lapse from installation until commercial operation.

If the pump must be stored after being installed and wetted, the following inspection and maintenance procedures should be performed:

a) Isolate pump - tag (seal) all valves.

b) Preserve the pump internals:

- Corrosive Pumpage (such as water). Fill the pump as much as possible with a suitable corrosion inhibitor and, if required, seal off any openings. Flowserve recommends the use of Protecsol 649L which is a water soluble, vapour corrosion inhibitor. It is ideally suited for wet or dry corrosion protection of equipment during short term / long term lay-up periods of up to 24 months. Protecsol 649L corrosion inhibitor does not need to be removed prior to placing equipment back into service. For detailed instructions, inquires, and to purchase this product call: Ashland Specialty Chemical Company, Drew Industrial Division, Phone # 1-800-526-1015 and request Maintenance Chemical Marketing.
- Non-Corrosive Pumpage (such as oil). Fill pump with pumpage to the highest level possible. Periodically open drain connections to drain off

any moisture that may have accumulated. Refill to highest level possible. Drain and inspect pump prior to start-up.

2.4.3 Storage requirements for drivers

Generally storage must be indoors and dry. See the specific manufacturer's storage requirement.

2.4.4 Storage requirements for lube system

See the specific manufacturer's storage requirement.

2.4.5 Storage requirements for other equipments

See the specific manufacturer's storage requirement.

2.5 Recycling and end of product life

At the end of the service life of the product or its parts, the relevant materials and parts should be recycled or disposed of using an environmentally acceptable method and in accordance with local regulations. If the product contains substances that are harmful to the environment, these should be removed and disposed of in accordance with current local regulations. This also includes the liquids and/or gases that may be used in the "seal system" or other utilities.

Make sure that hazardous substances are disposed of safely and that the correct personal protective equipment is used. The safety specifications must be in accordance with the current local regulations at all times.

3 PUMP DESCRIPTION

3.1 Configurations

The WXH type pump is a multistage, high pressure ring section design pump with a balance disc type construction. It is available in a wide range of sizes and stages to accommodate a wide spectrum of needs.

WXH pumps are available in the following configurations:

- Single or double suction first stage impeller
- With or without intermediate stage take-off connection
- Different sizes
- Different bearings configurations

3.2 Name nomenclature

The pump size will be engraved on the nameplate typically as below:

6X14WXH-10

Nominal discharge flange diameter

Nominal impeller diameter

Commercial pump type

Number of stages

The typical nomenclature above is the general guide to the WXH configuration description. Identify the actual pump size and serial number from the pump nameplate. Check that this agrees with the applicable certification provided.

3.3 Design of major parts

Flowserve Pump design incorporates hydraulic and mechanical improvements resulting from years of experience in building this class of equipment.

These units are dependable, efficient and durable, and include outstanding features such as COMPLETE AXIAL and RADIAL BALANCE. Full protection is provided against corrosion, erosion and cutting. Throughout this manual, numbers (in parentheses) following part names--such as "shaft [2100]" indicate reference to the Sectional Assembly drawing and parts list included in the manual.

The pump is of the double suction type, i.e., all impellers face in one direction, except the first stage impeller which is a double suction impeller. Liquid enters through two suction openings in the first stage impeller (each one at one side of the suction head), passes through the first stage impeller, and through the other stages impellers in succession and leaves through a discharge opening at the opposite end.

The first stage impeller is enclosed by the suction casing [1130]. The suction casing directs the flow of liquid from the suction nozzle to the first stage impeller.

Surrounding each succeeding impeller is a stage casing [1150.1/2] which contains the fluid passages. Diffusion vanes efficiently convert a portion of the velocity energy of the liquid leaving the impeller into pressure energy. This process is repeated through each successive stage, each adding its increment of head or pressure. Liquid leaving the last stage diffuser passes into an annular space in the discharge casing and out the discharge nozzle. Diffusers [1410.1/2/3] are used in preference to volutes because their hydraulic construction provides flexibility, efficiency and complete elimination of radial thrust at all conditions of operation.

3.3.1 Suction casing

The cast steel suction casing [1130] closes the suction end of the pump and houses the suction passage and flange. It also serves as the mounting for the radial bearing housing, includes machining for stuffing box sealing and is drilled for insertion of the rods. The pump mounting feet are also machined into the sides of the suction casing.

3.3.2 Casing

The casing consists of a series of stage casings [1150.1/2], and diffusers [1410.1/2/3], incorporating the hydraulic passages and impeller inlet chambers. The casing assembly is held in alignment by interlocking joints of close tolerances and held together between the suction and discharge casings with tie bolts and circular joint rings between each stage to seal the pump from leaking to atmosphere. This construction simplifies assembling and dismantling operations. Contact between the stage casings and diffuser is maintained by the clamping force of the tie bolts.
The stage casing diffuser design assures absolute concentricity with all diametral fits machined at one setting.

3.3.3 Shaft

The shaft [2100] furnished is machined from the highest quality material selected with consideration to the service for which the pump is to be applied. The shaft is of sufficient diameter to assure low torsional stresses and is accurately ground and polished throughout its entire length.

3.3.4 Sealing device

Cartridge style mechanical seals [4200] are used at both ends of the pump where the shaft protrudes through the suction casing [1130] and stuffing box

housing [4110]. Each mechanical seal has a stationary ring against which a spring-loaded rotating ring seals, to prevent leakage from the pump.

3.3.5 Impellers and wear rings

Individually mounted impellers [2200.1/2/3], of one piece construction, are keyed to the shaft with keyways on alternate sides of the shaft. The 1st stage impeller is positioned against a shoulder on the shaft with the remaining impellers stacked hub to hub. During operation, force is transmitted through the impeller hub into the shaft at the shaft shoulder. Renewable casing wear rings [1500.1/2/3/4] are provided to control leakage past the impeller hubs or the renewable impeller wear rings (if supplied).

3.3.6 Discharge casing

A cast steel discharge casing [1140] closes the discharge end of the casing and serves as a mounting surface for the outboard stuffing box housing and thrust bearing housing, and includes drilling for insertion of the tie bolts. The outboard feet are also machined into the sides of the discharge casing.

3.3.7 Balancing device

Flowserve ring section pumps are maintained in complete axial balance during operation by a self compensating flanged balance disc [6210], and counter balance disc [6220]. The normal axial thrust developed by the rotor toward the suction end of the pump is effectively counteracted by the balancing device assembly located at the discharge end. The front end of the balance disc is exposed to full discharge pressure. The chamber at the back of the balance disc is piped to suction pressure, placing this pressure on the outer face. A thrust is therefore developed which is equal in magnitude and opposite in direction to the normal thrust of the pump impellers toward the suction.

3.3.8 Radial bearings

The bearing bushes [3300] are carbon steel backed, babbitt lined, sleeve-type insert bearings. The renewable bearing inserts are mounted in bearing bodies [3200.1/2] which are kept from rotating by means of stop pins.

3.3.9 Thrust bearing

The thrust bearing is of the equalizing type having six shoes on each side of the thrust bearing plate and is consequently capable of transmitting the thrust load in either direction. Thrust is transmitted through the thrust bearing plate [3610] to the shoes, by the shoes to the shoe supporting elements, and thence to the bearing housing and the foundation.

3.3.10 Pump pedestals

The pump should not be removed from the pedestal unless it is going to be disassembled. The pump pedestal help to keep the suction and discharge nozzles aligned while torquing the tie bolts.

3.4 Performance and operating limits

This product has been selected to meet the specifications of your purchase order see Section 1.5.

4 INSTALLATION

Note: It is strongly recommended the installation and commissioning of this equipment be conducted in accordance with API Recommended Practices 686/PIP REIE 686 First Edition. Refer to API 610 Eighth Edition Appendix 'L' for baseplate grouting requirements.

Copies of API Recommended 'Practices 686/PIP REIE 686 First Edition may be obtained from America Petroleum Institute, 1220 L Street, N. W., Washington, D. C. 20005. Phone #: (202) 682 8000.

The following ASTM Specifications are furnished as references for test methods used in conjunction with installation of grouting materials and should be used to obtain proper results.

- ASTM C 78-84: Test Method for Flexural Strength for Concrete
- ASTM C 109-90: Test Method for Compressive Strength of Hydraulic Cement Mortars (Modified)
- ASTM C 469 87a: Test Method for Static Modulus of Elasticity and Poisson's Ratio of Concrete in compression
- ASTM C 496-90: Test Method for Splitting Tensile Strength of Cylindrical Concrete Specimens
- ASTM C 531-85: Test Method for Linear Shrinkage and Coefficient of Thermal Expansion of Chemical Resistant Grouts and Monolithic Surfacings (Modified)
- ASTM C 666-90: Test Method for Resistance of Concrete to Rapid Freezing and Thawing
- ASTM C 939-87: Test Method for Flow of Grout for Preplaced Aggregate Concrete (Flow Cone Method)
- ASTM C 942-86: Test Method for Compressive Strength of Grouts for Preplaced Aggregate Concrete in the Laboratory
- ASTM C 1090-88: Test Method for Measuring Changes in Height of Cylindrical Specimens from Hydrau-lic Cement Grout
- ASTM C 1107-91: Standard Specification for Packaged Hydraulic Cement Grout (Non shrink)
- (CRD C 621-92) ACI 351 24 Hour Test: Grouting for Support of Equipment and Machinery. MBT Test Method for Grout Performance

Minimum requirements for epoxy grout (typical properties at 23 °C (73 °F)

- ASTM D-635: Fire Resistant
- ASTM C-579B: Minimum Compressive Strength 82.7 N/mm^2 (12000 psi)
- ASTM C-827: Height Change @ 38 °C (90 °F). Positive Effective Bearing Area 95%
- ASTM C-1181: Maximum Creep in 1 Year 1.6X10^{-3} mm/mm (in./in.) at 60 ºC (140 °F), 2.76 N/mm^2 (400 psi)
- ASTM C-307. Minimum Tensile Strength 12.4 N/mm^2 (1800 psi)
- ASTM C-580. Minimum Flexural Strength 26.2 N/mm^2 (3800 psi)
- ASTM C-580. Minimum Flexural Secant Modulus 1.2X10^4 N/mm^2 (1.8X10^6 psi)
- ASTM C-531. Maximum Coefficient of Expansion 17X10^6 mm/mm/ºC (in/in/°F). Maximum Peak Exotherm 1000 gm insulated 35 °C (95 °F). Full Aggregate Must Be Used

Damage resulting from neglect and disregard of the instructions and precautions included in this instruction manual will be the sole responsibility of the purchaser.

CAUTION Poor location and use of inadequate standards for the preparation of the foundation adversely affect pump life. A good foundation is particularly important since it can be a primary factor in preventing vibration, a major cause of wear and failure of the pump.

Ex Equipment operated in hazardous locations must comply with the relevant explosion protection regulations. See Section 1.6.4, *Products used in potentially explosive atmospheres*.

4.1 Location

When selecting pump location, allow adequate space for access, ventilation, operation, maintenance and inspection of the unit. Head room must be an important consideration for maintenance of the unit; lifts will have to be made in order to remove the pump with pump pedestal. An overhead rail or crane, in line with the pump centreline is most desirable. Important data and dimensions can be obtained from the General Arrangement drawing included in this User Instructions book.

4.2 Prior to installation / operation

Please read all notes on General Arrangement drawing.

4.3 Foundation

Note: The following information regarding foundation is only offered as a general guideline to the customer. Flowserve Corp. requires that all foundations be designed/installed in accordance with specifications set forth in Chapter 4 'Foundations' from API Recommended Practices 686/PIP REIE 686, First Edition.

CAUTION The design of foundations is not the responsibility of Flowserve Corp. It is therefore recommended that the customer consult a competent specialist skilled in the field of foundations, to insure proper design and installation of the foundation.

CAUTION There are many methods of installing pump units to their foundations. The correct method depends on the size of the pump unit, its location and noise vibration limitations. Non-compliance with the provision of correct foundation and installation may lead to failure of the pump and, as such, would be outside the terms of the warranty. Ensure the following are met.

The foundation should be sufficiently rigid and substantial, to prevent any pump vibration and to permanently support the equipment at all points.

The most satisfactory foundations are made of reinforced concrete. These should be poured well in advance of the installation to allow proper time for drying and curing.

The foundation mass ratio should be three to five times the weight of the equipment.

The General Arrangement drawing will furnish anchor bolt locations, size of bolts, etc.

The sketch illustrates a recommended foundation bolt arrangement. Notice the large washer with lugs at the bottom. It should be welded to the bolt and pipe sleeve to prevent turning.

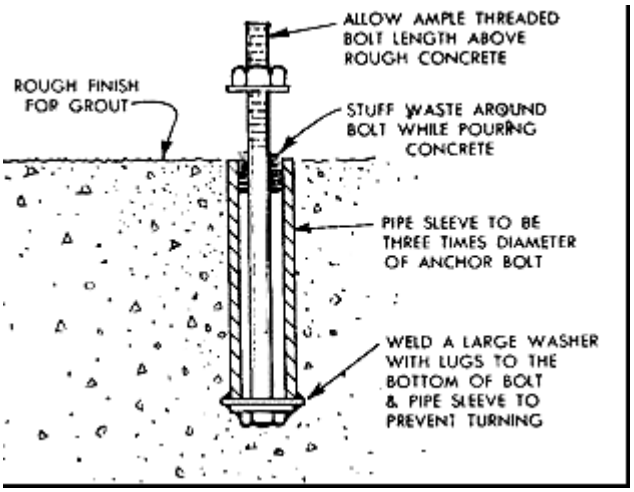

A rough-finish top surface is best when applying grout. It must be clean and dry before pouring any grout.

Note: Recommended ambient temperature should be above 18 ºC (65 °F) during grouting.

4.4 Arrangement of foundation bolt in foundation

Foundation bolts should be located using dimensions as shown on General Arrangement drawing.

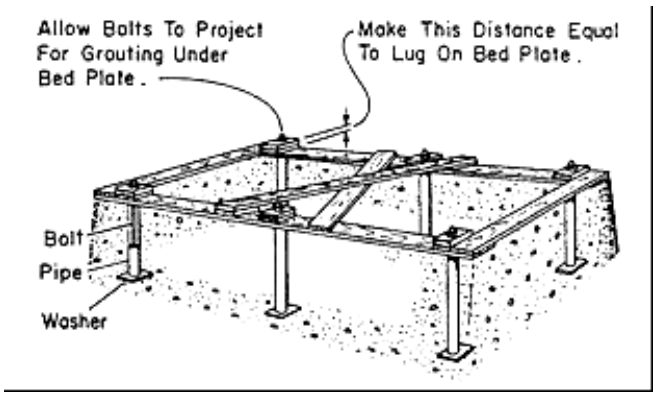

The sketch illustrates a template for hanging foundation bolts.

4.5 Bedplate installation

4.5.1 General considerations

The foundation must be sufficiently rigid and must support the unit at all points. Foundation must be designed such that structural resonance is outside of the operating speed range of the pump and motor.

Before putting the unit on the foundation, thoroughly clean the top of the foundation. Break off any loose pieces of cement and roughen the top with a chisel to afford a good hold for grout. Use epoxy type grout.

Refer to General Arrangement drawing for additional bedplate information.

4.5.2 Levelling the bedplate

Note: The following information regarding levelling of equipment is only offered as a general guideline to the customer. Flowserve Corp. requires that all levelling of equipment be performed in accordance with specifications set forth in Chapter 5 'Mounting Plate Grouting' from API Recommended Practices 686/PIP REIE 686, First Edition.

Make sure that any equipment used to lift the motor or any other components is capable of supporting the total weight encountered. Make sure that all parts are properly rigged before attempting to lift.

CAUTION Place the unit in position on foundation. When lifting baseplate, sling from all lifting eyes provided. Failure to do this may result in permanent deformation of baseplate.

CAUTION Motor (and variable speed coupling, if supplied) must be removed before lifting baseplate.

Establish the equipment elevations as shown on the General Arrangement drawing. The equipment train must be levelled prior to grouting to verify final alignment can be achieved.

For shims and/or fasteners refer to General Arrangement drawing & Notes.

The following tool(s) will be required for use in this procedure:

- A precision (machinist) level, graduated in 0.05 mm/m (or 0.0005 in./ft.) increments.

Note: Do not grout baseplate prior to levelling the bedplate.

CAUTION Baseplate must not be lifted with motor (and variable speed coupling, if supplied) mounted.

CAUTION When lifting, sling bedplate from all lifting eyes provided. Failure to do this may result in permanent deformation of baseplate.

Begin levelling at high end of baseplate. Level crosswise on this end till pads are within 0.16 mm/m (0.002 in./ft.). Adjust the baseplate to achieve this degree of level by using built in levelling screws.

Proceed to the rest of the pads repeating the procedure above until the baseplate is level in the crosswise direction. If possible, span the pads with a flat bar and check level across pads.

Level both sides of the baseplate in the lengthwise direction to 0.16 mm/m (0.002 in./ft.) to a maximum of 0.25 mm (0.010 in.) over the entire length of the baseplate.

Tighten the anchor bolts and check the level in both crosswise and lengthwise direction. If tightening disturbs the level, adjust levelling screws till levelness is achieved when anchor bolts are tight.

If the pads cannot be levelled within this designated tolerance, please contact your Flowserve representative for appropriate corrective action.

Mount all equipment, if necessary, and proceed to alignment.

4.6 Equipment mounting

4.6.1 General considerations

Pump is mounted on bedplate at the factory and shipped to the site on bedplate.

Note: Refer to General Arrangement drawing for additional information on bolting pump to bedplate and bedplate installation.

The driver may already be mounted on the baseplate depending upon the contractual requirements. Refer to the driver (and variable speed coupling, if supplied) IOM and General Arrangement drawing for additional information.

4.6.2 Soft foot check

The pump feet shall be checked for soft feet. The hold down bolts should be torqued to the values listed in the torque tables. Then one foot shall be loosened with an indicator contacting the top of the foot. The maximum allowable foot movement shall be 0.25 mm (0.010 in.). Re-tighten this foot and proceed to the next. If any foot has more than the maximum allowable soft foot movement, please contact your Flowserve representative for appropriate corrective action.

4.7 Vertical thermal rise of equipment

CAUTION The pump and motor (and variable speed coupling, if included) will normally have to be aligned at ambient temperature and should be corrected to allow for thermal expansion at operating temperature.

A hot check can only be made after the unit has been in operation a sufficient length of time to assume its NORMAL operating temperature and conditions. If the unit has been properly cold set, the coupling hub misalignment will be within 0.050 mm total indicator run-out (0.002 in. TIR) and coupling hub faces are parallel within 0.025 mm (0.001 in.) when in operation. If not, make adjustments.

Note: Refer to "RIM AND FACE DATA SHEET".

Note: It is recommended, the completed "RIM AND FACE DATA SHEET" be retained as part of your permanent maintenance file.

Do not attempt any maintenance, inspection, repair or cleaning in the vicinity of rotating equipment. Such action could result in injury to operating personnel.

Before attempting any inspection or repair on the pump, the driver controls must be in the “off” position, locked and tagged to prevent restarting equipment and injury to personnel performing service on the pump.

4.8 Initial shaft/coupling alignment

4.8.1 General considerations

Note: The following information regarding shaft alignment is only offered as a general guideline to the customer. Flowserve Corp. requires that all shaft alignment be performed in accordance with specifications set forth in Chapter 7 'Shaft Alignment' from API Recommended Practices 686/PIP REIE 686, First Edition.

CAUTION Shaft alignment must be correct for successful operation. Rapid wear, noise, vibration and actual damage to the equipment may be caused by shaft misalignment. The shafts must be aligned within the limits given within this section.

Note: Adjustment to correct the alignment in one direction may alter the alignment in another direction. Always check in all directions after making any adjustment.

Note: If variable speed coupling is included, it is necessary to align the pump and variable speed coupling shafts, and the variable speed coupling and motor shafts.

Coupled equipment must be aligned to minimize unnecessary stresses in shafts, bearings and coupling. Flexible couplings will not compensate for appreciable misalignment. Foundation settling, thermal expansion or nozzle loads resulting in foundation deflection and vibration during operation may require the full coupling misalignment capability.

4.8.2 Types of misalignment

There are two types of shaft misalignment: Angular and Offset. Therefore, two sets of measurements and corrections are required. Both types of misalignment can occur in horizontal and vertical planes and are present in most applications.

4.8.2.1 Angular misalignment

In angular misalignment, the centrelines of the shafts intersect, but are not on the same axis.

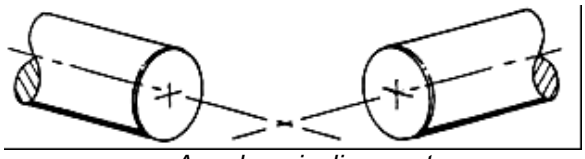

Angular misalignment

4.8.2.2 Offset misalignment

In offset misalignment, the shaft centrelines are parallel but do not intersect.

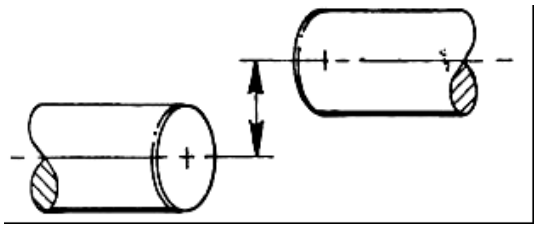

Offset misalignment

4.8.2.3 Combination of angular and offset misalignment

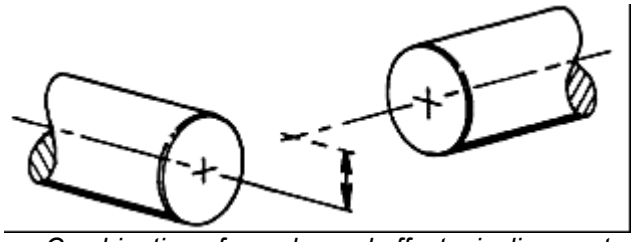

Combination of angular and offset misalignment

4.8.3 Alignment

For shim & alignment procedures, refer to General Arrangement drawing notes.

DANGER Ensure pump and driver are isolated electrically and the half couplings are disconnected.

CAUTION The alignment MUST be checked.

4.8.3.1 Measure gap

The first step in shaft/coupling alignment is to bring the pump and driver shafts into their proper axial position. The shaft gap, or distance between coupling hubs, must be in accordance with the certified General Arrangement drawing and must be measured with pump and driver shafts in the centre of their axial end float. Motor with sleeve bearings is to be aligned with rotor at magnetic centre.

Note: Refer to driver instructions.

CAUTION If the driver does not run in its magnetic centre the resultant additional axial force may overload the pump thrust bearing.

Move driver to insure proper gap distance.

4.8.3.2 Before alignment

Note: It is recommended that the pump hold down bolting be torqued and the pump be fixed before taking any alignment measurements. This makes the driver the movable machine. In certain cases, however, it may be impractical to move the driver; therefore, the pump may have to be moved. When this case exists, the pump should not be fixed until after final alignment. (See Section 4.11, *Doweling pump and driver*).

CAUTION If pump shaft must be rotated bearings are to be pre-lubed before aligning starts. Refer to Section 5.2.1, *Lubrication*.

Align pump and driver using the rim and face method, rotating driver only. Align equipment such that coupling hub rims are aligned within 0.050 mm TIR (0.002 in. TIR), and coupling hub faces are parallel within 0.025 mm (0.001 in.).

Note: Refer to "RIM AND FACE DATA SHEET".

Laser alignment, double reverse (dial) alignment, or reverse rim (dial) alignment methods can be used to check alignment when site requirements dictate.

4.8.3.3 Horizontal move

The dial indicators shown below are required to accurately measure the move in the horizontal direction. Move the driver by bumping with soft hammer/mallet or using the alignment screws (if provided).

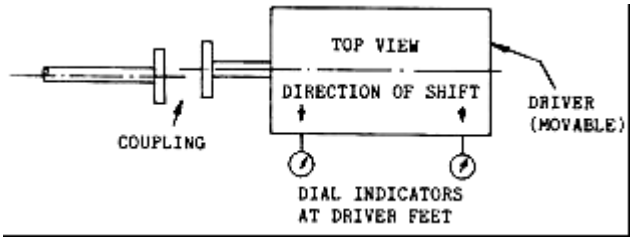

4.8.3.4 Vertical move

Before moving the equipment vertically, it is important that the vertical thermal expansion be taken into consideration. Refer to General Arrangement Notes and/or Driver Instructions for recommended cold vertical setting.

The stainless steel shims between the equipment feet and mounting surface should be clean and dry. This is especially critical for pumps that have been in service for some time and need to be realigned. Water, dirt and rust may change the height of the shim pack over a period of time. Shims should be made large enough to support the weight of the equipment on its mounting foot. Do not use many thin shims, as this may result in a spongy mounting.

Move the equipment vertically by adding or removing the calculated thickness of shims. Torque equipment hold-down bolting to required values.

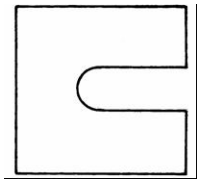

Recommended shim design

4.9 Checking coupling alignment

The angular and offset coupling alignment must now be rechecked:

- Coupling faces are to be parallel within 0.025 mm (0.001 in.)
- Coupling outside diameters are to be aligned within 0.050 mm TIR (0.002 in. TIR)

Use a dial indicator as shown below to check both parallel and angular alignment.

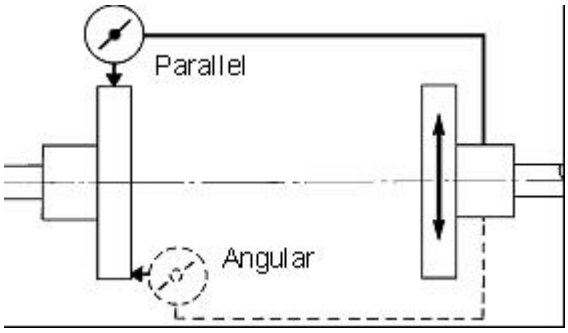

"Bump" the motor and check motor rotation.

4.10 Assembling coupling

Assemble the coupling(s) per the manufacturer's instructions.

Install coupling guard(s).

4.11 Doweling pump and driver

Note: For doweling information, refer to General Arrangement drawing notes.

Pumps handling liquids at temperatures greater than 90 ºC (200 °F) are designed to permit expansion away from the drive or coupling end. This is accomplished by means of a pin and key block located beneath the suction and discharge heads respectively. The pin fixes the suction end while the key allows for expansion in the axial direction with temperature gradients.

The pin and key blocks are not welded at the factory. After installation and final alignment in the facility, customer must weld pin and key block to cross members with a 13 mm (0.5 in.) fillet weld all around.

Note: Refer to the IO&M manual of the motor (and variable speed coupling, if included) for information about doweling.

RIM AND FACE DATA SHEET

Project Number_____

Plant: _____
Movable: Item: _____
Type: _____
Fixed: Item: _____
Type: _____

Unit: _____
Manufacturer: _____
Serial No.: _____
Manufacturer: _____
Serial No.: _____

Indicator bar sag: _____ Indicator bar number: _____

RIM READINGS

Set proper face readings before taking rim readings

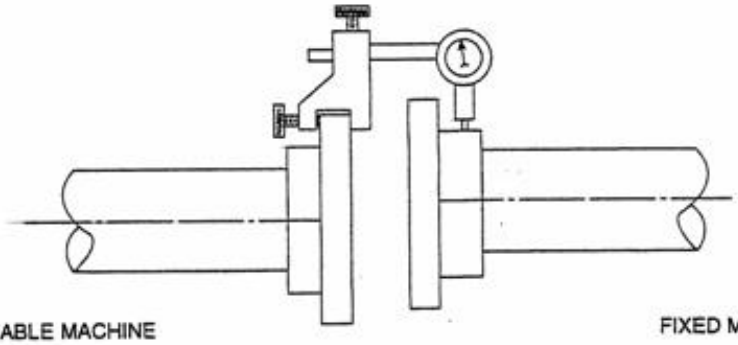

MOVABLE MACHINE FIXED MACHINE

Swept diameter × _____

D = Axial distance between shaft hubs × _____

INDICATOR READINGS: "Left" and "Right" indicator readings are determined by looking from the back of the movable machine toward the fixed machine.

THEORETICAL and Tolerance	ACTUAL (PIPE OFF) Corrected for Axial Float	ACTUAL (PIPE ON) Corrected for Axial Float
Top _____	Top _____	Top _____
Left _____ Right _____	Left _____ Right _____	Left _____ Right _____
Bottom _____	Bottom _____	Bottom _____

PREPARED BY _____ DATE _____

RIM AND FACE DATA SHEET (CONTINUED)

Project Number_____

Movable: Item: _____
Type: _____
Fixed: Item: _____
Type: _____

Indicator bar sag: _____ Indicator bar number: _____

FACE READINGS

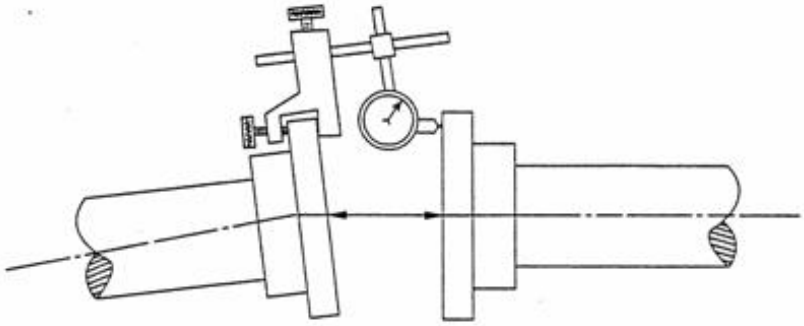

MOVABLE MACHINE FIXED MACHINE

INDICATOR READINGS: "Left" and "Right" indicator readings are determined by looking from the back of the movable machine toward the fixed machine.

THEORETICAL and Tolerance	ACTUAL (PIPE OFF) Corrected for Bar Sag	ACTUAL (PIPE ON) Corrected for Bar Sag
Top ____	Top ____	Top ____
Left ____ Right ____	Left ____ Right ____	Left ____ Right ____
Bottom ____	Bottom ____	Bottom ____

Shims Tabulation

Fixed IB Left	_____	Move. IB Left	_____
Fixed IB Right	_____	Move. IB Right	_____
Fixed OB Left	_____	Move. OB Left	_____
Fixed OB Right	_____	Move. OB Right	_____

Note: All shims are recorded looking to the fixed machine from the movable machine.

WITNESSED BY _____ DATE _____

4.12 Grouting

Note: The following information regarding grouting is only offered as a general guideline to the customer. Flowserve Corp. requires that all grouting be installed in accordance with specifications set forth in Chapter 5 'Mounting Plate Grouting' from API Recommended Practices 686/PIP REIE 686, First Edition.

It is recommended that the customer consults a competent specialist skilled in the field of grouting, to insure proper installation of all grouting.

Build a dam around the foundation before pouring grout. It is a matter of personal preference whether the levelling wedges under the bedplate should be removed after grouting. If you do want to remove the wedges, carefully mark their locations before pouring grout.

Use of a quality, high strength, non-shrink epoxy grout is recommended.

Alternatively, a layered sandwich of epoxy grout and cemetitious grout can be used. The first layer is an epoxy grout that ends 25 mm (1 in.) above bottom of the lower baseplate flanges. The second level is a cementitious non-shrink grout poured to approximately 50 mm (2 in.) below the top of the baseplate flanges or topplate. The last layer is another epoxy grout to the top of the baseplate flanges or topplate.

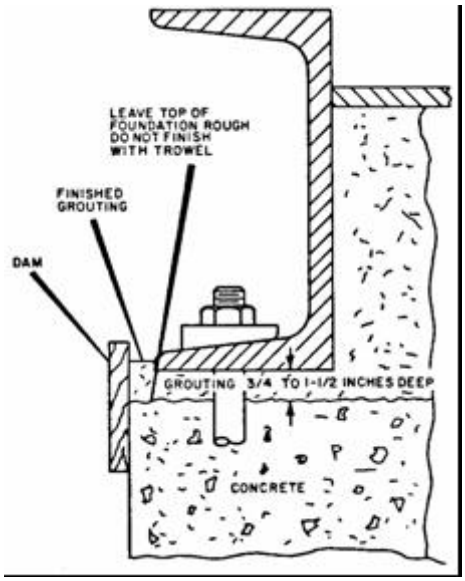

Spaces are provided in the bedplate to permit pouring the grout and stirring. Fill under the bedplate completely, stirring to assure proper distribution of the grout. Check to see that the grout flows under the edges of all the ribs.

Note: Do not vibrate bedplate when grouting; make sure all areas indicated on General Arrangement drawing are thoroughly puddled to prevent any resonant problems.

When the grout is thoroughly hardened, remove the dam and wedges, if desired, filling in the holes they leave with grout.

4.13 Suction strainer

CAUTION In a new installation, great care should be taken to prevent dirt, scale and welding beads from entering the pump. Even when piping has been previously flushed, it is difficult to break loose the oxides and mill scale which will become free when the pipe heats and cools several times. Numerous close running clearances are vulnerable to abrasive matter present in new piping. Foreign material may be large enough, or of sufficient volume, to jam a pump, with probable damage to both pump and drive equipment. Smaller material passing through the pump can cause rapid pump wear and premature pump failure.

The pump is provided with the expectation that it will be pumping clean liquids (unless otherwise stated in the order and addressed in the proposal). If a suction strainer is provided it is not intended to be used for cleaning the entire boiler piping system.

Flowserve ring section pumps are normally provided with running clearances ranging typically from 0.30 mm (0.012 in.) to 0.41 mm (0.016 in.). Particles of this size will normally pass through the pump without causing damage, providing the concentrations are minor.

The possibility exists that, on shutdown of the pump, such particles can become trapped in the close running clearances during coastdown, causing binding. Flowserve cannot recommend a procedure that will totally prevent such binding; however, we strongly suggest that systems be cleaned and thoroughly flushed prior to connecting the pump to the piping to minimize particles entering the pump. Starting and stopping of the pump should be MINIMIZED as pumps are most susceptible to dirt during starts and stops.

In the event that binding on coastdown occurs, it is unlikely that the binding can be remedied by hand rolling the rotor, and partial disassembly may be required to clean the affected parts. It should be noted that increased particle concentrations increase the probability of coastdown binding and seizures, as well as erosion damage.

CAUTION Excessive force used to try to free a bound rotor may cause damage beyond minor cleanup and repair of rotor parts.

Generally, a pump should not be installed without strainer protection. The suction system should be thoroughly flushed before installing the suction strainer and making up the suction piping to the pump. The strainer should be installed in the inlet piping of the pump, making certain that it is located where it may be readily serviced (clean). Be sure, however, that the installed strainer will not distort the flow to the pump suction.

CAUTION Do not install the strainer directly on the pump suction nozzle. Strainers should be located at least 6 or 10 pipe diameters upstream of the suction nozzle.

The Flowserve standard for suction strainers consists of conical shaped steel plate with 1.6 mm (1/16 in.) perforations. The open area of the strainer should be a minimum of three times the area of the pump suction.

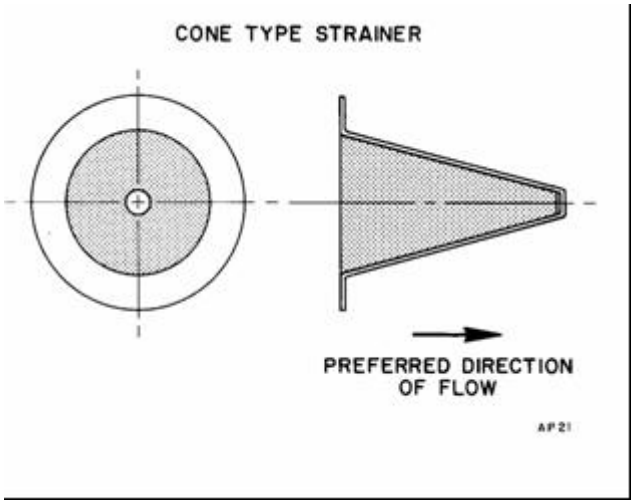

At all times when using suction strainers, it is critical that the pressure drop across the strainer be constantly monitored to ensure that the pump suction pressure does not fall below that required to prevent pump cavitation. Pressure (or vacuum) gauges should be installed on both sides of the strainer so that the pressure drop across the strainer can be monitored. During start-up of the system, the gauges should be monitored continuously. Consult the plant engineer or system designer for the allowable pressure differential across the strainer prior to operating the pump. Pressure differential across the strainer and/or screen is typically no more than 0.2 bar (3 psi). An increase in the differential pressure between the two gauges indicates that the strainer or screen is becoming clogged with dirt and scale. Before the pressure drop becomes so severe that cavitation occurs, the pump should be shut down and the strainer cleaned. Alarm settings to protect the pump from damaging cavitation and loss of suction need to be supplied by the plant engineer or system designer prior to operating the pump. Typically alarm settings to protect the pump from damaging cavitation and loss of suction would be 0.35 bar (5 psi) differential pressure across the strainer (screen). The suction piping should be arranged such that the ultimate strainer configuration (location) allows ready access for cleaning.

The strainer may be fitted with a finer screen to filter the inlet flow. When this is done, 100 mesh screen is typically used for start up operation, at reduced flow rates. For final operation in a closed system, the suction strainers are normally removed after the system is cleaned. For critical pump applications, where continuous screening of suction flow is desirable, and in open systems, 20 mesh screening is typically used for permanent strainers. At all times, when using screens and suction strainers, it is critical that pressure drop across the screen and/or strainer be constantly monitored to ensure that the pump suction pressure does not fall below that required to prevent cavitation.

When dirt and scale have been removed from the system, as indicated by no further change in pressure drop across the strainer with time, the start up strainer may be removed or the screen may be replaced with one having larger openings. If a permanent strainer will be used during normal operation, the pressure differential needs to be monitored on a continuous basis.

CAUTION If a permanent strainer is not used, the start up strainer needs to be temporarily reinstalled whenever the system is opened up for repair or routine maintenance. As long as a suction strainer or screen remains in place, the differential pressure should be monitored on a regular basis.

CAUTION The pressure drop across the strainer is a direct reduction in the NPSH available to the pump. NPSH available must always exceed the NPSH required by the pump. This requirement may limit the pump flow rate, particularly during start-up operation. Alarms or automatic pump shut-down devices should be installed to minimize the possibility of pump damage. It is the responsibility of the pump operator to obtain the allowable pressure drop across the strainer for safe pump operation from the plant engineer or system designer prior to operation of the pump.

4.14 Piping

Note: The following information regarding piping is only offered as a general guideline to the customer. Flowserve Corp. requires that all piping and related

systems be designed/installed in accordance with specifications set forth in Chapter 6 'Piping' from API Recommended Practices 686/PIP REIE 686, First Edition.

Note: Don't install piping until preliminary alignment, grouting and final field weldings have been completed.

Note: The design of piping, and related systems, is not the responsibility of Flowserve Corp. It is therefore recommended that the customer consults a competent specialist skilled in the field of piping, to insure proper design/installation of all piping.

CAUTION Protective covers are fitted to the pipe connections to prevent foreign bodies entering during transportation and installation. Ensure that these covers are removed from the pump before connecting any pipes.

CAUTION Never use the pump as a support for piping.

CAUTION Ensure piping and fittings are flushed before use.

Ensure piping for hazardous liquids is arranged to allow pump flushing before removal of the pump.

4.14.1 Suction and discharge piping

These units are furnished for a particular service condition. Changes in the hydraulic system may affect performance adversely. This is especially true if the changes reduce the pressure at the suction flange. In case of doubt, contact the nearest Flowserve Office.

Suction and discharge piping should be of ample size, be installed in direct runs, and have a minimum of bends.

Install a check valve and a gate valve in the discharge pipe on the pump. When the pump is stopped, the check valve will protect the pump against excessive pressure and will prevent the pump from running backward. The check valve should be installed between the gate valve and the pump nozzle in order to permit its inspection. The gate valve is also useful in priming and starting the pump.

Keep the suction pipe short and direct. Use a suction pipe at least one size larger than the pump suction nozzle. Keep the suction pipe free of all air pockets.

Note: On suction lift the piping should be inclined up towards the pump inlet with eccentric reducers incorporated to prevent air locks.

Note: A spool piece should be installed in suction line so that the suction screen may be installed and removed.

4.14.2 Nozzle loads and piping

Customer to ensure all piping is installed according to design, which should result in nozzle loads below the acceptable limits. All piping supports and hangers must be set properly before operating equipment. Failure to do so may result in damage to pump. When installing suction and discharge nozzle piping, do not force piping to fit up to nozzles. Piping should not be strained in the cold static condition.

CAUTION Maximum forces and moments allowed on the pump flanges vary with the pump size and type. To minimize these forces and moments that may, if excessive, cause misalignment, hot bearings, worn couplings, vibration and the possible failure of the pump casing, the following points should be strictly followed:

- Prevent excessive external pipe load
- Never draw piping into place by applying force to pump flange connections
- Do not mount expansion joints so that their force, due to internal pressure, acts on the pump flange

Note: Piping should be independently supported. When hot liquids will be handled, expansion joints, bends or loops and hangers should be installed to prevent excessive strains on the pump nozzles. Customer should route piping in such a manner that disassembly of pump is not restricted.

4.14.3 Acid wash

CAUTION Pumps that will be subjected to acid wash or flushing of any type intended to clear the piping system of foreign material, must be by-passed to prevent debris from entering the pump. Failure to do so will result in corrosion damage to critical components and deterioration of non metallic parts. In addition, foreign material being flushed through the system may be introduced into the pump.

4.14.4 Bypass line

Customer to provide a suitable minimum flow by-pass system connected to pump discharge prior to first valve. The by-pass flow should be directed to the source of pump suction and designed to handle the minimum flow listed in the General Arrangement Notes. A back pressure device located downstream of the minimum flow valve may be required to suppress valve cavitation or downstream line flashing.

CAUTION Operation at low flow results in pump horsepower heating the liquid. A by-pass may be required to prevent vaporization and subsequent pump damage. Mechanical damage may result from

continuous operation at flows less than 25% of design operating point (see General Arrangement drawing & nameplate).

Note: Refer to the General Arrangement drawings & notes for pertinent data, specifically:

- Piping Notes
- Nozzle Forces & Moments
- Balancing Line
- Minimum Flow Bypass
- Warm Up Line

4.15 Final checks

CAUTION Check the tightness of all bolts in the suction and discharge pipework. Check also the tightness of all foundation bolts.

4.16 Final alignment check

CAUTION After grout has completely set, and pipes been connected to the pump, recheck alignment following the procedure performed in the previous sections.

4.17 Electrical connections

DANGER Electrical connections must be made by a qualified Electrician in accordance with relevant local national and international regulations.

It is important to be aware of the EUROPEAN DIRECTIVE on potentially explosive areas where compliance with IEC60079-14 is an additional requirement for making electrical connections.

It is important to be aware of the EUROPEAN DIRECTIVE on electromagnetic compatibility when wiring up and installing equipment on site. Attention must be paid to ensure that the techniques used during wiring/installation do not increase electromagnetic emissions or decrease the electromagnetic immunity of the equipment, wiring or any connected devices.

DANGER The motor must be wired up in accordance with the motor manufacturer's instructions (normally supplied within the terminal box) including any temperature, earth leakage, current and other protective devices as appropriate. The identification nameplate should be checked to ensure the power supply is appropriate.

A device to provide emergency stopping must be fitted.

If not supplied pre-wired to the pump unit, the controller/starter electrical details will also be supplied within the controller/starter.

For electrical details on pump sets with controllers see the separate wiring diagram.

CAUTION See Section 5.3, before connecting the motor to the electrical supply.

4.18 Protection systems

The following protection systems are recommended particularly if the pump is installed in a potentially explosive area or is handling a hazardous liquid. If in doubt consult Flowserve.

If there is any possibility of the system allowing the pump to run against a closed valve or below minimum continuous safe flow a protection device should be installed to ensure the temperature of the liquid does not rise to an unsafe level.

If there are any circumstances in which the system can allow the pump to run dry, or start up empty, a power monitor should be fitted to stop the pump or prevent it from being started. This is particularly relevant if the pump is handling a flammable liquid.

If leakage of product from the pump or its associated sealing system can cause a hazard it is recommended that an appropriate leakage detection system is installed.

To prevent excessive surface temperatures at bearings it is recommended that temperature or vibration monitoring are carried out.

5 COMMISSIONING, START-UP, OPERATION AND SHUTDOWN

CAUTION ***These operations must be carried out by fully qualified personnel.***

CAUTION Do not wipe down in the vicinity of rotating parts. If unusual noise or vibrations occur, secure the pump as soon as possible.

In the interest of operator safety, the unit must not be operated in excess of the nameplate conditions. Such operation could result in unit failure causing injury to operating personnel.

The unit must not be operated unless the coupling(s) guard(s) is bolted in place. Failure to observe this could result in injury to operating personnel.

CAUTION Before starting or while operating the pump, the pump and suction line must be completely filled with the liquid being pumped and the line must be properly vented. Rotating parts depend on this liquid for lubrication. The pump may seize if operated without liquid.

CAUTION The pump and suction line must be filled with liquid during start-up, operation, and shutdown periods.

CAUTION Never operate the pump with the suction valve closed, and never throttle the pump on the suction side.

CAUTION To reduce output volume, the discharge-line valve may be throttled – but do not operate the pump against a closed discharge valve for longer than 30 seconds.

CAUTION Operation at low flows results in pump horsepower heating the liquid. A flow bypass is required to prevent vaporization and subsequent pump damage. Mechanical damage may result from continuous operation at less than the minimum continuous stable flow (MCSF)—(see General Arrangement drawing notes).

CAUTION Do not operate the pump unless the mechanical seal receives continuous lubricating flush.

5.1 Commissioning

Commissioning of all equipment must be performed in accordance with specifications set forth in Chapter 9 'Commissioning' from API Recommended Practices 686/PIP REIE 686, First Edition.

5.2 Pre-operational checks

At initial start-up and after the equipment has been installed:

a) Ensure pump and piping are clean. Before putting the pump into operation, it should be thoroughly flushed to remove the rust preventive as well as any foreign matter which may have accumulated during installation. Take all possible care not to contaminate your system.
b) Check that the system and pump casing are vented and completely full of liquid.
c) Vent the mechanical seal system by following venting procedure in Section 5.2.2, *Mechanical seal*, and mechanical seal instructions in Section 10.1 of this User Instructions.
d) Ensure that mechanical seal is properly assembled and tightened.

CAUTION Most mechanical seals are equipped with locating spacers between the gland plate and shaft sleeve. Spacers must be removed before starting unit. Do not discard spacers; they are required to maintain proper seal setting during maintenance.

e) Turn rotor by hand or with strap to make sure it turns freely.
f) Check motor rotation by starting unit momentarily. Verify that the motor rotation matches that of the fluid coupling and pump.

The driver rotation must be checked before connecting coupling. Actual damage to the equipment and personal injury could result from operating the unit with wrong rotation.

g) Check torque of all bolting and plugs.
h) Ensure coupling is properly aligned and lubricated, and pump, fluid coupling, and driver are properly doweled (refer to Section 4, *Installation*).
i) Ensure all guards are in place.
j) Be sure that the driver has been prepared for operation in accordance with the manufacturer's instructions.

CAUTION If the driver bearings are not connected to the pump lubrication system, check that the driver oil or grease reservoir(s) have been filled to the proper level as described in the driver manufacturer's instructions.

k) Clean and flush bearing housings and lubrication system. Fill reservoir with oil to the proper level (refer to Section 5.2.1, *Lubrication*).
l) Ensure rotor is aligned within casing (refer to Section 6, *Maintenance*).

5.2.1 Lubrication

Operation of the unit without proper lubrication can result in overheating of the bearings, bearing

failures, pump seizures and actual break-up of the equipment, exposing operating personnel to injury.

Remember that oil requires frequent replenishment at normal operating temperatures and very frequent replenishment at elevated operating temperatures. Oil is always subject to gradual deterioration from use and contamination from dirt and moisture. This deterioration and contamination will, in time, be harmful to the bearings and can cause premature wear. For these reasons, oil should be checked for contamination and deterioration regularly.

The frequency of oil change depends on the operating conditions and the quality of the lubricant. Oil should be checked for deterioration and contamination weekly during periods of operation. Mineral oils oxidize and should be replaced at no more than three month intervals. Longer intervals between replacements may be possible if a routine oil sampling program is used to monitor the oil condition.

5.2.1.1 Oil specifications

Straight mineral oils without additives are generally preferred. It should be a turbine type and not contain free acid, chlorine, sulphur or more than a trace of free alkali. Lubricating oils are identified by an ISO Viscosity Grade (VG) Number. The VG Number is the viscosity of the oil at 40 °C (104 °F) in centistokes. In the majority of instances, a turbine oil with a VG Number of 32 will meet the bearing lubrication requirements (see Section 5.2.1.2, *Oil temperature*).

Oil Characteristics	
Recommended ISO Viscosity Grade (VG) Number	**32**
Viscosity Index	**102**
Pour Point	**-7 °C (20 °F)**
Flash Point	**204 °C (400 °F)**

Lubricant must be compatible with all parts requiring lubrication. Refer to lube, seal, and lube oil console piping drawings and notes for information pertaining to your system.

5.2.1.2 Oil temperature

Cooling oil lubricating system is provided to supply cooled oil to the bearing housings reservoirs. If bearing temperature exceeds the above mentioned limits, make sure cooling water system is on and cooling water is being supplied to the heat exchanger on the cooling oil lubricating system.

CAUTION The minimum bearing oil temperature is 15 ºC (60 °F). The oil lubricating console reservoir is supplied with an immersion heater to maintain the minimum 15 ºC (60 °F) oil temperature. Oil in the reservoir of the oil lubricating system should not be below 15 ºC (60 °F) at pump start up time. If oil temperature is below 15 ºC (60 °F) in pump bearing housings reservoir, oil lubricating console should be started and the warm oil circulated to the pump prior to main pump start up.

5.2.1.3 Cleaning and filling the lubrication system prior to operation

CAUTION Before operating the pump, the lubrication system should be cleaned and checked per the following steps.

To clean the lubrication system:

a) Remove the radial [3210.1] and thrust [3210.2] upper bearing housings (refer to Section 6, *Maintenance*).
b) Remove bearing bushes [3300] from bearing housing. Bearing bushes can be "rolled out". Check for anti rotation pin.

Note: If temperature and/or proximity probes are supplied, remove them prior to removing bearing bushes or thrust shoes.

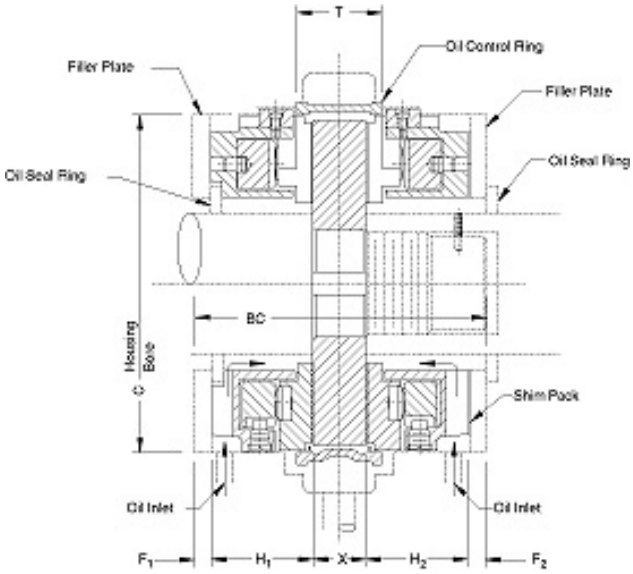

c) Remove shoes [3033] from KTB bearing (see KTB sketches above and below).

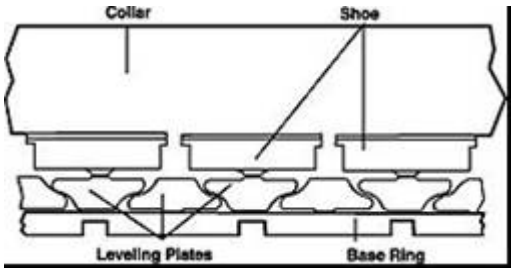

Note: Observe position of shoes as they must be reassembled in the same position and orientation.

Typical KTB shoe

d) Flush out the bearing housings with kerosene or other suitable solvent.
e) Wash the bearing linings/thrust shoes with a suitable solvent.
f) Flush the entire lubrication system following the steps below and refer to the lube system manual for additional information.
g) Break open bearing supply pipe flanges and install 100 mesh screens in the supply line.
h) Fill oil reservoir with oil that is proper grade and viscosity in accordance with lubrication recommendations.
i) Flush through lube oil system filters for a period of at least 4 hours. Shut down and inspect temporary strainers and filters.

Note: During flushing operation, examine the piping for leaks and correct as necessary. Also check for any obstructions that will interfere with free flow of oil to bearings.

j) If screens are not clean, replace with new, clean screens and repeat the previous step.
k) If the screens are clean, clean lube oil reservoir tank, install new, clean filter cartridges, and wipe out bearing housings.
l) Replace KTB shoes [3033], bearing linings [3300] and instrumentation (if necessary).
m) Replace drain plugs, piping and close system and refill with oil that is proper grade and viscosity in accordance with lubrication recommendations.
n) Lubrication system is now ready for routine start up operation.

⚠ Operation of the unit with incorrect oil level setting can result in overheating of the bearings, lack of lubrication to the bearings, bearing failures, pump seizures and actual break-up of the equipment, exposing operating personnel to injury.

5.2.2 Mechanical seal

Your pump is typically shipped with the mechanical seal already installed. All mechanical seals are of the cartridge type design. The mechanical seal is designed to suit each application. This creates the correct seal loading face when seal gland is bolted in place.

Cartridge type mechanical seals are preset at the seal manufacturer's facility and require no field settings. The seal installation should be checked before start-up.

Note: Refer to the mechanical seal manufacturer drawings and instructions found in Section 10.1 of this manual for detailed information.

To remove mechanical seal from pump:
a) Install setting plates/eccentric washer in place.
b) Loosen drive collar.
c) Remove gland bolting.
d) Slide sleeve with mechanical seal [4200] from shaft.

Seal may be disassembled/inspected/reassembled per seal manufacturer's drawing and instructions in Section 10.1 of this manual.

After reassembly of seal, setting plates/eccentric washers must be removed before start up.

⚠ CAUTION Never run a mechanical seal dry, even for a short time.

5.2.3 Pump instrumentation set points

The following set points apply to these WXH Pumps which use a Sleeve/KTB bearing arrangement.

Bearing metal temperature:
- Normal 50 to 85 °C (120 to 195 °F)
- Alarm 90 °C (195 °F)
- Shutdown 95 °C (205 °F)

Bearing housing vibration:
- Normal 2.5 to 7.6 mm/s (0.1 to 0.3 in./sec)
- Alarm 10.2 mm/s (0.4 in./sec)
- Shutdown 12.7 mm/s (0.5 in/sec)

Pump shaft radial vibration:
- Normal 25 to 50 µm (1 to 2 mils)
- Alarm 75 µm (3 mils)
- Shutdown 114 µm (4 mils)

In specific cases it might be possible to exceed published levels above. Should pump operate in excess of shutdown levels, please contact Flowserve.

5.2.4 Motor instrumentation set points

Refer to the Instrumentation List and the vendor's instruction manual for specifics.

5.2.5 Variable speed coupling instrumentation set points

Refer to the Instrumentation List and the vendor's instruction manual for specifics.

5.3 Initial start-up procedure

CAUTION Ensure the pump is given the same rotation as the pump direction arrow cast on the pump casing.

a) Prepare the driver (and variable speed coupling, if included) for start up in accordance with the manufacturer's instructions.
b) Prime pump and ensure pump suction valve is open.

CAUTION Before starting or while operating the pump, the pump and suction line must be completely filled with the liquid being pumped. The rotating parts depend on this liquid for lubrication, and the pump may seize if operated without liquid.

c) Ensure pump recirculating line is open and free of obstructions.

The unit must not be operated unless all guards are in place. Failure to observe this caution could result in personal injury to operating personnel.

d) Discharge valve should be closed.
e) The suction valve should be WIDE OPEN. (Vent system to release entrapped air; close vent system after venting)
f) Suction strainer should be clean and completely free of debris.
g) Be sure that all valves in the suction and balance leakage lines are open. The minimum flow system must be open during starting and stopping and when discharge flow is less than the minimum flow specified on the General Arrangement drawing notes.
h) Make sure all gages are functioning.
i) Turn on the lubrication system and check for proper flow and supply pressure at the bearing housings.
j) Check for any leaks in the lubrication system.

Operation of the unit without proper lubrication can result in overheating of the bearings, bearing failures, pump seizures and actual break-up of the equipment exposing operating personnel to personal injury.

k) Make sure balance line valve is in locked open position. See General Arrangement drawing notes for balance line instructions.

CAUTION The flow of liquid which passes between the balance disc [6210] face and the counter balance disc [6220] face is reduced from the discharge pressure to slightly above suction pressure. This flow and pressure reduction counteracts the hydraulic thrust created by the impellers. Therefore, if balance disc line is closed when the pump is in operation, this counteraction is eliminated and rapid seizure will occur.

l) Check that cooling water is turned on and the proper flow rate is being circulated to the mechanical seal coolers, the pump stuffing boxes, and, if supplied, the motor and pump bearing housings.
m) Check that seal is vented by observing leakage from seal piping vent. Close vent when liquid is emitted. Ensure that the mechanical seal system piping is clear and free of obstructions. Ensure that the magnetic separator isolation valves are open.
n) Prepare the driver (and variable speed coupling, if included) for start up in accordance with the manufacturer's instructions.
o) Start the driver and bring the unit up to speed.
p) As soon as pump is up to speed, slowly open discharge valve. This will avoid abrupt changes in velocity and prevent surging in the suction line.
q) Perform running checks

5.4 Operating checks

In the interest of operator safety, the unit must not be operated above the nameplate conditions. Such operation could result in unit failure causing injury to operating personnel.

CAUTION Operation at low flows results in pump horsepower heating the liquid. A bypass may be required to prevent vaporization and subsequent pump damage. Mechanical damage may result from continuous operation at flows less than min flow value (see General Arrangement drawing notes).

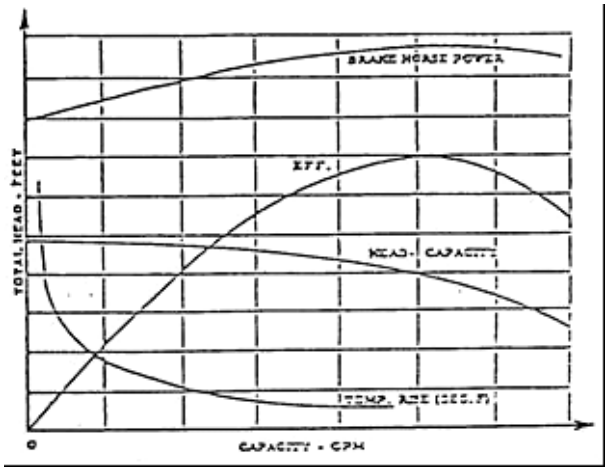

Typical curve showing temperature rise toward shut-off

Operation of the unit without proper lubrication can result in overheating of the bearings, bearing

failures, pump seizures and actual break-up of the equipment exposing operating personnel to injury.

Immediately after start up, and frequently during running, check the following:

a) Check suction pressure and HP and IP discharge pressures.
b) Check differential pressure across the suction strainer.

CAUTION If pressure differential across suction strainer exceeds 0.35 bar (5 psi), shut down the pump immediately, and clean the suction strainer.

c) Check mechanical seal areas; there should be no visible leakage to the naked eye.
d) Check the mechanical seal water temperature. (Refer to Instrument List and/or mechanical seal drawing).
e) Check for unusual noises.
f) Check for adequate flow of cooling liquids.
g) Check for adequate flow of bearing lubricating oil.
h) Isolate and inspect the magnetic separators located in seal flush piping. (Refer to the seal piping drawing).

CAUTION Mechanical seals are particularly sensitive to impurities in the feed water system. To prevent damage to the mechanical seal faces, daily inspection and cleaning of the magnetic separators is strongly recommended.

CAUTION When disassembling the magnetic separators, make sure that the unit is isolated from the seal flush system using the bypass valves.

i) Check vibration levels are below those indicated on the Instrumentation List.
j) Check the pump and motor bearing temperatures. (Refer to the Instrumentation List).
k) After unit has been operated a sufficient length of time to reach normal operating temperature and condition, the unit is to be shut down and a hot coupling alignment check must be made (refer to Section 4, *Installation*).

⚠ Do not attempt any maintenance, inspection, repair or cleaning in the vicinity of rotating equipment. Such action could result in personal injury to operating personnel.

5.5 Normal start-up

The starting procedure to be followed for normal start up is the same as that for initial starting.

5.6 Securing the pump

a) De-energize driver circuit.
b) The pump should be shut down rapidly to protect the internal wearing parts which are lubricated by the liquid being pumped. Lubrication is reduced when a pump is stopped slowly, and seizure could result.

CAUTION If pump stops abruptly when driver is shut down, investigate for rotor binding. Take necessary remedial action before re-starting pump.

c) Close the pump suction and discharge valve, balance line, (and intermediate stage take off line valve if supplied).
d) Close valve in bypass line.
e) Turn off cooling water.
f) Turn off the lubrication system.

CAUTION If pump is subjected to freezing temperatures, the pump must be drained of liquid to prevent damage to pump.

6 MAINTENANCE

6.1 Security

It is the plant operator's responsibility to ensure that all maintenance, inspection and assembly work is carried out by authorized and qualified personnel who have adequately familiarized themselves with the subject matter by studying this manual in detail. (See also Section 1.6.2, *Personnel qualification and training*).

Any work on the machine must be performed when it is at a standstill. It is imperative that the procedure for securing the machine is followed, as described in Section 5.6.

On completion of work all guards and safety devices must be re-installed and made operative again.

Before restarting the machine, the relevant instructions listed in Section 5, *Commissioning, start up, operation and shut down*, must be observed.

Oil and grease leaks may make the ground slippery. Machine maintenance must always begin and finish by cleaning the ground and the exterior of the machine.

If platforms, stairs and guard rails are required for maintenance, they must be placed for easy access to areas where maintenance and inspection are to be carried out. The positioning of these accessories must not limit access or hinder the lifting of the part to be serviced.

When air or compressed inert gas is used in the maintenance process, the operator and anyone in the vicinity must be careful and have the appropriate protection.

Do not spray air or compressed inert gas on skin.

Do not direct an air or gas jet towards other people.

Never use air or compressed inert gas to clean clothes.

Before working on the pump, take measures to prevent an uncontrolled start. Put a warning board on the starting device with the words ***"Machine under repair: do not start"***.

DANGER With electric drive equipment, lock the main switch open and withdraw any fuses. Put a warning board on the fuse box or main switch with the words ***"Machine under repair: do not connect".***

6.2 Preventive maintenance schedule

Although your Flowserve pump has been designed for extended, trouble free service, certain preventive maintenance measures should be performed on a regular basis to ensure optimum performance. A well planned program of routine maintenance is the best assurance of dependable operation. The following preventive maintenance (PM) inspections are suggested as a minimum, and may be supplemental by the experience of the operating personnel.

Preventive maintenance inspections should include the following:

Preventive Maintenance Item	Instructions	Frequency
Suction Strainer	Check pressure differential between the gauges located on each side of the strainer.	Daily
Pump Suction and Discharge Flow Rates	Check suction and discharge pressure gauges for proper pump operation.	Daily
Mechanical Seal	Visually.	Daily
Instrumentation	Check all related pressure gauges, temperature detectors, etc. to detect any abnormalities.	Daily
Bearing Housings	Check sight gauges.	Daily
Auxiliary Piping	Check for leakage around connections, etc.	weekly
Shaft/Casing Vibration	Review all vibration data for any abnormalities and/or sudden changes in levels.	weekly
Bolting Tightness	Check external bolting for proper tightness.	Monthly
Cleanliness	General clean-up soiled areas.	Quarterly

6.3 General

Your Flowserve pump is a precision machine. Take every precaution to avoid damage or even slight burrs to any of the machined surfaces when dismantling the pump.

Before performing any disassembly, maintenance, or inspection on the unit, the following steps should be taken and warnings observed:

a) Lock and tag driver controls in the “off” position.
b) Isolate pump from system.
c) Drain pump of all fluid.

⚠ Do not attempt any maintenance, inspection, repair or cleaning in the vicinity of rotating equipment. Such action could result in injury to operating personnel.

⚠ When pump is handling hot liquid, extreme care must be taken to ensure safety of personnel when attempting to drain pump. Hot pumps must be allowed to cool before draining.

⚠ In the interest of operator safety when handling any heated parts protective gloves or other suitable protection must be worn.

⚠ Before attempting any inspection or repair on the pump, the driver controls must be in the “off“ position, locked, and tagged to prevent injury to personnel performing service on the pump.

⚠ Before attempting to disassemble the unit, the pump must be isolated from the system by closing the suction and discharge valves. The pump should be carefully vented to release casing pressure. Drain all liquid.

⚠ When the pump is handling toxic, flammable, corrosive, or extreme-temperature liquids, extra care must be taken when draining the pump to ensure the safety of personnel. Suitable protective devices must be worn when draining the pump. Liquids at extreme temperatures (hot or cold) must be allowed to reach safe temperature before draining.

6.4 Torque values

For pump hold down torque value (and driver, if Flowserve supplied) see Section 6.8, *Torques and clearances*, of this User Instructions book. Recommended Torque Values are selected to achieve the proper amount of pre stress in the threaded fastener. Maintenance personnel must insure that threads are in good condition (free of burrs, galling, dirt, etc.) and that commercial thread lubricant is used. Torque should be periodically checked to assure that it is at the recommended value.

⚠ When reassembling pump, all fasteners must be tightened to the proper torque value. Failure to observe this warning could result in injury to operating personnel.

6.5 Coupling removal

Remove coupling guard. Refer to coupling drawing and installation instructions for removal. Remove coupling bolting and remove the spacer piece. Loosen setscrews in coupling lock nut and remove coupling lock nut [7411].

The coupling hub has a shrink fit to the pump shaft. The use of a puller and heat will be required to remove it from the shaft.

Note: Remove pump half coupling hub by heating to approximately 149 ºC (300 ºF) in successive stages from periphery of coupling toward center. If equipped with a gear type coupling, NEVER APPLY AN OPEN FLAME TO COUPLING HUB TEETH.

6.6 Dismantling procedure

6.6.1 General

a) Remove all auxiliary piping and instrumentation that will interfere with disassembly and drain oil from bearing housings.

⚠ Use extreme caution not to expose maintenance personnel to hot liquids when removing auxiliary piping or draining bearing housings.

b) Remove temperature detectors (if supplied) from bearing housings.
c) Remove shaft vibration probes (if supplied) from bearing housings.
d) Install mechanical seal setting plates/eccentric washer.
e) Loosen mechanical seal gland bolting and drive collar setscrews of mechanical seals.
f) A removable pedestal has been supplied with the pump as an assembly fixture. When removing the pump from bedplate, it is recommended that the pedestal and pump be removed as single unit. When lifting the pedestal, use (4) lifting lugs located on pedestal.

Note: When dismantling the pump, refer to Sectional Assembly drawing, found in Section 8 of this User Instructions book.

6.6.2 Thrust bearing removal

a) Remove capscrews and bearing end cover [3266] from thrust bearing housing [3200.2].

b) Remove shim [3126.3].
c) In case the bearing housing is sealed by flingers, loosen setscrews in pump side flinger and slide it back on the shaft towards the mechanical seal.
d) Remove capscrews holding thrust bearing housing upper [3210.2] to housing [3200.2]. Using eyebolts lift off thrust bearing housing upper [3210.2]. Springs [4263.2] and spring retainers may fall from cap. Do not lose. Place cap on blocking, to prevent damaging machined surfaces.
e) Remove thrust shoes first, then base ring assemblies from KTB assembly [3033]. Tag parts for reassembly.
f) Remove top half of bearing bush [3300].
g) Loosen setscrews and remove bearing nut [3712]. Remove thrust bearing plate [3610] (slight heat may be required) with key [6700.4], sealing ring, and shims [3126.3]. Tag and record thickness of shims for reassembly.

⚠ In the interest of operator safety when handling any heated parts, protective gloves or other suitable protection must be worn.

h) Remove bottom half of bearing bush [3300] by carefully raising shaft [2100] and rolling bearing out from under the shaft.
i) Install eyebolts in bearing housing [3200.2] and rig to an overhead hoist.
j) Loosen and remove capscrews and dowel pins. Carefully remove bearing housing [3200.2] from discharge casing [1140], with springs and spring retainers, and place on blocking on floor.
k) Gather together and tag 4 springs and 4 spring retainers.
l) In case the bearing housing is sealed by flingers, remove flinger from the shaft.
m) In case the bearing housing is sealed by labyrinth sleeves, remove labyrinth sleeve [3709] with its pins and circular joint ring [4595.1] from shaft.

6.6.3 Radial bearing removal

a) In case the bearing housing is sealed by flingers, loosen setscrews from coupling side and mechanical seal-side flingers and remove the flinger (coupling side) from end of shaft, and slide the flinger (mechanical seal-side) on the shaft toward the mechanical seal.
b) Remove capscrews and dowel pin from radial bearing housing upper [3210.1]. Rig eyebolt in bearing cap to an overhead hoist and lift bearing cap from bearing housing and place on blocking on the floor.
c) Remove upper half bearing bush [3300] with pin.
d) Remove bottom half of bearing bush [3300] by carefully raising shaft [2100] and rolling bearing out from under the shaft.
e) Install two eyebolts in diagonally opposite corners of bearing housing [3200.1] and rig to an overhead hoist. Remove capscrews and dowel pins from bearing housing. Using the overhead hoist, lower and remove bearing housing from suction casing [1130].
f) In case the bearing housing is sealed by flingers, remove flinger from the shaft.
g) In case the bearing housing is sealed by labyrinth sleeves, remove labyrinth sleeves [3709] with their pins and circular joint rings [4595.1] from shaft.

6.6.4 Mechanical seal removal

Refer to mechanical seal instructions (located in Section 10.1) for detailed information on seals.

a) Loosen capscrews securing the mechanical seal setting plates. Rotate setting plates in the space between the gland and drive collar. Retighten the capscrews. Do this on both ends of pump.
b) At both ends of pump, remove gland hex nuts and washers from mechanical seals [4200]. Loosen setscrews in drive collar that hold seal to pump shaft [2100] and remove seals (intact as units), with sleeve and circular joint rings from pump shaft [2100]. Mark/tag each seal assembly for inboard or outboard location.

6.6.5 Stuffing box housing removal

a) At thrust end of pump, remove capscrews that hold stuffing box housing [4110] in place.
b) Place eyebolts in top of stuffing box housing [4110] and carefully remove housing over the end of pump shaft. Circular joint ring [4595.10] should come off with housing.

6.6.6 Balance disc removal

a) Loosen the setscrews in balance disc retaining ring [2530] and remove ring.
b) Push shaft [2100] towards thrust bearing end to help facilitate the removal of the retaining ring sleeve [2482]. It will be necessary to push the balance disc [6210] inboard so that the retaining ring sleeve [2482] may be easily removed from its groove. Heat should not be applied to the balance disc in order to move inboard (loose fit rotor). Make sure rotor does not move inboard when moving balance disc inboard.

Note: Do not use a pry to facilitate removal of the retaining ring sleeve.

c) Remove retaining washers [3126.1/2] after retaining ring sleeve [2482] is removed. Record the number and size of retaining washers [3126.1/2] for use in reassembling the pump. It

is recommended the retaining washers be tied together.

d) Two screws may be inserted into the back of the balance disc to facilitate removal. There is a circular joint ring [4595.9] located between the balance disc [6210] and shaft [2100]. Slide the balance disc [6210] out carefully so as not to damage the circular joint rings. Remove key [6700.3] from shaft [2100].

CAUTION The utmost of care should be taken when removing this balance disc as it may gall and pick up if not removed properly.

6.6.7 Disassembly of pump

Note: When moving pump, the pump should remain bolted to its assembly fixture and be moved with the assembly fixture.

Note: Identify all impellers, keys, stage casings and diffusers by marking them as they are removed with the appropriate stage number so that they are reassembled in the same location.

Note: Impellers are a loose fit on the shaft. All impellers [2200] are removed and installed over the thrust (outboard) end of the pump shaft [2100].

Clean exposed shaft areas of any dirt or burrs. Protect bearing journal areas of shaft by covering with hard sheet packing or similar material.

6.6.7.1 Discharge casing removal

a) Remove the flexloc-nut/studs and capscrews that hold the discharge casing feet and suction casing to the assembly fixture. Pump is located on assembly fixture by a pin and key block. The pin is under the suction casing and key under discharge casing; be careful when pulling pump off the pin.

b) Loosen the main bolting nuts [6580] at suction casing end of the tie bolts [6571.1/2/3]. Do not remove nuts [6580] at this time.

Note: Loosen by alternating diagonally opposite nuts.

c) Block inboard end of shaft such that the shaft does not slide through the impellers when hoisting the unit into a vertical position. Rig the pump assembly to an overhead crane and remove pump from pedestal, hoisting it into a vertical position. Discharge end of pump should be upward. Stand the pump assembly on blocking over an opening so that the shaft [2100] portion, protruding past the suction casing [1130], does not contact the floor.

d) Remove nuts [6580] and washers [2905.1] from tie bolts at the suction end of pump. Remove the tie bolts [6571.1/2/3] by sliding them through the discharge casing [1140].

e) Sling straps around feet of discharge casing [1140] and lift off of last stage stage casing/diffuser [1150.2/1410.3]. Counter balance disc [6220] and circular joint ring [4595.8] will come off with discharge casing. circular joint ring [4595.6] will remain in discharge casing during disassembly.

Note: Use care when sliding assembly off shaft to prevent the counter balance disc from contacting the shaft.

f) Remove capscrews and lockwashers holding counter balance disc to inside of discharge casing [1140]. Remove counter balance disc [6220] and circular joint ring [4595.8] from discharge casing [1140].

6.6.7.2 Rotor disassembly

a) Remove last stage diffuser [1410.3]. Since it is a tight fit on the stage casing [1150.2], slight heat may be required to remove diffuser from stage casing.

b) Remove last stage impeller [2200.3] and key [6700.3] from shaft. If impellers cannot be removed from pump shaft, slight heating may be used to enlarge impeller bore. Apply heat (torch with rosebud tip) to periphery of impeller until temperature reaches 90 ºC (200 °F) minimum to 105 ºC (225 °F) maximum. Use tempilstick to determine temperature.

Note: Impellers have a loose fit onto the shaft.

c) Remove last stage casing [1150.2]. If stage casing is hard to remove, slight heat may be applied at fit. Circular joint ring [4595.5] is located between faces of stage casings. Pry slot has been provided on outer diameter of stage casings.

d) Continue to remove impellers [2200.2], keys [6700.3], stage casings [1150.1], diffuser [1410.2], and circular joint rings [4595.5] using same procedure described in *b* and *c*.

e) After 2nd stage impeller [2200.2] is removed, remove stage casing [1160], inlet ring [1910], interstage sleeve [2410], first stage diffuser [1410.1], first stage impeller [2200.1] and key [6700.3] and circular joint rings [4595.2/3/4/5].

f) After first stage impeller [2200.1] is removed, casing wear ring [1500.1] will remain in internal suction casing [1130.2].

g) Remove retaining ring [2530] and shaft [2100].

h) Remove internal parts of the internal suction casing, washers and joint rings.

6.7 Inspection & renewal of parts

Note: Wire brush the pump parts thoroughly. Clean off all scale, carbon, etc. Examine parts for wearing, corrosion and erosion.

6.7.1 Shaft

Having completely dismantled the pump, set the bare pump shaft [2100] on rollers or V blocks at the bearing journal areas and check run out. Rollers must be wide enough so as not to cause indentations in journal areas. The maximum run out should not be more than 0.05 mm (0.002 in.) total indicator reading.

Note: Do not use bearing centres to check run out.

6.7.2 Balance disc

Check balance disc [6210] for wear, cracks, and pickup. Check the counter balance disc [6220] and make sure it has not rubbed. If it is worn, replace.

6.7.3 Stage casing wear rings & casing wear rings

The casing wear rings [1500.1/2] and stage casing wear rings [1500.1/2] are renewable and should be replaced when badly grooved and/or when performance does not meet system requirements.

Casing wear rings [1500.1/2] or stage casing wear rings [1500.1/2] can be drilled at one or more places and split. Rings too hard to drill can be weakened by grinding with a small hand grinder.

To replace casing wear rings [1500.1/2] or stage casing wear rings [1500.1/2], it is advisable to shrink them by freezing. Replacement bushings and casing wear rings will be 1/8", undersize. Install rings, then turn to its original running clearance.

6.7.4 Impellers

If the clearances between the impeller wear areas and the stationary wearing areas need to be renewed, undersize stationary wearing parts will be furnished. Impeller wear rings [2300] (if supplied) can be turned to remove light grooving. Do not turn beyond this.

6.7.5 Counter balance disc

The counter balance disc [6220] is bolted to the discharge casing [1140] with circular joint ring [4595.8], socket casing capscrews and washers. Make sure counter balance disc is not cocked during installation.

6.7.6 Mechanical seals

Refer to seal drawing and instructions in this User Instructions book.

6.7.7 Retaining ring

Inspect retaining ring [2530] for grooves, pitting, scoring or worn setscrew threads. Worn retaining ring must be replaced. If threads are not too badly worn, redress threads.

6.7.8 Thrust shoes (KTB)

Inspect shoes for signs of wiping or grooving. Badly wiped shoes must be replaced. Small grooves or light wiping may be removed by careful scraping. When dressing thrust shoes, a uniform thickness must be maintained by use of a micrometer.

Note: Any metal that is removed from the shoes will effect the total endplay of the thrust bearing. When the amount of shims used to establish endplay has been increased 3/32” over the original amount, replacement of the shoes are required. Thrust shoes must be replaced in sets.

6.7.9 Thrust bearing plate

Check thrust bearing plate for scoring or burrs. Small score marks or burrs can be removed by stoning or light filing.

Note: Any metal that is removed from the thrust bearing plate will effect the total endplay of the thrust bearing. When the amount of shims used to establish end play has been increased 3/32” over the original amount, replacement of the bearing plate is required.

6.7.10 Radial bearings

Check running clearances. Check bearing babbit surfaces for signs of wear, cracking, flaking, or grooving. Shallow grooves or worn spots must not be removed by scraping. Any scraping of the bearing may tend to upset the oil wedge that supports the shaft. Badly worn bearings must be replaced.

Note: Journal bearing clearances may be considered excessive when the diametral clearance increases to 0.10 mm (0.004 in.) over the normal maximum clearance. If conditions permit and the unit has exhibited smooth operation, the bearings may be kept in service even if they exceed the recommended maximum clearance. Bearing replacement is left to the discretion of the operating engineer.

6.7.11 Circular joint rings

Renew all circular joint rings [4595.1/2/3/4/5/6/7/8/9/10].

6.8 Torques and clearances

6.8.1 Clearances

- Impellers [2200] front hub to casing wear rings [1500]: 0.30 – 0.36 mm (0.012– 0.014 in.)
- Impellers [2200] back hub to ch. ring bushings [1500]: 0.30 – 0.36 mm (0.012– 0.014 in.)
- Balance disc [6210] to counter balance disc [6220]: 0.30 – 0.36 mm (0.012– 0.014 in.)

6.8.2 Torque values

Torque values listed below are selected to achieve the proper amount of pre-stress in the threaded fastener. Maintenance personnel must ensure that threads are in good condition (free of burrs, galling, dirt, etc.) and that commercial thread lubricant is used. Torque should be periodically checked to ensure that it is at the recommended value.

Radial bearing housing [3200.1] to suction casing [1130] bolting	427–501 (315–370)	N·m (lbf·ft)
Thrust bearing housing [3200.2] to discharge casing [1140] bolting	427–501 (315–370)	N·m (lbf·ft)
Radial bearing housing [3200.1] to bearing housing upper [3210.1] bolting	104–122 (77–90)	N·m (lbf·ft)
Thrust bearing housing [3200.2] to bearing housing upper [3210.2] bolting	104–122 (77–90)	N·m (lbf·ft)
Mechanical seal [4200] to suction casing [1130] and stuffing box housing [4110] bolting	251–264 (185–195)	N·m (lbf·ft)
Stuffing box housing [4110] to discharge casing [1140] bolting	309–325 (228–240)	N·m (lbf·ft)
Counter balance disc [6220] to discharge casing [1140] bolting	309–325 (228–240)	N·m (lbf·ft)
Bearing end cover [3266] to thrust bearing housing [3200.2] bolting	104–122 (77–90)	N·m (lbf·ft)
Tie bolt nuts [6580]	7922–8338 (5843–6150)	N·m (lbf·ft)
Pump to pedestal (coupling side)	962–977 (710–735)	N·m (lbf·ft)
Pump to pedestal (thrust bearing side)	962–977 (710–735)	N·m (lbf·ft)
Pedestal to baseplate	717–755 (973–1024)	N·m (lbf·ft)

6.9 Rebuilding pump for installation

6.9.1 Rebuilding pump

a) Place pump shaft [2100], first stage impeller key [6700.2] and impeller [2200.1] on horses/V blocks supported at the mechanical seal area of the shaft. Block to prevent rolling.
b) Rig the suction casing [1130] to an overhead hoist and lay it on blocking over an opening so that the shaft can be vertically inserted without contacting the blocking.
c) Place internal suction casing [1130.2] into the suction casing [1130.1] with washers and circular joint rings [4595.2/3/4/5].

CAUTION Do not damage the circular joint ring [4595.2] during installation process.

Note: In the interest of operator safety when handling any heated parts protective gloves or other suitable protection must be worn.

d) Install shaft [2100] and retaining ring [2530] with the first stage impeller [2200.1], into the suction casing [1130]. Block the shaft.

Note: Impellers have a loose fit onto the shaft.

Note: Stage casing is a loose fit into the suction casing [1130].

e) Install the stage casing [1150.1]/diffuser [1410.1] assembly, with its casing wear ring [1500] and joint rings already in place, into the suction casing [1130].
f) Install interstage sleeve [2410] and inlet ring [1910].
g) Install stage casing [1160].
h) Install the second stage impeller [2200.2] and its key [6700.3] onto the shaft [2100].
i) Continue to install stage casings [1150.1] diffuser [1410.2] assembly, stage casing wear rings [1500], circular joint rings [4595.5], impellers [2200.2], and impeller keys [6700.3] for the remaining stages.
j) Install last stage diffuser [1410.3], onto stage casing [1150.2], impeller [2200.3] and impeller key [6700.2].

Note: Diffusers [1410.1/2/3] have a loose/tight fit onto the stage casing [1150.1/2].

k) Install circular joint ring [4595.8] into its groove in the counter balance disc [6220]. Install counter balance disc into discharge casing [1140] using capscrews and lockwashers. Torque to recommended value. (See Section 6.8.2, *Torque values*).

CAUTION Do not damage circular joint ring [4595.8] during installation process.

l) Rig discharge casing to overhead hoist and lower into place over the last stage diffuser [1410.3] and stage casing [1150.2] making sure circular joint ring [4595.8] is in the groove on the face of discharge casing.
m) Install all tie bolts [6571.1/2/3] through holes in discharge casing [1140] and move down through holes in suction casing [1130]. If they were removed previously during dismantling, install washers [2905.1] and nuts [6580] at the discharge end of the tie bolts. Bottom out the tie bolts into the nuts. Use a good thread compound on the studs.
n) Install washers [2905.1] and nuts [6580] at suction casing end of tie bolts. Do not torque at this time, hand tighten only.
o) Lift and manoeuvre assembled pump into a horizontal position and set onto pump assembly fixture. Bottom hole on suction casing [1130] must fit over alignment pin on assembly fixture.

Note: Make sure radial end of shaft is blocked towards the thrust end; otherwise shaft may slide out of the loose fit impellers.

p) Lubrication between pedestal and pump feet may be required to allow pump feet to slide when torquing tie bolts.
q) Studs and locking nuts are provided for the four feet – two in each casing. Tighten the suction feet to the assembly fixtures with studs and locking nuts to a torque value less than ½ the recommended value. (See 6.8.2, *Torque values*). Once the discharge casing feet line up with tapped holes in assembly fixture tighten these bolts in the same manner as the suction casing. Do not torque hold down bolting at this time.
r) Use feeler gage to make sure all feet are contacting assembly fixture pump pads before tightening the tie bolts. After tightening the distance between any foot and a pedestal should be 0.25 mm (0.010 in.) or less.
s) Start torquing nuts [6580] at suction end of pump. Be sure that suction and discharge casings remain parallel while torquing. When tightening nuts, tighten diagonally opposite nuts to ensure casing is pulled into place evenly. Torque to recommended value. (See Section 6.8.2, *Torque values*).

CAUTION No matter how discharge casing is pulled into place, it is vital that it is pulled square. Don't let any part of the casing get out of parallel by more than 1.5 mm (0.06 in.).

t) Check the distance between casings. Using a bolt or bar and feeler gauge, measure all around the pump casing circumference. Adjust torque on nuts [6580] until casings are parallel within 0.25 mm (0.010 in.). Ensure the rotor turns freely.
u) Install alignment key between bottom portion of discharge casing [1140] and key block on pedestal.

6.9.2 Rotor end play / balance disc installation

The total end play will be found to be approximately 8 – 11 mm (5/16 - 7/16 in.). However, the exact dimension for each pump must be determined to be assured of adequate axial clearance between the rotating components and stationary parts.

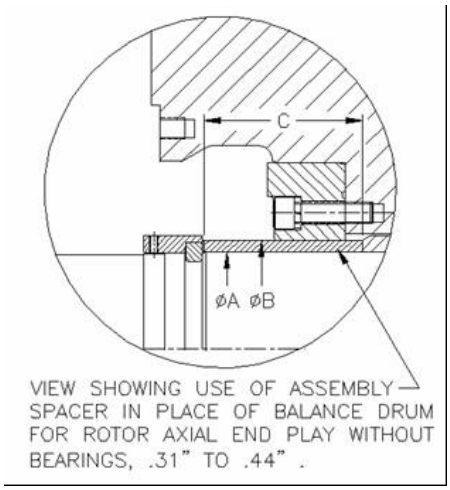

a) Push rotor gently outboard as far as it will go. On outboard end of shaft, install balance disc assembly spacer as shown below, assemble shims [3126.1/2] as necessary, retaining ring sleeve [2482] and retaining ring [2530]. Tighten setscrews.

Note: Front face portion of the balance disc assembly spacer should butt up against back hub of last stage impeller [2200.3]. (All impellers should be locked together). The amount of shims used will not be the same as during final assembly. The dimensions of the assembly spacer are shown below for reference.

BALANCE DISC ASSEMBLY SPACER DIMENSIONS			
Pump type	**A(ID)**	**B(OD)**	**C(Length)**
3X10WXH	66.5 mm (2.62 in.)	76.2 mm (3.00 in.)	96.8 mm (3.81 in.)
3X11WXH	76.2 mm (3.00 in.)	88.9 mm (3.50 in.)	117.3 mm (4.62 in.)
4X12WXH	91.9 mm (3.62 in.)	114.3 mm (4.50 in.)	128.5 mm (5.06 in.)
6X14WXH	108.0 mm (4.25 in.)	131.8 mm (5.19 in.)	138.2 mm (5.44 in.)

b) Pull the rotor assembly inboard as far as possible. Put masking tape on shaft per following sketch. Place a straight edge across the discharge casing, rest it on the shaft, and mark tape as shown.
c) Push rotor gently outboard as far as it will go. Mark tape again, as above. Block coupling end of shaft to hold it outboard.

CAUTION Do not push rotor back & forth more than once or twice as damage to close running clearances may result.

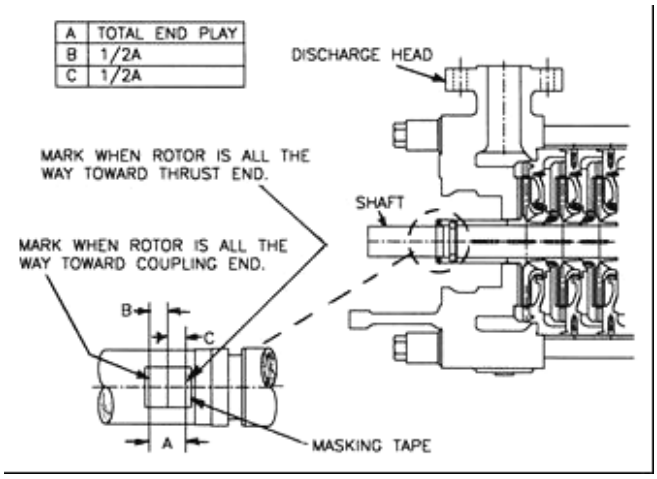

d) Measure the distance between the two marks. This distance will be divided into half. Mark this line; it represents the desired impeller/diffuser position.
e) Loosen setscrews and remove retaining ring [2530], retaining ring sleeve [2482], shims [3126.1/2] and assembly spacer.
f) Install balance disc key [6700.3] into shaft [2100].
g) Install circular joint ring [4595.9] into inner diameter groove of balance disc [6210].
h) Balance disc [6210] has a loose fit to the shaft [2100]. Install balance disc [6210] onto shaft. Install shims [3126.1/2], retaining ring sleeve [2482], and retaining ring [2530], and tighten setscrews.
i) Push rotor gently inboard as far as it will go. Bring balance disc [6210], shims [3126.1/2] and retaining ring sleeve [2482] metal to metal.
j) Check with straight edge to see if rotor is now in desired position. That is, does the straight edge fall on middle line on masking tape.
k) If the rotor is not properly positioned, add or subtract shims [3126.1/2] at balance disc [6210] to correct alignment.

6.9.3 Installation of outboard stuffing box housing

a) Renew circular joint ring [4595.9] and assemble to circular joint ring groove on stuffing box housing [4110].
b) Lift and install stuffing box housing [4110] over the outboard end of shaft [2100].
c) Enter stuffing box housing [4110] into its fit of the discharge casing. Install capscrews.
d) Tighten capscrews using utmost care to draw the stuffing box housing [4110] up parallel to its mating face. Torque to recommended value. (See Section 6.8.2, *Torque values*).

6.9.4 Checking rotor vertical lift

It is necessary to check and record the vertical lift of the rotor within the casing.

a) Place a dial indicator on the upper portion of the suction and discharge casings, with the indicator tip resting on the top of the shaft. Zero the indicator.
b) Using a bar and a block of wood under the shaft, lift the shaft and record the movement. Take measurements at both ends of the pump.
c) The minimum acceptable vertical movement is the impeller ring clearance on the suction end of the pump and the minimum counter balance disc/balance disc clearance on the discharge end of the pump.
d) If this minimum movement is not obtained, the cause must be investigated and corrected.

6.9.5 Shaft alignment

a) In case the bearing housings are sealed by labyrinth sleeves, position inboard labyrinth sleeves [3709] with their circular joint rings [4595.1] onto the shaft [2100].
b) In case the bearing housings are sealed by flingers, position inboard flingers [2540] onto the shaft [2100] near mechanical seals [4200].
c) Rig radial bearing housing [3200.1] to suction casing [1130]. (Make sure that labyrinth sleeves are positioned in the correct position onto the bearing housing, as well as their pins, if applicable). Install dowel pins and snug capscrews.
d) Install both horizontal and vertical adjusting screws in the bearing housing mounting flange. Remove dowel pins.
e) Wipe a film of oil on journal area of shaft. Place lower half of bearing bush [3300] on shaft. Wipe a film of oil on lower half outer diameter of bearing bush. Roll lower half of bearing bush into lower half of bearing housing [3200.1].
f) Rig the thrust bearing housing [3200.2] to an overhead hoist as done during disassembly. Assemble thrust bearing housing [3200.2] to discharge casing [1140]. Install dowel pins and snug capscrews. (Make sure that labyrinth sleeve is positioned in the correct position onto the bearing housing, as well as its pins, if applicable). Install both the horizontal and vertical adjusting screws in bearing housing mounting flange. Remove dowel pins.

g) Wipe a film of oil on journal area of shaft. Place lower half of bearing bush [3300] on shaft. Wipe a film of oil on lower half outer diameter of bearing bush and roll lower half of bearing bush into lower half of bearing housing [3200.2].
h) Using a set of inside spring callipers and the adjusting screws adjust the horizontal and vertical position of the shaft at the radial bearing end so that the distance between the shaft and the stuffing box bore is the same all the way around.
i) Repeat step *f to* align thrust end within the stuffing box bore then recheck radial end. Pump shaft should turn free with no indication of binding or rubbing. This should be taken into consideration when making adjustments.
j) When vertical and horizontal alignment is obtained, tighten bearing housing bolting except the two top bolts at the adjusting screws. Ream dowel holes and install dowel pins. Loosen adjusting screws and tighten the two top bearing housing bolts.

6.9.6 Balance disc and thrust bearing setting

a) Roll out lower half of both bearing bushes [3300]. Remove both radial/thrust bearing housings [3200.1/2].
b) Install the stuffing box bushings in the bottom of the stuffing boxes followed by the inboard mechanical seals [4200] on both ends of the pump. Make sure circular joint ring(s) are inserted in the seal grooves before installing the mechanical seal. Install gland studs and nuts at this time. Torque to recommended value. (See Section 6.8.2, *Torque values*). Do not tighten the drive collar setscrews at this time.

CAUTION Care must be taken not to damage the shaft sleeve circular joint ring when sliding the seal over the shaft.

c) Re-install the radial bearing housing [3200.1] to the suction casing [1130] as done before. Install dowel pins with nuts and capscrews. Torque capscrews to recommended value. (See Section 6.8.2, *Torque values*).
d) Wipe a film of oil on lower half of bearing bush [3300]. Raise shaft slightly and roll lower half bearing bush into radial bearing housing [3200.1].
e) Install radial bearing housing upper [3210.1]. Install capscrews/lockwashers and tighten.
f) Re-install the thrust bearing housing [3200.2] to the discharge casing [1140] as done before. Install dowel pins with nuts and capscrews. Torque capscrews to recommended value. (See Section 6.8.2, *Torque values*).
g) Wipe a film of oil on lower half of bearing bush [3300]. Raise shaft slightly and roll lower half bearing bush into trust bearing housing [3200.2].
h) Place dial indicator at the inboard coupling end of the pump against the shaft [2100]. Push the shaft toward the coupling end and set the dial indicator to zero.

Note: Do not force, as rotor will stop when balance disc [6210] contacts counter balance disc [6220].

i) Install shim [3126.3] and inboard seal ring into position on shaft [2100].

Note: Do not install springs [4263] and spring retainers at this time.

j) Install shims [3126.3] against shaft shoulder if amount was recorded at disassembly. If this is an initial assembly, start with a total shim thickness of approximately 1.5 mm (0.060 in.).
k) Install thrust bearing plate key [6700.4]. Install “dummy” thrust bearing plate on shaft [2100]. Install bearing nut [3712] but do not tighten.

Note: The “Dummy” thrust bearing plate is identical to the thrust bearing plate [3610] supplied but the fit on the shaft is loose instead of tight.

l) Install lower and upper halves of KTB thrust bearing [3033] base and thrust shoes.

Note: Wipe a thin film of oil on KTB parts [3033] before installing.

m) Tighten bearing nut [3712] to force “dummy” thrust bearing plate against KTB thrust shoes [3033]. Check indicator reading at coupling end. Indicator should show a 0.025 to 0.076 mm (0.001 to 0.003 in.) reading. This reading is the clearance required between the face of the balance disc [6210] and counter balance disc [6220]. If adjustment is necessary add or subtract shims [3126.3] as required to obtain required clearance of a 0.025 to 0.076 mm (0.001 to 0.003 in.).
n) Pull rotor toward outboard end and install thrust bearing housing upper [3210.2] with dowel pins and 4 bolts. Tighten bolts.
o) Push rotor toward coupling end and verify the indicator again reads a 0.025 to 0.076 mm (0.001 to 0.003 in.). Adjust shims [3126.3] if necessary.

Note: It is essential that the setup is done correctly and accurately. Repeat the steps above.

Note: Record shim thickness after final set up is completed.

p) After balance disc clearance has been established and checked, push shaft towards the coupling end. Set indicator to zero.

q) Install the outboard shim [3126.3] and the support casing or bearing end cover [3266].
r) Push the rotor outboard. The indicator should read 0.46 to 0.61 mm (0.018 to 0.024 in.). This is the bearing clearance. If indicator shows less than 0.46 mm (0.018 in.) the shim [3126.3] will have to be made thinner. If the indicator shows greater than 0.61 mm (0.024 in.), a shim will have to be added.
s) After proper clearance is obtained, remove the bearing end cover [3266], shim [3126.3], outboard base ring, thrust bearing cap [3200.2] bearing nut [3712], "dummy" thrust bearing plate, and KTB assembly [3033].

6.9.10 Final thrust bearing assembly

a) Make sure shims [3126.3] and inboard base ring are in place.
b) Install regular thrust bearing plate [3610] which has an interference fit with the shaft [2100]. Regular thrust bearing plate must be heated to 175 ºC (350 ºF) before installing.

⚠ In the interest of operator safety when handling any heated parts, protective gloves or other suitable protection must be worn.

c) Install bearing nut [3712] and tighten. After allowing thrust bearing plate [3610] to cool ambient temperature. Re-tighten nut. Tighten setscrews in bearing nut to set.
d) Install the KTB assembly [3033]. Install thrust bearing cover [3200.2]. Install dowel pins and 4 capscrews and tighten.
e) Push rotor inboard toward coupling end. Re-check indicator reading. Indicator should still show a 0.025 to 0.076 mm (0.001 to 0.003 in.) reading.
f) Remove thrust bearing cover [3200.2].
g) Remove KTB assembly [3033].
h) Slide shim [3126.3] and base ring back against thrust bearing plate [3610] and install 2 of the 4 sets of Belleville springs [4263] and spring retainers in bearing housing [3200.2].
i) Slide shim [3126.3] and base ring up against bearing housing. Install KTB assembly [3033]. Install shim [3126.3].
j) Ensure bearing housing [3200.2] and bearing housing upper [3210.2] parting flange surfaces are clean. Coat flange with new gasket eliminator (Permatex).
k) In case bearing housings are sealed by labyrinth sleeves, install labyrinth sleeve [3709] with its circular joint ring [4595.1] into its position in thrust bearing housing.
l) Install the remaining 2 sets of Belleville springs [4263] and spring retainers into the thrust bearing housing upper [3210.2].
m) Carefully install the bearing housing upper [3210.2] onto the housing [3200.2]. Install capscrews to bolt bearing housing and bearing cap together. Torque to recommended value. (See Section 6.8.2, *Torque values*).

Note: Be sure springs [4263] and retainers do not fall out of the cover during assembly.

n) Install the outboard seal ring and shim [3126.5]
o) Ensure bearing housing [3200.2], bearing housing upper [3210.2] and bearing end cover [3266] surfaces are clean. Coat surfaces with new gasket eliminator (Permatex).
p) Install bearing end cover [3266]. Install capscrews and torque to recommended value. (See Section 6.8.2, *Torque values*).
q) Tighten outboard mechanical seal drive collar setscrews. Loosen setting plate bolting and remove seal spacers.
r) In case bearing housing is sealed by flingers, position flinger [2540] to bearing housing [3200.2]. Maintain a 0.76 mm (0.030 in.) gap between housing and flinger. Tighten setscrews.

⚠ CAUTION Mechanical seal spacer must be removed before start-up.

6.9.11 Final radial bearing assembly

a) Remove radial bearing cap [3210.1].
b) Ensure bearing housing [3200.1] and bearing cap [3210.1] parting flange surfaces are clean. Install labyrinth sleeves [3709] with their circular joint rings [4595.1] into their position in radial bearing housing [3200.1]. Coat flange with new gasket eliminator (Permatex). Assemble bearing cap [3210.1] to bearing housing [3200.1]. Install capscrews to bolt bearing housing and bearing cap together. Torque to recommended value. (See Section 6.8.2, *Torque values*).
c) In case bearing housings are sealed by flingers, position inboard flinger [2540] to bearing housing [3200.1]. Maintain a 0.76 mm (0.030 in.) gap between housing and flinger. Tighten setscrews.
d) Tighten inboard mechanical seal drive collar setscrews. Loosen setting plate bolting and remove seal spacers.

⚠ CAUTION Mechanical seal spacer must be removed before start-up.

6.10 Final pump assembly

a) Move pump and pedestal (assembly fixture) as a unit to the bedplate using the four lifting lugs located on pedestal (do not lift unit by the pump or nozzles).
b) Align pedestal onto bedplate.
c) Install the taper dowel pins in the four pedestal corner feet. Bolt all six pedestal feet to bedplate.
d) Replace all auxiliary piping, and probes, detectors, and electrical leads (bearing

housings) that were removed for dismantling purposes.

6.11 Coupling reassembly

a) Mount pump half coupling hub on pump shaft, draw up coupling lock nut [7411] and accurately mark its axial position on shaft, to establish its cold position. Then remove coupling hub from shaft [2100].
b) Accurately measure and mark the axial shift on shaft, for hot position. See chart below for axial shift dimension.

COUPLING AXIAL SHIFT DIMENSIONS	
Pump type	**Shift**
3X10WXH	0.45 mm (0.018 in.)
3X11WXH	0.48 mm (0.019 in.)
4X12WXH	0.61 mm (0.024 in.)
6X14WXH	0.83 mm (0.033 in.)

c) Heat pump half coupling hub uniformly to a temperature of 90 to 105 ºC (200 to 220 ºF), by immersing in rapidly boiling water, by furnace or by heating coil.

CAUTION Do not heat in oil or do not use a torch.

d) Mount pump half coupling hub on pump shaft before it has cooled more than 5 °C (10 ºF), pulling up to hot position marked on shaft [2100] by tightening coupling lock nut [7411]. Tighten setscrews in coupling lock nut.
e) Install spacer coupling.
f) Check coupling/shaft alignment as described in Section 4.
g) Install coupling guard and tighten bolting.

Fill lube system oil reservoir (refer to Section 5.2.1, *Lubrication*).

Refer to Sections 5.3, *Initial start-up procedure*, and Section 5.4, *Operating checks*.

7 FAULTS; CAUSES AND REMEDIES

FAULT SYMPTOM

Failure to deliver head and/or flow at start-up or during operation	Insufficient capacity and/or pressure	Pump loses prime after starting	Excessive vibration	Noise/Cavitation	Excessive discharge pressure pulsations	Driver overloaded	Pump stops abruptly	Mechanical seal leakage	Mechanical seal overheats or excessive	Pump overloads driver	High balance drum leakoff line pressure	PROBABLE CAUSES	POSSIBLE REMEDIES
●												Pump not completely filled with liquid	For low-temperature applications allow more cooling time for pump to reach fluid temperature. (At start-up only, see Start-Up procedures in Section 5, *Commissioning, start-up, operation and shutdown*).
●			●	●	●							Actual NPSH available is lower than specified NPSH requirement.	Check suction piping configuration. Minimum recommended length of straight piping before suction flange is 5 times the diameter of the suction piping. (Refer to Section 4, *Installation*).
●			●	●	●							Air leaks in suction line when operating under vacuum	Secure all vent connections. Check flanges for leakage.
●			●	●	●							Air/vapor pocket in suction line	Bleed line through vent connections.
●	●			●								Foreign material in suction line	Dismantle suction line and clear it of all foreign material, including suction strainer and isolation valve.
●	●											Reverse direction of rotation	Correct rotation is counter-clockwise when looking from coupling end of pump. Switch any two motor leads to change rotation. If turbine, contact turbine manufacturer.
●												Driver speed too low	Check power supply for correct frequency to motor.
													Check actual speed against rated speed listed on Pump Data Sheet (Section 10.1). If necessary, contact Flowserve office or driver manufacturer (and, if included, variable speed coupling manufacturer) for maintenance instructions.
●												Flow too low, causing overheating of the fluid and loss of NPSH after a short period of satisfactory operation	Check Pump Data Sheet (Section 10.1) or performance curve and adjust the system to the rated head-flow levels.
													If necessary, increase flow by installing a bypass line to a supply tank. Do not bypass directly to suction line.
													Increase NPSH available or reduce NPSH required.
●	●									●		Flow too high	Check Pump Data Sheet (Section 10.1) or performance curve and adjust the system to the rated head-flow levels
													Reduce flow
	●											Suction pressure less than required or speed too low	Open suction valve wide. Check power supply to motor for correct voltage.
●												Excessive recirculation from discharge to inlet	Check flow through bypass line. Adjust valves if necessary.

FAULT SYMPTOM

Failure to deliver head and/or flow at start-up or during operation	Insufficient capacity and/or pressure	Pump loses prime after starting	Excessive vibration	Noise/Cavitation	Excessive discharge pressure pulsations	Driver overloaded	Pump stops abruptly	Mechanical seal leakage	Mechanical seal overheats or excessive	Pump overloads driver	High balance drum leakoff line pressure	PROBABLE CAUSES	POSSIBLE REMEDIES
●						●						Viscosity and/or specific gravity of liquid higher than rated value	Check actual viscosity and/or specific gravity against the rated values listed on the Pump Data Sheet (Section 10.1). Adjust system if necessary.
●												Material buildup and/or clogged passageways and/or corrosion on surfaces adjacent to the impeller	Clear areas near impeller of all foreign material. Restore surfaces to smooth finish using emery cloth. Replace parts that cannot be restored (either due to severe corrosion or mechanical damage).
	●											Incorrect direction of rotation	Reconnect motor leads. If turbine-contact turbine manufacturer.
	●	●										Excessive amount of air or vapors in the fluid	Check suction system for air leakage and correct. Vent air. Tighten flange bolts.
	●	●										Foreign material in impeller(s)	Dismantle pump and remove any foreign material
	●	●										Foreign material in suction line	Dismantle suction line and remove foreign material
	●											Excessive high flow operation	Reduce flow.
		●										Insufficient water supply	Ensure that suction valve is wide open. Check for proper liquid level.
		●										Suction pipe clogged	Remove foreign material.
				●		●				●		Driver speed too high	Check power supply for correct frequency to motor. If turbine-check steam pressure to turbine. If necessary, contact Flowserve office or driver manufacturer (and, if included, variable speed coupling manufacturer) for maintenance instructions.
				●								Incorrect suction piping configuration creating undesirable flow patterns	Check suction piping configuration. Minimum recommended length of straight piping before suction flange is 5 times the diameter of the suction piping. (Refer to Section 4, *Installation*).
			●	●	●							Flow rate below recommended Minimum Continuous Stable Flow (MCSF)	Check Pump Data Sheet for recommended MCSF and adjust the system conditions to the rated head-flow levels. If necessary, increase pump discharge flow by installing a bypass line from discharge to a supply tank. Do not bypass directly to the suction line.
							●					Electrical failure in motor	Check power supply for correct frequency to motor. If necessary, contact Flowserve office or driver manufacturer (and, if included, variable speed coupling manufacturer) for maintenance instructions.
									●			Insufficient cooling water seal	Obstruction in seal water piping. Remove and clean.

FAULT SYMPTOM

Failure to deliver head and/or flow at start-up or during operation	Insufficient capacity and/or pressure	Pump loses prime after starting	Excessive vibration	Noise/Cavitation	Excessive discharge pressure pulsations	Driver overloaded	Pump stops abruptly	Mechanical seal leakage	Mechanical seal overheats or excessive	Pump overloads driver	High balance drum leakoff line pressure	PROBABLE CAUSES	POSSIBLE REMEDIES
									●		●	Worn balance drum	Dismantle and replace
										●		Pump bearings seize or rotating element binds	Dismantle pump and replace part or parts causing seizure or binding
●												Impeller damage	Remove and replace impeller.
●												Impeller or diffuser throat clogged with foreign material	Clear impeller or diffuser throat of all foreign material.
●												Impeller key sheared or missing from assembly	Disassemble and check impeller key. Remove and replace if damaged.
	●											Mechanical defects: wearing ring worn. Impeller damaged sheared impeller key	Dismantle pump and correct
		●										Broken or damaged coupling	Inspect and replace same.
						●	●					Rotor binds	Dismantle pump; inspect for mechanical damage; remove any foreign material from impeller/diffusor area. Restore surfaces to smooth condition. Use emery cloth.) Replace any damaged or severely corroded parts. Ensure that the rotor turns freely. Examine areas where rotating contact may occur, such as the impeller.
		●										Impeller unbalanced	Clear impeller. If problem persists, remove and rebalance.
		●				●						Driver shaft bent	Inspect the driver shaft as described in Section 6.7, *Inspection and renewal of parts*. If necessary, contact FLOWSERVE office or driver manufacturer for maintenance instructions.
						●						Mechanical/cavitation damage to the diffuser throat area causing excessive flow rates	Inspect diffuser throat area; cutwater must be radiused. Replace diffuser if the diffuser throat edge cannot be restored to original condition.
								●				Seal setting lost or incorrect	Refer to seal drawing or contact FLOWSERVE office for proper seal setting instructions.
								●				Worn or damaged seal	Disassemble seal and inspect for wear or damage. Check for the following: -Solid particles/dirt in seal -Rough, sticky, or irregular spring action of the seal faces. -Non-uniform wear patterns or cracks on seal faces. -Worn or damaged O-rings / gaskets.
								●				O-ring/gasket missing. Damaged, and/or incorrectly seated	Remove gland and properly install O-ring or gasket. Replace if damaged. Check chemical and temperature limits of the material.
								●				Gland studs incorrectly tightened, or gland not properly seated	Check studs for damage and tighten to proper torque value.
											●	Restriction in balancing line	Remove restriction.

DRAWING NO. 6X14WXH500XE119 | REV. 1

REVISIONS

REV.	DESCRIPTION	ECO No	DATE	REF. ZONE	REV D.	CHKD	APPVL
0	INITIAL USSUE	–	10.9.04	–	J.I.C.	M.H.	L.Q.
1	INCLUDED CUSTOMER COMMENTS	–	25.10.04	–	J.I.C.	M.H.	L.Q.

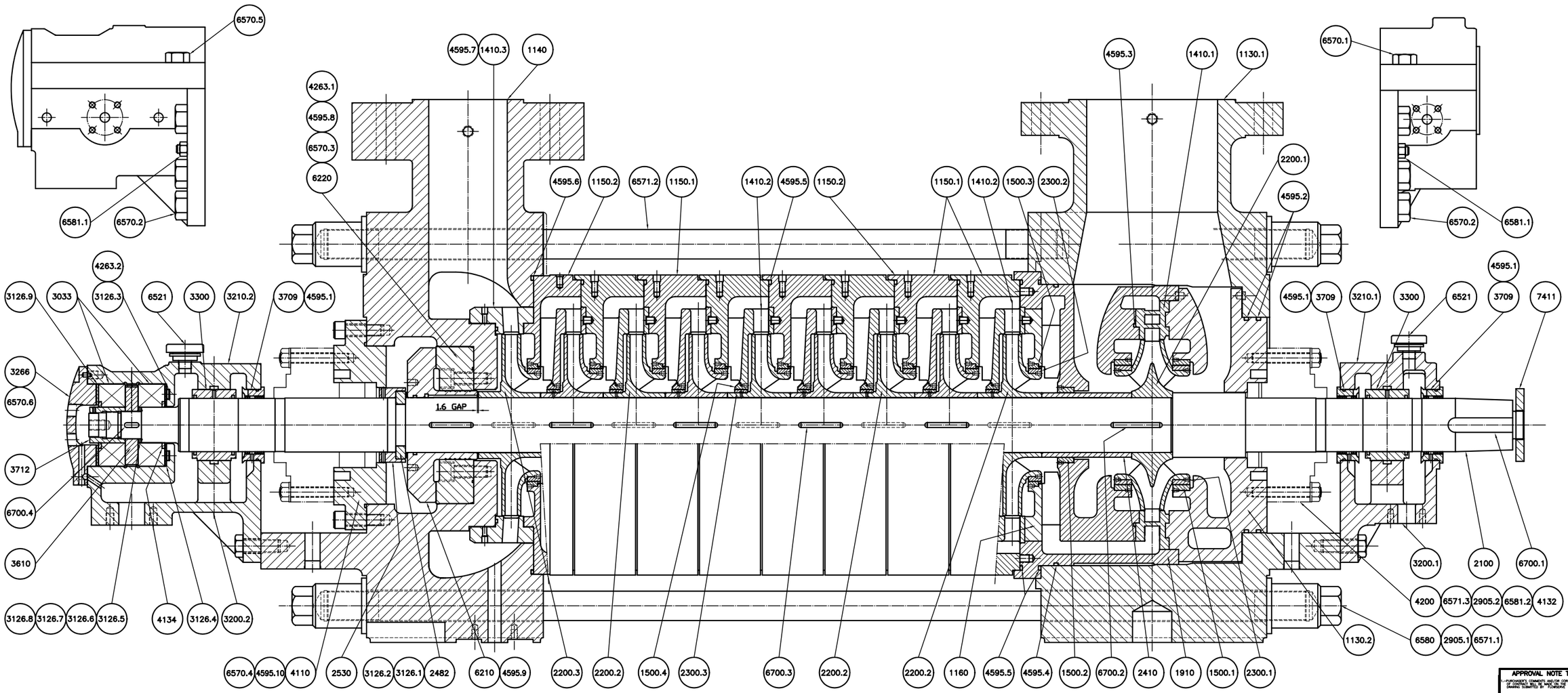

EUROPUMP CODE	QTY.	EUROPUMP DESCRIPTION	MATERIAL
3210.2	1	BEARING HOUSING UPPER	ASTM A216 GR.WCB
3210.1	1	BEARING HOUSING UPPER	ASTM A216 GR.WCB
3200.2	1	BEARING HOUSING LOWER	ASTM A216 GR.WCB
3200.1	1	BEARING HOUSING LOWER	ASTM A216 GR.WCB
3126.9	1	SHIM – SINGLE THRUST BRG./BRG END COVER	F–1120 UNE 36011
3126.5.6.7,8	1SET	SHIM–THRUST BEARING PLATE	ASTM A109
3126.4	1	SHIM – SINGLE THRUST BRG./BRG. HOUSING	F–1120 UNE 36011
3126.3	4	SHIM – SPRING PLATE	F–1120 UNE 36011
3126.2	1SET	SHIM – BALANCE DISC	AISI–304
3126.1	1SET	SHIM – BALANCE DISC	AISI–304
3033	1	SINGLE THRUST BEARING	–
2905.2	8	WASHER	AISI–316
2905.1	26	WASHER	C–1141
2530	1	RETAINING RING	ASTM A582 T.416
2482	1	RETAINING RING SLEEVE	ASTM A582 T.416
2410	1	INTERSTAGE SLEEVE	AISI–420 (LASER HARDENED)
2300.3	8	IMPELLER WEAR RING	AISI–420 (LASER HARDENED)
2300.2	9	IMPELLER WEAR RING	AISI–420 (LASER HARDENED)
2300.1	2	IMPELLER WEAR RING	AISI–420 (LASER HARDENED)
2200.3	1	IMPELLER LAST STAGE	ASTM A487 CA6NM
2200.2	8	IMPELLER 2ND. TO 9TH. STAGE	ASTM A487 CA6NM
2200.1	1	IMPELLER 1ST. STAGE	ASTM A487 CA6NM
2100	1	SHAFT	ASTM A276 T.410 COND.T
1910	1	INLET RING	ASTM A487 CA6NM
1500.4	8	CASING WEAR RING	ASTM A582 T.416
1500.3	9	CASING WEAR RING	ASTM A582 T.416
1500.2	1	CASING WEAR RING	ASTM A582 T.416
1500.1	2	CASING WEAR RING	ASTM A582 T.416
1410.3	1	DIFFUSER LAST STAGE	ASTM A487 CA6NM
1410.2	8	DIFFUSER 2ND. TO 9TH. STAGE	ASTM A487 CA6NM
1410.1	1	DIFFUSER 1ST. STAGE	ASTM A487 CA6NM
1160	1	STAGE CASING	ASTM A487 CA6NM
1150.2	1	STAGE CASING LAST	ASTM A487 CA6NM
1150.1	7	STAGE CASING 2ND. & 8TH. STAGE	ASTM A487 CA6NM
1140	1	DISCHARGE CASING	ASTM A217 WC6
1130.2	1	SUCTION CASING (INTERNAL)	ASTM A217 WC6
1130.1	1	SUCTION CASING	ASTM A217 WC6

EUROPUMP CODE	QTY.	EUROPUMP DESCRIPTION	MATERIAL
6700.1	1	KEY	AISI–410
6581.2	8	HEXAGON NUT	AISI–316
6581.1	4	HEXAGON NUT	F–1120 UNE 36011
6580	26	NUT	ASTM A194 GR.2H
6571.3	8	TIE BOLT	AISI–316
6571.2	2	TIE BOLT	ASTM A193 GR.B7
6571.1	12	TIE BOLT	ASTM A193 GR.B7
6570.6	8	SCREW	F–1140 UNE 36011
6570.5	8	SCREW	ASTM A193 GR.B7
6570.4	12	SCREW	AISI–410
6570.3	12	SCREW	AISI–410
6570.2	12	SCREW	ASTM A193 GR.B7
6570.1	4	SCREW	ASTM A193 GR.B7
6521	2	VENT PLUG	CARBON STEEL
6220	1	COUNTER BALANCE DISC	ASTM A582 T.416
6210	1	BALANCE DISC	ASTM A582 T.416
4595.10	1	JOINT RING CIRCULAR	ETYLEN PROPIL.
4595.9	1	JOINT RING CIRCULAR	ETYLEN PROPIL.
4595.8	1	JOINT RING CIRCULAR	ETYLEN PROPIL.
4595.7	1	JOINT RING CIRCULAR	ETYLEN PROPIL.
4595.6	1	JOINT RING CIRCULAR	ETYLEN PROPIL.
4595.5	9	JOINT RING CIRCULAR	ETYLEN PROPIL.
4595.4	1	JOINT RING CIRCULAR	ETYLEN PROPIL.
4595.3	1	JOINT RING CIRCULAR	ETYLEN PROPIL.
4595.2	2	JOINT RING CIRCULAR	ETYLEN PROPIL.
4595.1	3	JOINT RING CIRCULAR	BUNA–N
4263.2	4	SPRING PLATE	AISI–1075
4263.1	12	SPRING PLATE	AISI–316
4200	2	MECHANICAL SEAL	–
4134	2	LANTERN RING	ASTM B505 C93200
4132	2	STUFFING BOX NECK BUSH	–
4110	1	STUFFING BOX HOUSING	ASTM A217 WC6
3712	1	BEARING NUT	F–1140 UNE 36011
3709	3	LABYRINTH DISC	ASTM B308 GR.6061 T6
3610	1	THRUST BEARING PLATE	F–1140 UNE 36011
3300	2	BEARING BUSH	STEEL/BABBITT
3266	1	BEARING END COVER	ASTM A216 GR.WCB

EUROPUMP CODE	QTY.	EUROPUMP DESCRIPTION	MATERIAL
7411	1	COUPLING LOCK NUT	F–1140 UNE 36011
6700.4	1	KEY	AISI–410
6700.3	10	KEY	AISI–410
6700.2	1	KEY	AISI–410

READ INSTRUCTION MANUAL BEFORE ATTEMPTING TO DISASSEMBLE, ASSEMBLE OR OPERATE PUMP.

APPROVAL NOTE TO CUSTOMER

1.–PURCHASER'S COMMENTS AND/OR CORRECTIONS, WITHIN THE SCOPE OF CONTRACT, WILL BE MADE ON THE FIRST COMPLETED CERTIFIED DRAWING SUBMITTED BY FLOWSERVE CORPORATION AND RETURNED.

2.–CORRECTIONS, ALTERNATIONS, ADDITIONS AND MODIFICATIONS OUTSIDE SCOPE OF CONTRACT OR MADE AFTER FIRST SUBMITTAL MAY REQUIRE AN ADDITIONAL ENGINEERING SERVICE CHARGE.

3.–ITEMS INTERNATIONALLY APPROVED OR BTO DEFERRED APPROVAL BY PURCHASER, MUST BE SPECIFICALLY STATED OTHERWISE DELIVERY MAY BE AFFECTED.

PROPRIETARY NOTE

P.O. NUMBER:	LOI A–4526/AT/at	FLOW:	350 m3/h
END USER:	PPC	HEAD:	1430 m
JOB:	Lavrion V	BHP:	1539 Kw
PLANT:	Lavrion V CCPP	EFFICIENCY:	⚠ 82,9 %
UNIT:	V	RPM:	2905
SERVICE:	HP BOILER FEED WATER ⚠	FLUID:	B.F.W.
ITEM:	5 LAC 30/40 AP001	TEMPERATURE:	128,2 °C
SERIAL No.:	M–149448 / M–149449	S.G.:	0,9361
	CUSTOMER INFORMATION		OPERATING CONDITIONS

1st Angle Projection

STATUS OF APPROVAL

ORDER No.

DRAWN BY	J.I.CABALLO	DATE 10.9.04
CHECKED BY	M.HDEZ.	DATE 10.9.04
APPROVED BY	L.QUIROS	DATE 10.9.04

FLOWSERVE Pump Division Coslada Operations

DWG TITLE **SECTIONAL DRAWING**
PUMP TYPE 6X14WXH–10

SIZE	DRAWING NO.	REV.
A1	6X14WXH500XE119	1
	FILE CAD.: W102335	

SCALE NTS | UNITS | SHEET NO. 1/1 | n/p

REV	DATE	PREP.	REVISED	APPRVD	ISSUED FOR
1	25.10.04	J.I.C.	M.H.	L.Q.	INCLUDED CUSTOMER COMMENTS
0	10.9.04	J.I.C.	M.H.	L.Q.	INITIAL ISSUE

PUBLIC POWER CORPORATION — LAVRION V CC PP — DMKT 11 21 302

METKA

Sectional Drawing
6X14WXH–10 (5LAC 30/40 AP001)

FLOWSERVE

METKA DWG.No.		DIN A1	
KKS DWG.No.	5–LAC–MDP–FPD–224	SCALE	"–"
EA DWG.No.		SHEET 1 OF 1	

Contains information for the design of structures, systems and components..... YES ■ NO ■
VERIFICATOR NR ■ JUDGE ■ VERIFIER NR ■ NO ■

DOCUMENT PREPARED WITH CAD DO NOT MODIFY MANUALLY

DRAWING NO. 6X14WXH86XE120-2 | REV. 2

REVISIONS

REV.	DESCRIPTION	ECO No	DATE	REF. ZONE	REV'D	CHK'D	APPV'L
0	INITIAL USSUE	–	2.7.04	–	J.I.C.	M.M.	L.Q.
1	REVISED & INCLUDED CUSTOMER COMMENTS	–	16.9.04	–	J.I.C.	M.M.	L.Q.
2	INCLUDED CUSTOMER COMMENTS	–	25.10.04	–	J.I.C.	M.M.	L.Q.

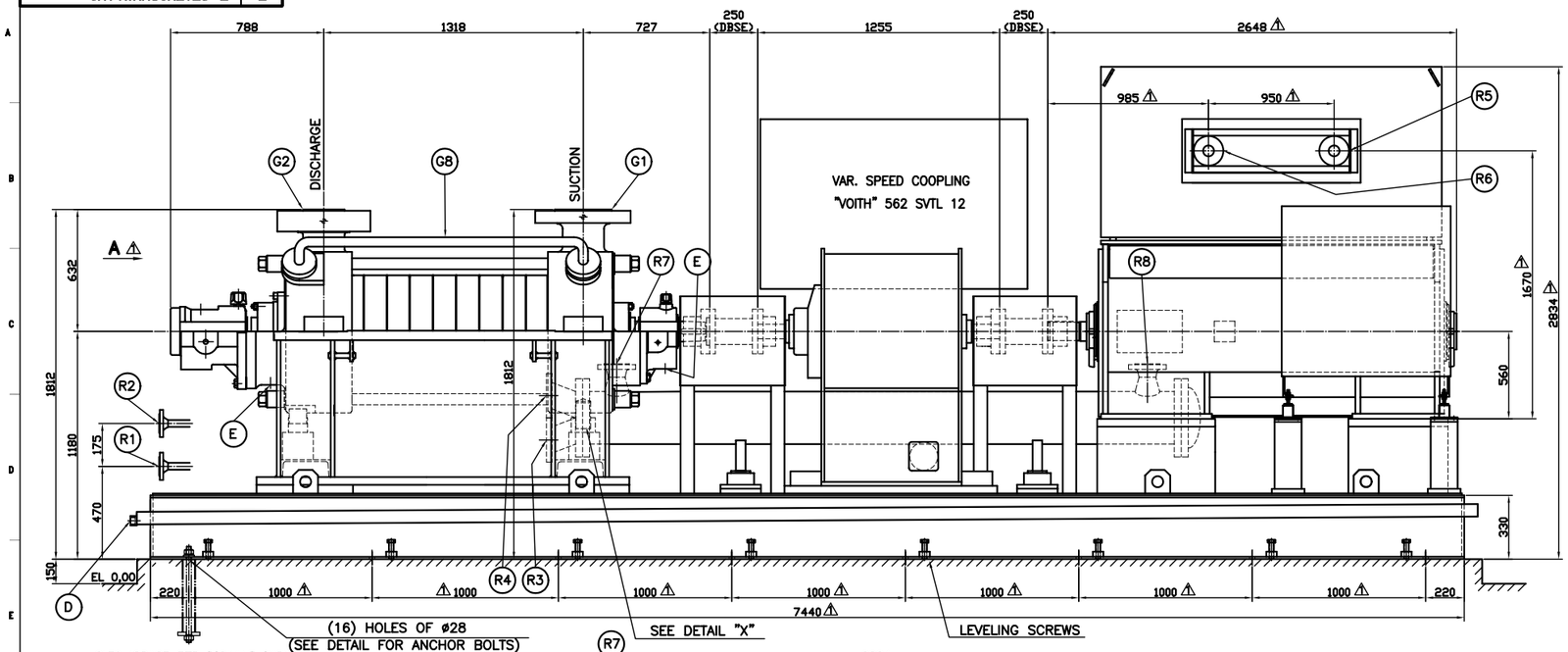

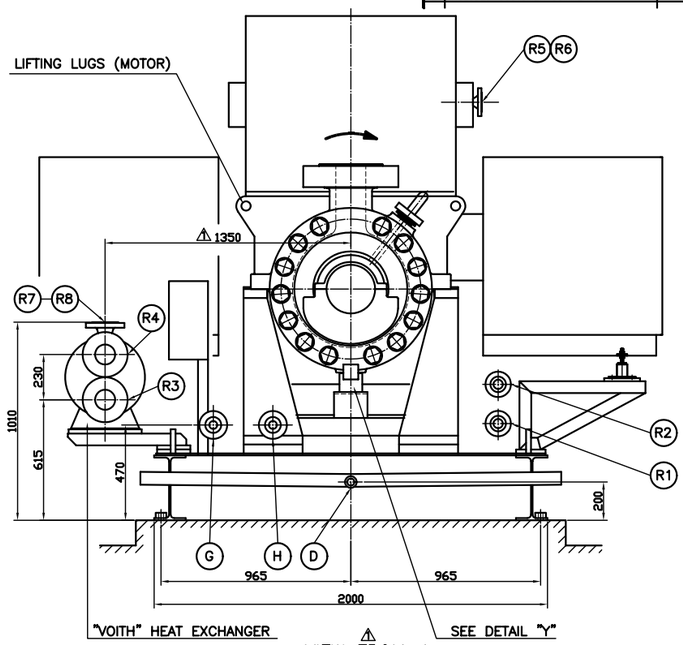

VIEW FROM–A △1

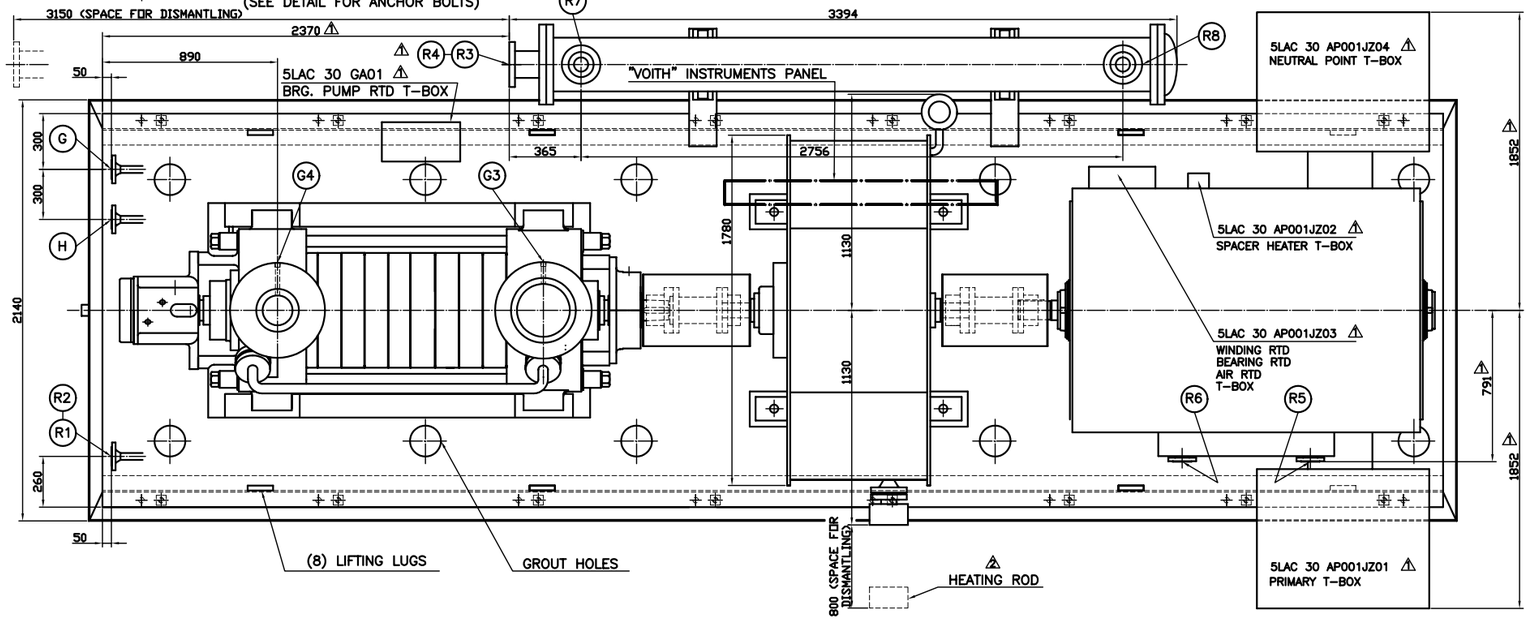

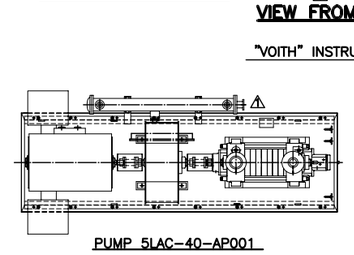

PUMP 5LAC–40–AP001
(SEE DRAW. 6X14WXH86XE120/1)

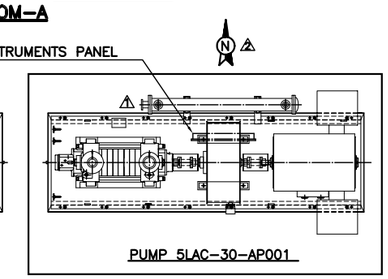

PUMP 5LAC–30–AP001

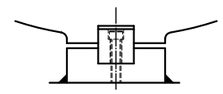

DETAIL "Y"
PUMP KEY BLOCK
(REFER TO GENERAL NOTES FOR DETAILS)

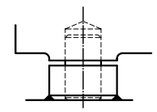

DETAIL "X"
PUMP PIN BLOCK
(REFER TO GENERAL NOTES FOR DETAILS)

REF. DOCUMENT: LN–6X14WXH86XE120

P.O. NUMBER:	LOI A–4526/AT/at	FLOW:	350 m3/h
END USER:	PPC	HEAD:	1430 m
JOB:	Lavrion V	BHP:	1539 Kw
PLANT:	Lavrion V CCPP	EFFICIENCY:	△2 82,9 %
UNIT:	V	RPM:	2905
SERVICE:	HP BOILER FEED WATER △2	FLUID:	B.F.W.
ITEM:	5 LAC 30 AP001	TEMPERATURE:	128,2 °C
SERIAL No.:	M–149449	S.G.:	0,9361
CUSTOMER INFORMATION		OPERATING CONDITIONS	

1st Angle Projection

STATUS OF APPROVAL

ORDER No.

DRAWN BY	J.I.CABALLO	DATE 2.7.04
CHECKED BY	M.MERONO	DATE 2.7.04
APPROVED BY	L.QUIROS	DATE 2.7.04

FLOWSERVE Pump Division Cosladа Operations

DWG TITLE **GENERAL ARRANGEMENT**
PUMP TYPE 6X14WXH–10

SIZE	DRAWING NO.	REV.
A1	6X14WXH86XE120–2	2
	FILE CAD.: W102147	

SCALE NTS | UNITS | SHEET NO. 2/2 | n/p

PUBLIC POWER CORPORATION — LAVRION V CC PP — DMKT 11 21 302

REV	DATE	PREP.	REVISED	APPRVD	ISSUED FOR
2	25.10.04	J.I.C.	M.M.	L.Q.	INCLUDED CUSTOMER COMMENTS
1	16.9.04	J.I.C.	M.M.	L.Q.	REVISED & INCLUDED CUSTOMER COMMENTS
0	2.7.04	J.I.C.	M.M.	L.Q.	INITIAL ISSUE

METKA — **General Arrangement Drawing**
6X14WXH–10 (5LAC 30 AP001)

FLOWSERVE

METKA DWG.No.	DIN A1
KKS DWG.No. 5–LAC–MDA–FPD–201	SCALE "–"
EA DWG.No.	SHEET 2 OF 2

Contains information for the design of structures, systems and components..... YES ■ NO ■
VERIFICATION NM ■ JUDGM ■ VERIFIER NM ■ NO ■
DOCUMENT PREPARED WITH CAD DO NOT MODIFY MANUALLY

PUMP DATA

TYPE	6X14WXH
NUMBER OF STAGES	10
ROTATION:	CCW – HI
R. P. M.	2905
SUCTION NOZZLE	10" ASME B16.5 CL.600 R.F.
DISCHARGE NOZZLE	6" ASME B16.5 CL.1500 R.F.

MOTOR DATA △1

SUPPLIED BY	FLOWSERVE
MANUFACTURER	TECO WESTINGHOUSE
TYPE	AECW–S2002
POWER	1750 Kw
SPEED	3000 RPM
VOLTAGE	6 Kv
ENCLOSURE	IP 55

MAXIMUM ALLOWABLE NOZZLE LOADS

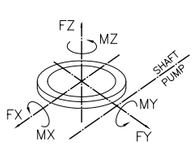

SUCTION

FX = 5340 N	MX = 5020 Nm
FY = 4450 N	MY = 2440 Nm
FZ = 6670 N	MZ = 3800 Nm
FR = 9630 N	MR = 6750 Nm

DISCHARGE

FX = 2490 N	MX = 2300 Nm
FY = 2050 N	MY = 1180 Nm
FZ = 3110 N	MZ = 1760 Nm
FR = 4480 N	MR = 3130 Nm

ISO 1503 CONVENTION

NOZZLES DIMENSIONS

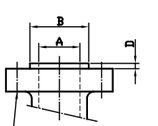

(E) HOLES, OF ø F
C BOLTS CIRCLE

	SUCTION (G1) 10"–ANSI,CL600 R.F.	DISCHARGE (G2) 6"–ANSI,CL1500 R.F.
A	254	152,5
B	324	216
C	432	317,5
D	6,4	6,4
E	16	12
F	35	38

ANCHOR BOLT DETAIL

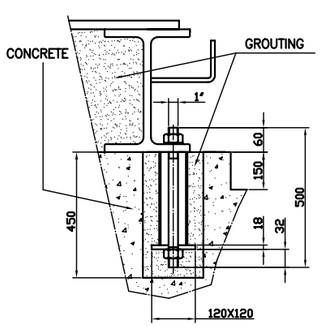

ANCHOR BOLT RECOMMENDED MATERIAL:
CARBON STEEL (ASTM A307 Gr.B)

APPROXIMATE WEIGHTS △1

PUMP	4700 Kg.
MOTOR	7600 Kg.
VAR. SPEED	1010 Kg.
BASEPLATE	6100 Kg.
HEAT EXCHANGER	645 Kg.
ACCESORIES	600 Kg.
TOTAL	20655 Kg.

TOLERANCES

NOZZLES AND CONNECTIONS
LINEAL: ±6
ANGULAR: ±1° IN ANY DIRECTION
OTHER DIMENSIONS : ±1%
DIMENSIONS ARE IN MILLIMETERS

AUXILIARY CONNECTIONS

D	BASEPLATE DRAIN	1" NPT
E	BEARING BRACKET DRAIN	1" NPT
G	DISCHARGE HEAD DRAIN	1"–ANSI,1500#R.F.
H	WARMING	1–1/2",ANSI,1500#R.F.
G3	SUCTION MANOMETER	1/2"NPT
G4	DISCHARGE MANOMETER	1/2"NPT
G8	BALANCE LINE	1–1/2",ANSI,900#R.F.
R1	COOLING WATER INLET	1"–ANSI,150#R.F.
R2	COOLING WATER OUTLET	1"–ANSI,150#R.F.
R3	HEAT EXCHANGER WATER INLET	4"–ANSI,150#R.F.
R4	HEAT EXCHANGER WATER OUTLET	4"–ANSI,150#R.F.
R5	MOTOR COOLING WATER INLET	2–1/2"–ANSI,150#R.F. △1
R6	MOTOR COOLING WATER OUTLET	2–1/2"–ANSI,150#R.F. △1
R7	HEAT EXCHANGER OIL INLET	3"–ANSI,150#R.F.
R8	HEAT EXCHANGER OIL OUTLET	3"–ANSI,150#R.F.

DRAWING NO.	REV.
6X14WXH86XE120-1	2

REVISIONS

REV.	DESCRIPTION	ECO No	DATE	REF. ZONE	REV D	CHKD	APPVL
0	INITIAL USSUE	–	2.7.04	–	J.I.C.	M.M.	L.Q.
1	REVISED & INCLUDED CUSTOMER COMMENTS	–	16.9.04	–	J.I.C.	M.M.	L.Q.
2	INCLUDED CUSTOMER COMMENTS	–	25.10.04	–	J.I.C.	M.M.	L.Q.

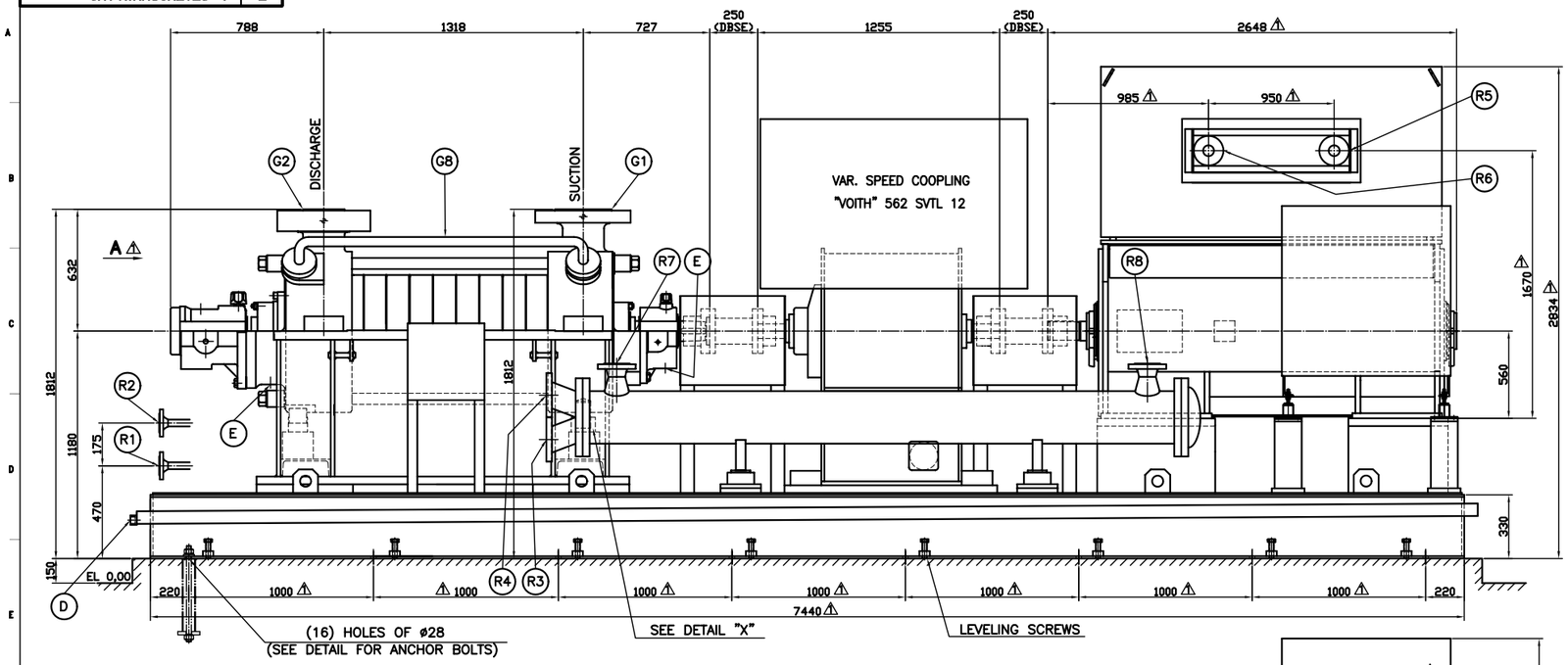

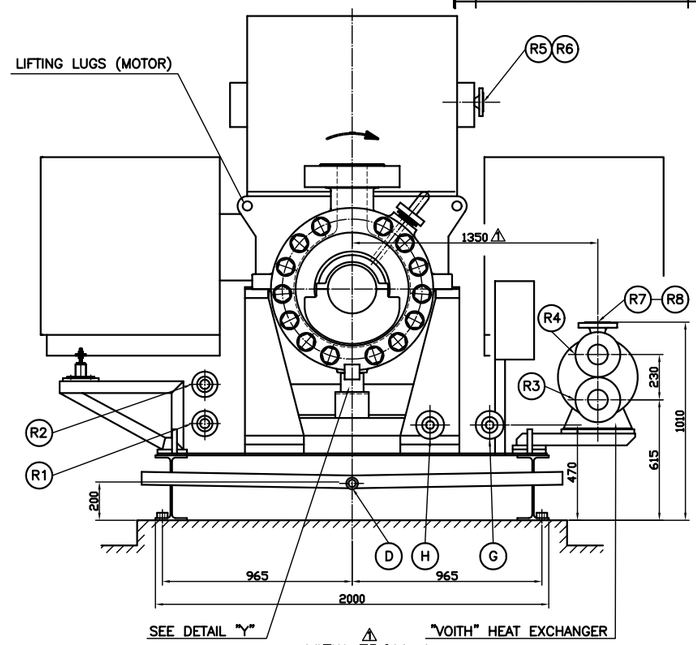

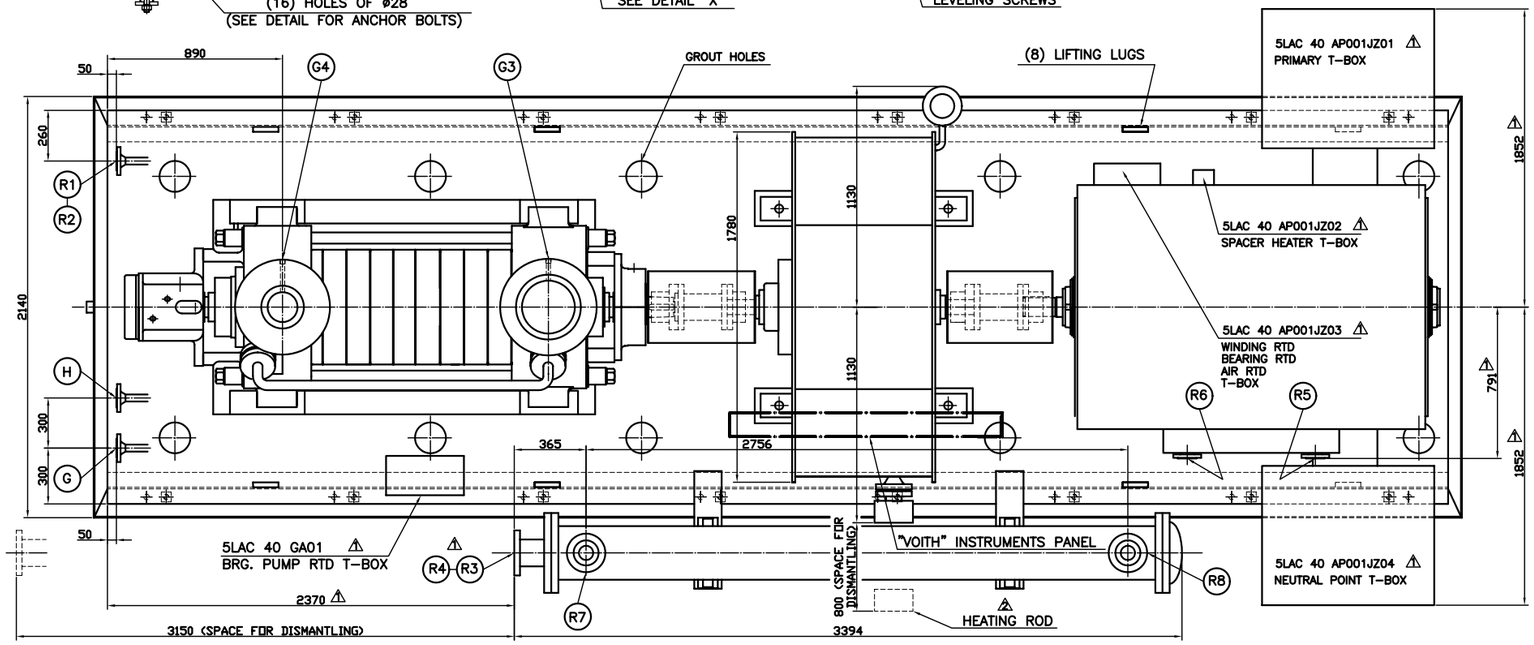

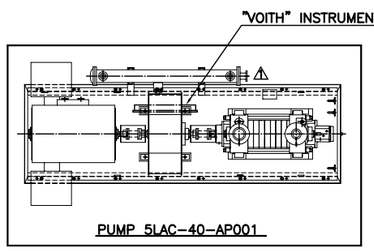

PUMP 5LAC–40–AP001

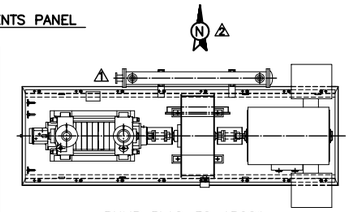

PUMP 5LAC–30–AP001
(SEE DRAW. 6X14WXH86XE120/2)

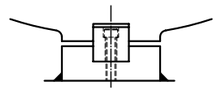

DETAIL "Y"
PUMP KEY BLOCK
(REFER TO GENERAL NOTES FOR DETAILS)

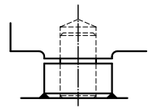

DETAIL "X"
PUMP PIN BLOCK
(REFER TO GENERAL NOTES FOR DETAILS)

REF. DOCUMENT: LN–6X14WXH86XE120

APPROVAL NOTE TO CUSTOMER

1.–PURCHASER'S COMMENTS AND/OR CORRECTIONS, WITHIN THE SCOPE OF CONTRACT, WILL BE TAKEN ON SUPPLIED COMPUTERS, REVISED DRAWING SUBMITTED BY FLOWSERVE CORPORATION AND RETURNED.

2.–CORRECTIONS, ALTERNATIVES, ADDITIONS AND MODIFICATIONS OUTSIDE SCOPE OF CONTRACT OR WHAT, AFTER FIRST SUBMITTAL, MAY REQUIRE NO ADDITIONAL ENGINEERING SERVICE CHARGE.

3.–ITEMS CONDITIONALLY APPROVED BY REVISED DRAWING, BY PURCHASER, MUST BE SPECIFICALLY STATED OTHERWISE DELIVERY MAY BE EFFECTED.

PROPRIETARY NOTE

THIS MATERIAL IS THE PROPERTY OF FLOWSERVE INTERNATIONAL INC. AND IS FURNISHED ONLY FOR THE PURPOSE REQUESTED. THE RIGHTS TO USE THIS MATERIAL FOR ANY OTHER PURPOSE, AND TO REPRODUCE THE MATERIAL IN WHOLE OR IN PART, ARE RESERVED EXCLUSIVELY TO FLOWSERVE. THE RIGHTS TO USE AND/OR MANUFACTURE AND/OR FOR SALE THE SUBJECT MATTER SHOWN HEREIN OR FOR THE CONSIDERATION OF THE SUBJECT MATTER SHOWN HEREIN, BY USE OF THE CONSIDERATION OF THIS MATERIAL, IS NOT GRANTED EXCEPT TO THE EXTENT SPECIFICALLY AGREED TO BY SPECIFIC AUTHORIZATION IN WRITING BY FLOWSERVE OR A FLOWSERVE OR OTHER AUTHORIZED AGENT OF FLOWSERVE CO. CORPORATION OR SUBSIDIARIES.

P.O. NUMBER:	LOI A–4526/AT/at	FLOW:	350 m3/h
END USER:	PPC	HEAD:	1430 m
JOB:	Lavrion V	BHP:	1539 Kw
PLANT:	Lavrion V CCPP	EFFICIENCY:	82,9 %
UNIT:	V	RPM:	2905
SERVICE:	HP BOILER FEED WATER	FLUID:	B.F.W.
ITEM:	5 LAC 40 AP001	TEMPERATURE:	128,2 °C
SERIAL No.:	M–149448	S.G.:	0,9361
CUSTOMER INFORMATION		OPERATING CONDITIONS	

1st Angle Projection

STATUS OF APPROVAL		
ORDER No.		
DRAWN BY J.I.CABALLO	DATE 2.7.04	
CHECKED BY M.MERONO	DATE 2.7.04	
APPROVED BY L.QUIROS	DATE 2.7.04	

FLOWSERVE Pump Division Coslada Operations

DWG TITLE **GENERAL ARRANGEMENT**
PUMP TYPE 6X14WXH–10

SIZE	DRAWING NO.	REV.
A1	6X14WXH86XE120–1	2
	FILE CAD.: W102146	
SCALE NTS	UNITS	SHEET NO. 1/2 n/p

PUBLIC POWER CORPORATION — LAVRION V CC PP — DMKT 11 21 302

REV	DATE	PREP.	REVISED	APPRVD	ISSUED FOR
2	25.10.04	J.I.C.	M.M.	L.Q.	INCLUDED CUSTOMER COMMENTS
1	16.9.04	J.I.C.	M.M.	L.Q.	REVISED & INCLUDED CUSTOMER COMMENTS
0	2.7.04	J.I.C.	M.M.	L.Q.	INITIAL ISSUE

Contains information for the design of structures, systems and components..... YES ■ NO ■
VERIFICATION: N/A ■ JUO/SUR ■ VERIFIER INT ■ NO ■
DOCUMENT PREPARED WITH CAD DO NOT MODIFY MANUALLY

METKA — **General Arrangement Drawing**
6X14WXH–10 (5LAC 40 AP001)

FLOWSERVE — METKA DWG.No. — DIN A1 — KKS DWG.No. 5–LAC–MDA–FPD–201 — SCALE "–" — EA DWG.No. — SHEET 1 OF 2

PUMP DATA

TYPE	6X14WXH
NUMBER OF STAGES	10
ROTATION:	CCW – HI
R. P. M.	2905
SUCTION NOZZLE	10" ASME B16.5 CL.600 R.F.
DISCHARGE NOZZLE	6" ASME B16.5 CL.1500 R.F.

MOTOR DATA

SUPPLIED BY	FLOWSERVE
MANUFACTURER	TECO WESTINGHOUSE
TYPE	AECW–S2002
POWER	1750 Kw
SPEED	3000 RPM
VOLTAGE	6 Kv
ENCLOSURE	IP 55

MAXIMUM ALLOWABLE NOZZLE LOADS

SUCTION

FX = 5340 N MX = 5020 Nm
FY = 4450 N MY = 2440 Nm
FZ = 6670 N MZ = 3800 Nm
FR = 9630 N MR = 6750 Nm

DISCHARGE

FX = 2490 N MX = 2300 Nm
FY = 2050 N MY = 1180 Nm
FZ = 3110 N MZ = 1760 Nm
FR = 4480 N MR = 3130 Nm

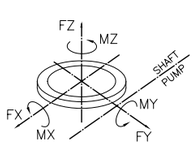

ISO 1503 CONVENTION

NOZZLES DIMENSIONS

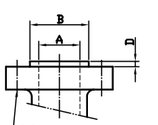

(E) HOLES, OF ø F
C BOLTS CIRCLE

	SUCTION (G1) 10"–ANSI,CL600 R.F.	DISCHARGE (G2) 6"–ANSI,CL1500 R.F.
A	254	152,5
B	324	216
C	432	317,5
D	6,4	6,4
E	16	12
F	35	38

ANCHOR BOLT DETAIL

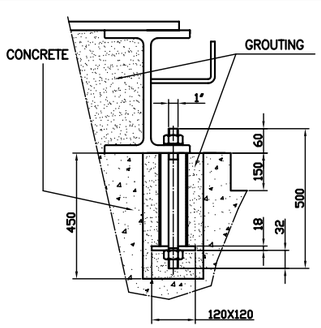

ANCHOR BOLT RECOMMENDED MATERIAL:
CARBON STEEL (ASTM A307 Gr.B)

APPROXIMATE WEIGHTS

PUMP	4700 Kg.
MOTOR	7600 Kg.
VAR. SPEED	1010 Kg.
BASEPLATE	6100 Kg.
HEAT EXCHANGER	645 Kg.
ACCESORIES	600 Kg.
TOTAL	20655 Kg.

TOLERANCES

NOZZLES AND CONNECTIONS
LINEAL: ±6
ANGULAR: ±1° IN ANY DIRECTION
OTHER DIMENSIONS : ±1%
DIMENSIONS ARE IN MILLIMETERS

AUXILIARY CONNECTIONS

D	BASEPLATE DRAIN	1" NPT
E	BEARING BRACKET DRAIN	1" NPT
G	DISCHARGE HEAD DRAIN	1"–ANSI,1500#R.F.
H	WARMING	1–1/2"ANSI,1500#R.F.
G3	SUCTION MANOMETER	1/2"NPT
G4	DISCHARGE MANOMETER	1/2"NPT
G8	BALANCE LINE	1–1/2"ANSI,900#R.F.
R1	COOLING WATER INLET	1"–ANSI,150#R.F.
R2	COOLING WATER OUTLET	1"–ANSI,150#R.F.
R3	HEAT EXCHANGER WATER INLET	4"–ANSI,150#R.F.
R4	HEAT EXCHANGER WATER OUTLET	4"–ANSI,150#R.F.
R5	MOTOR COOLING WATER INLET	2–1/2"–ANSI,150#R.F.
R6	MOTOR COOLING WATER OUTLET	2–1/2"–ANSI,150#R.F.
R7	HEAT EXCHANGER OIL INLET	3"–ANSI,150#R.F.
R8	HEAT EXCHANGER OIL OUTLET	3"–ANSI,150#R.F.

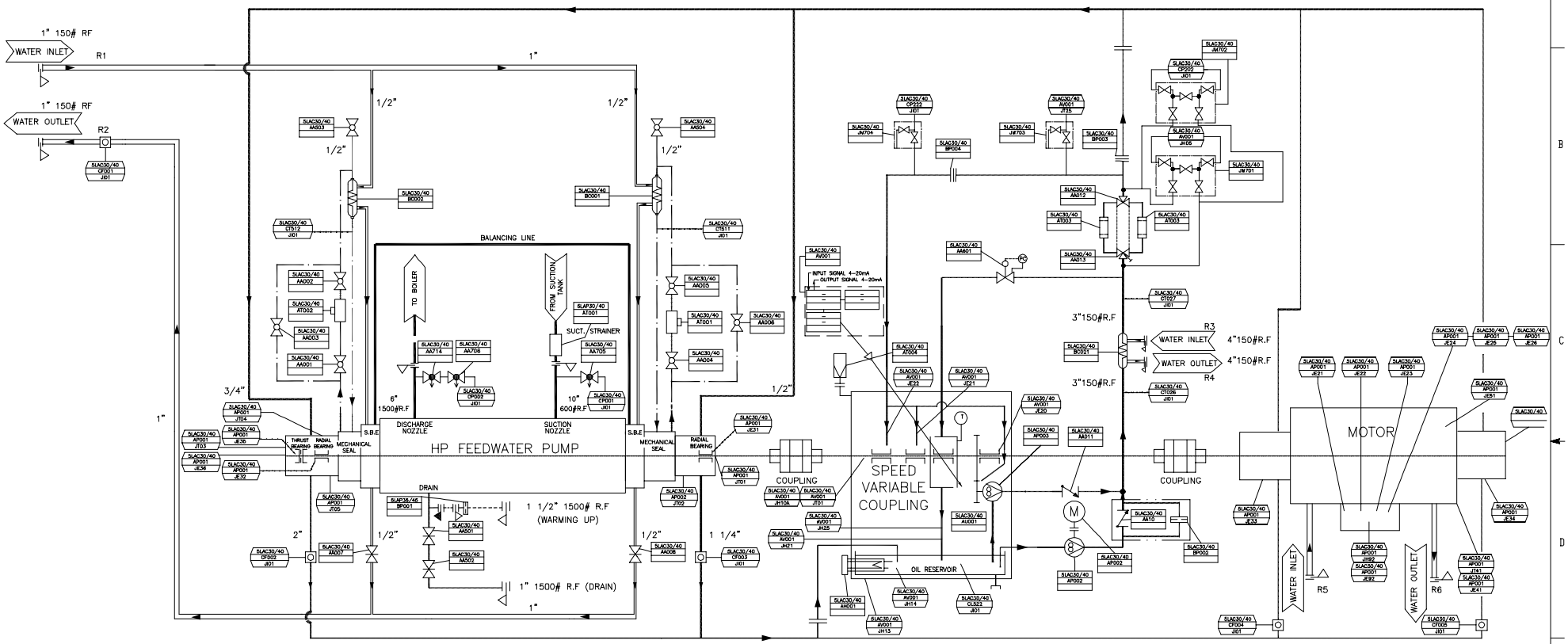

DESCRIPTIONS:

1.- FUNCTION SYMBOL:

(I) LOCAL INDICATION
I REMOTE INDICATION

AA — VALVE
AT — MAGNETIC SEPARATOR
BC — HEAT EXCHANGER
CF — FLOW INDICATOR
CP — PRESSURE INDICATOR
CT — THERMO ELEMENT/INDICATOR
CV — VIBRATION TRANSMITTER
PDS — DIFF.PRESS.SWITCH
EM — ELECTRICAL MOTOR
CC — POSITION CONTROL
GP — GEAR PUMP
GS — POSITION SWITCH
LI — LEVEL INDICATOR
LS — LEVEL SWITCH
MD — MANIFOLD
PS — PRESSURE SWITCH
RO — RESTRICTION ORIFICE
S — SPEED SENSOR
SE — SPEED TRANSDUCER
SI — SPEED INDICATOR
T — FUSE PLUG
TS — THERMO SWITCH
VF — VENT FILTER

LEGEND

FEED WATER PIPING
OIL PIPING
COOLING WATER PIPING
DRAIN PIPING
SEALING WATER PIPING
TEMPERATURE LINE
SUPPLIED BY OTHERS
SUPPLIED BY FLOWSERVE
INSTRUMENT
VALVE/COMPONENT

CUSTOMER: METKA
USER: PPC
PROJECT: LAVRION V
FLOWSERVE REF.:—
PUMP: 6X14WXH-1D
SERVICE: H.P. BOILER FEED WATER PUMPS
TAG Nº: 5LAC30/40 AP001

METKA

REV.	MODIFICATION	DATE	DRW.	CHK.	APPR.
B	CHANGING TAGS	18.10.04	N.O	M.A.P	M.M.
A	ADDING OIL SYSTEM IN MOTOR BEARING	27.07.04	N.O	M.A.P	M.M.
0	FIRST ISSUE	01.04.04	N.O	M.A.P	M.M.

CAD DRAWING — MANUAL MODIFICATIONS ARE NOT ALLOWED —

FLOWSERVE

PUMP DIVISION
COSLADA PLANT
MADRID

DERIVED FROM : —
CERTIFIED FOR :

DRAWN : N.O.Z	DATE : 01.04.04	TITLE : PIPING & INSTRUMENTATION DIAGRAM
CHECKED : M.A.P	DATE : 01.04.04	
APPROVED : M.M.	DATE : 01.04.04	CAD.REF. — / DRAWING N. — / B
SCALE :	WEIGHT :	

FORMATO ORIGINAL A2 (594 x 420)

0 100 200 mm

NO: 949407 REV: A

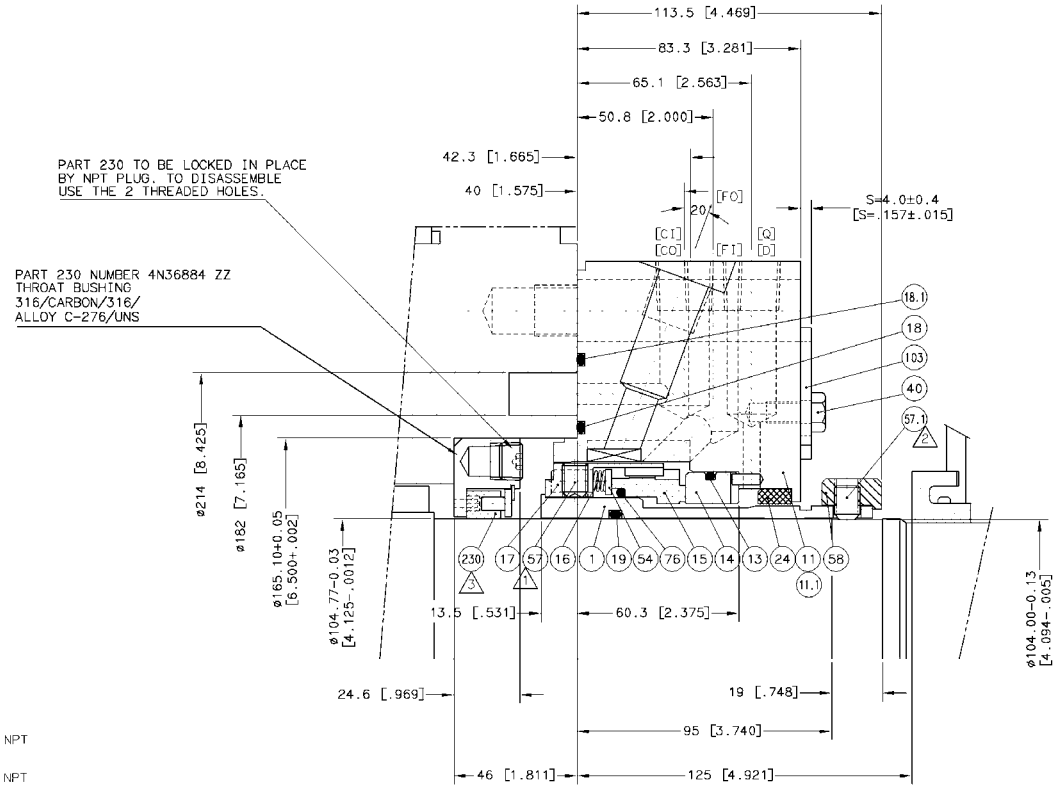

[FI]	FLUSH IN entrada circulacion	1/2" NPT
[FO]	FLUSH OUT salida ciurculacion	1/2" NPT
[Q]	QUENCH qnench	1/2" NPT
[D]	DRAIN drenaje	1/2" NPT
[CI]	COOLING IN entrada refrigeracion	1/2" NPT
[CO]	COOLING OUT salida refrigeracion	1/2" NPT

DRIVE END
(SEE 949407 SHEET 2 OF 2 FOR FREE END)

BILL OF MATERIAL NO: 949407-001 (*SUGGESTED SPARE PARTS)

ENO	PART NUMBER	CODE	QTY	DESCRIPTION	MATERIAL	*	REQD
1	2N32035	DB	1	SHAFT SLEEVE CAMISA DE EJE	316		
11	1N32036	DB	1	FLANGE TAPA	316		
13	568252	GU	1	GASKET JUNTA DE ASIENTO	FLUOROELASTOMER	*	
14	668932	SL	1	SEAL FACE CARA ESTACIONARIA	SILICON CARBIDE	*	
15	154832	RY	1	SEAL FACE CARA ROTATIVA	CARBON	*	
16	669515	NL	12	COIL SPRING MUELLE	ALLOY C-276	*	
17	154834	DB	1	SPRINGHOLDER RETENEDOR	316		
18	568261	GU	1	GASKET JUNTA TAPA	FLUOROELASTOMER	*	
18.1	568269	GU	1	GASKET JUNTA TAPA	FLUOROELASTOMER	*	
19	568243	GU	1	GASKET JUNTA DE CAMISA	FLUOROELASTOMER	*	
24	670059	QE	1	FLANGE BUSHING CASQUILLO TAPA	CARBON		
40	4N02099	CK	3	CAP SCREW TORNILLOS ALLEN	18-8		
54	668944	DB	1	RETAINING RING ANILLO RETENCION	316		
57	4R0438	DB	4	SET SCREW TORNILLO DE FIJACION	316	*	
57.1	4R0438	CI	6	SET SCREW TORNILLO DE FIJACION	ALLOY STEEL	*	
58	670704	DB	1	DRIVE COLLAR COLLAR DE ARRASTRE	316		
76	568248	GU	1	GASKET JUNTA CARA ROTATIVA	FLUOROELASTOMER	*	
103	4R15130	DB	3	SETTING PLATE ANILLO DE AJUSTE	316		
146	4N04363	CI	2	LIFTING EYE PARA CANGAMO	ALLOY STEEL		

SEAL OPERATING LIMITS:	
MAXIMUM DYNAMIC PRES:	22 BARG
MAXIMUM STATIC PRES:	77.6 BARG

1. TIGHTEN SETSCREWS EQUALLY, CROSSWISE, IN 4 STEPS. FINAL TORQUE: 8.5 Nm / 75 LBF.INCH. SECURE AT ASSEMBLY. apretar los prisioneros de forma uniforme y 4 secuencias de tornillos opuestos. par final: 8.5 Nm. colocar los tornillos de asiento durante el montaje.
2. TIGHTEN SETSCREWS EQUALLY, CROSSWISE, IN 4 STEPS. FINAL TORQUE: 33 Nm / 290 LBF.INCH. apretar los prisioneros de forma uniforme y 4 secuencias de tornillos opuestos. par final: 33 Nm.
3. TIGHTEN NPT PLUG, FINAL TORQUE: 15 Nm / 130 LBF.INCH.
4. DISENGAGE SETTING PLATES BEFORE START-UP.
5. FOR INSTALLATION AND OPERATING INSTRUCTIONS SEE SEPARATE MANUAL. para instrucciones de instalacion y operacion, ver manual adjunto.

FINAL DRAWING
RELEASE TO MANUFACTURING
NO FURTHER CHANGES SHALL BE MADE BY THE VENDOR OR THE BUYER
SIGNATURE : JPalani DATE : 10/09/2004
FLOWSERVE
Flow Solutions Division

THIRD ANGLE — END VIEW REDUCED SCALE: — ROTATION

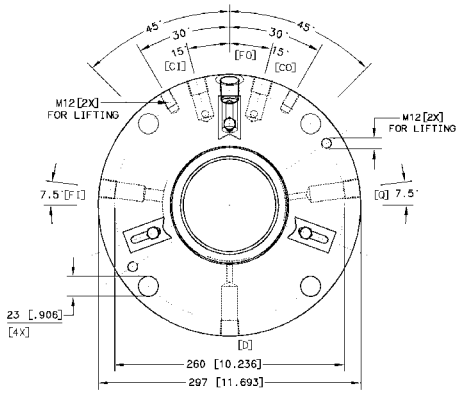

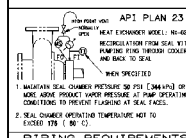

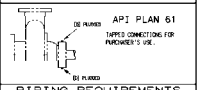

PIPING REQUIREMENTS	PIPING REQUIREMENTS
CUSTOMER: FLOWSERVE FPD COSLADA ADDRESS: COSLADA (MADRID) SPAIN ULTIMATE USER: METKA/LAVRION ADDRESS: GREECE CUSTOMER P.O.: HEL-007852 PRODUCT: BFW TEMP: 144-160°C SPEC GRAVITY: 0.922 SEAL CHAMBER PRES: 5.7 BARG SUCT PRES: 5.7 BARG	DISCH PRES: 160 BARG RPM: 1400-2905 API PLAN: 23/61 API CODE: BSTFN OEM PROJECT NO: 11951 EQUIP ITEM NO: EQUIP SERIAL NO: VISCOSITY: VAPOR PRES:

SEAL TYPE: QB	SEAL SIZE: 4.750
SEAL CONFIG: SINGLE INSIDE-CARTRIDGE	SIZE CODE:
MATL CODE: 5U4X	WEIGHT:
EQUIP MFR: FLOWSERVE FPD COSLADA (SPAIN)	INSTR:
EQUIP MODEL: 6X14 WXH-10 / 10-STAGE HOR.	
EQUIP DWG: M-00204/1	DESIGN:

FLOWSERVE Flow Solutions Division	SCALE: FULL SCALE	OPTIONS:	
	DRAWN: JPALANI	REF DWG: A2N36881	
	DATE: 26-AUG-2004	FORM DWG: A2N36881	REV:A
	CHKD: SSRINIVASAN	ASSY/ORDER NO: SHEET: 1 OF: 2	REV:
	APPVD:	F.O. NO: 949407	949407 A

REVISION: A DATE: 10-SEP-2004 BY: JPALANI CHKD: SSRINIVASAN ECN NO:
REVISION NOTE: REVISED AS PER CUSTOMER COMMENTS; FINALIZED

DIM'S ARE REF UNLESS SPECIFIED OTHERWISE. DIM'S IN: MM [INCHES] D/A1 FEB 2000

NO: 949407 REV: A

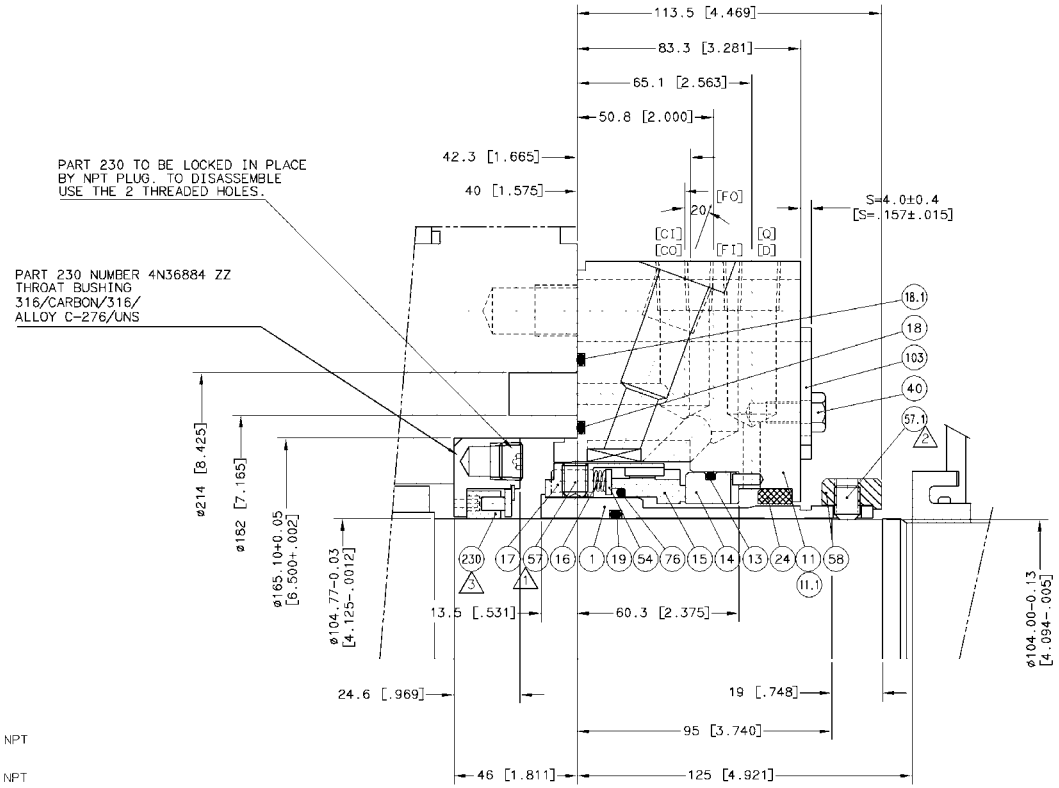

[FI]	FLUSH IN entrada circulacion	1/2" NPT
[FO]	FLUSH OUT salida ciurculacion	1/2" NPT
[Q]	QUENCH qnench	1/2" NPT
[D]	DRAIN drenaje	1/2" NPT
[CI]	COOLING IN entrada refrigeracion	1/2" NPT
[CO]	COOLING OUT salida refrigeracion	1/2" NPT

FREE END
(SEE 949407 SHEET 1 OF 2 FOR DRIVE END)

BILL OF MATERIAL NO: 949407-002 (*SUGGESTED SPARE PARTS)

(NO)	PART NUMBER	CODE	QTY	DESCRIPTION	MATERIAL	*	REQD
1	2N32035	DB	1	SHAFT SLEEVE CAMISA DE EJE	316		
11	1N32037	DB	1	FLANGE TAPA	316		
13	568252	GU	1	GASKET JUNTA DE ASIENTO	FLUOROELASTOMER	*	
14	668932	SL	1	SEAL FACE CARA ESTACIONARIA	SILICON CARBIDE	*	
15	154832	RY	1	SEAL FACE CARA ROTATIVA	CARBON	*	
16	669515	NL	12	COIL SPRING MUELLE	ALLOY C-276	*	
17	154834	DB	1	SPRINGHOLDER RETENEDOR	316		
18	568261	GU	1	GASKET JUNTA TAPA	FLUOROELASTOMER	*	
18.1	568269	GU	1	GASKET JUNTA TAPA	FLUOROELASTOMER	*	
19	568243	GU	1	GASKET JUNTA DE CAMISA	FLUOROELASTOMER	*	
24	670059	QE	1	FLANGE BUSHING CASQUILLO TAPA	CARBON		
40	4N02099	CK	3	CAP SCREW TORNILLOS ALLEN	18-8		
54	668944	DB	1	RETAINING RING ANILLO RETENCION	316		
57	4R0438	DB	4	SET SCREW TORNILLO DE FIJACION	316	*	
57.1	4R0438	CI	6	SET SCREW TORNILLO DE FIJACION	ALLOY STEEL	*	
58	670704	DB	1	DRIVE COLLAR COLLAR DE ARRASTRE	316		
76	568248	GU	1	GASKET JUNTA CARA ROTATIVA	FLUOROELASTOMER	*	
103	4R15130	DB	3	SETTING PLATE ANILLO DE AJUSTE	316		
146	4N04363	CI	2	LIFTING EYE PARA CANGAMO	ALLOY STEEL		

SEAL OPERATING LIMITS:	
MAXIMUM DYNAMIC PRES:	22 BARG
MAXIMUM STATIC PRES:	77.6 BARG

1. TIGHTEN SETSCREWS EQUALLY, CROSSWISE, IN 4 STEPS. FINAL TORQUE: 8.5 Nm / 75 LBF.INCH. SECURE AT ASSEMBLY. apretar los prisioneros de forma uniforme y 4 secuencias de tornillos opuestos. par final: 8.5 Nm. colocar los tornillos de asiento durante el montaje.
2. TIGHTEN SETSCREWS EQUALLY, CROSSWISE, IN 4 STEPS. FINAL TORQUE: 33 Nm / 290 LBF.INCH. apretar los prisioneros de forma uniforme y 4 secuencias de tornillos opuestos. par final: 33 Nm.
3. TIGHTEN NPT PLUG, FINAL TORQUE: 15 Nm / 130 LBF.INCH.
4. DISENGAGE SETTING PLATES BEFORE START-UP.
5. FOR INSTALLATION AND OPERATING INSTRUCTIONS SEE SEPARATE MANUAL. para instrucciones de instalacion y operacion, ver manual adjunto.

FINAL DRAWING
RELEASE TO MANUFACTURING
NO FURTHER CHANGES SHALL BE MADE BY THE VENDOR OR THE BUYER
SIGNATURE : JPalani DATE : 10/09/2004
FLOWSERVE
Flow Solutions Division

THIRD ANGLE | END VIEW REDUCED SCALE: | ROTATION

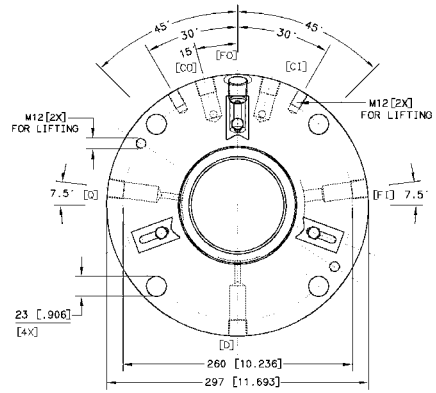

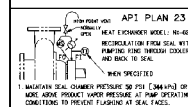

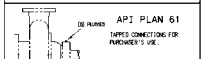

PIPING REQUIREMENTS	PIPING REQUIREMENTS
CUSTOMER: FLOWSERVE FPD COSLADA ADDRESS: COSLADA (MADRID) SPAIN ULTIMATE USER: METKA/LAVRION ADDRESS: GREECE CUSTOMER P.O.: HEL-007852 PRODUCT: BFW TEMP: 144-160°C SPEC GRAVITY: 0.922 SEAL CHAMBER PRES: 5.7 BARG SUCT PRES: 5.7 BARG	DISCH PRES: 160 BARG RPM: 1400-2905 API PLAN: 23/61 API CODE: BSTFN OEM PROJECT NO: 11951 EQUIP ITEM NO: EQUIP SERIAL NO: VISCOSITY: VAPOR PRES:

SEAL TYPE: QB		SEAL SIZE: 4.750	
SEAL CONFIG: SINGLE INSIDE-CARTRIDGE		SIZE CODE:	
MATL CODE: 5U4X		WEIGHT:	
EQUIP MFR: FLOWSERVE FPD COSLADA (SPAIN)		INSTR:	
EQUIP MODEL: 6X14 WXH-10 / 10-STAGE HOR.			
EQUIP DWG: M-00204/1		DESIGN:	
FLOWSERVE Flow Solutions Division	SCALE: FULL SCALE	OPTIONS:	
	DRAWN: JPALANI	REF DWG: A2N36881	
	DATE: 26-AUG-2004	FORM DWG: A1N50020	REV:-
	CHKD: SSRINIVASAN	ASSY/ORDER NO: SHEET: 2 OF: 2	REV:
	APPVD:	F.O. NO: 949407	949407 A

REVISION: A DATE: 10-SEP-2004 BY: JPALANI CHKD: SSRINIVASAN ECN NO:
REVISION NOTE: REVISED AS PER CUSTOMER COMMENTS; FINALIZED

DIM'S ARE REF UNLESS SPECIFIED OTHERWISE. DIM'S IN: MM [INCHES] D/A1 FEB 2000

8 PARTS LIST AND DRAWINGS

8.1 Sectional drawing

8.2 General arrangement drawing

8.3 Piping and installation data

8.4 Mechanical seal drawing

8.5 Coupling drawing

8.6 Motor drawing

8.7 Voith drawing

PUMP SIDE

VARIATOR SIDE

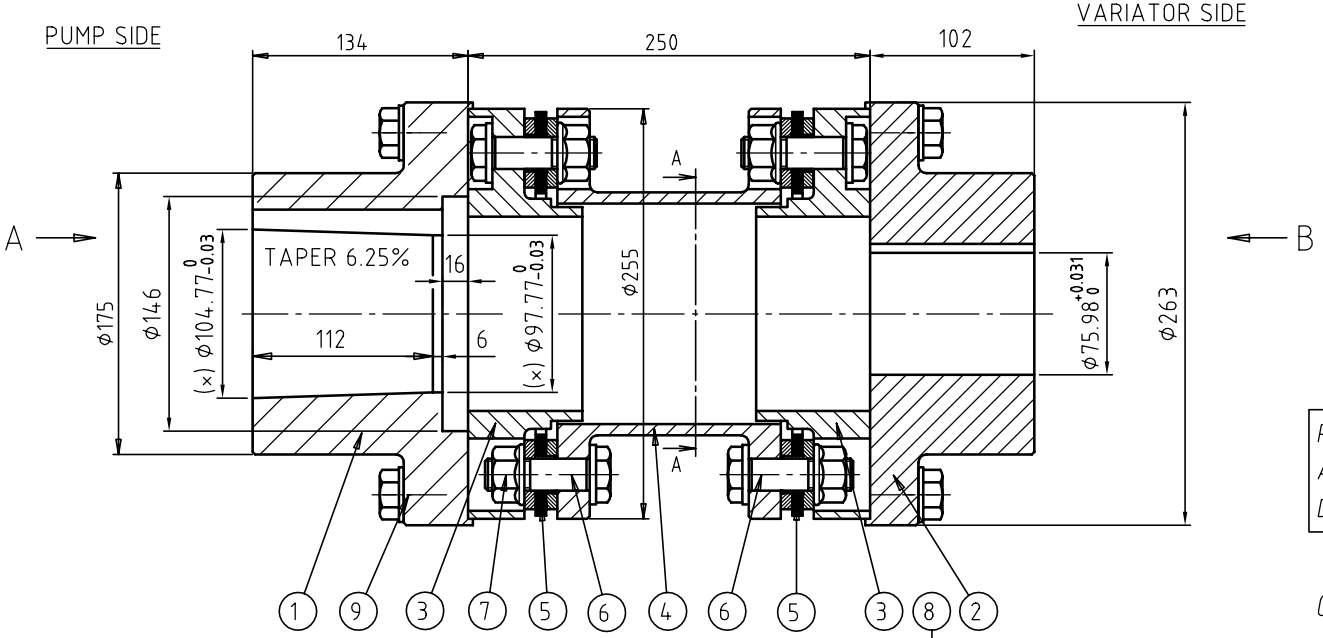

(x) THESE MEASURES ARE FINAL DIMENSIONS. KEEP THE WITH 1 mm. LESS FOR THE FINAL ADJUSTEMENT AT I.D.P.

SECTION A-A

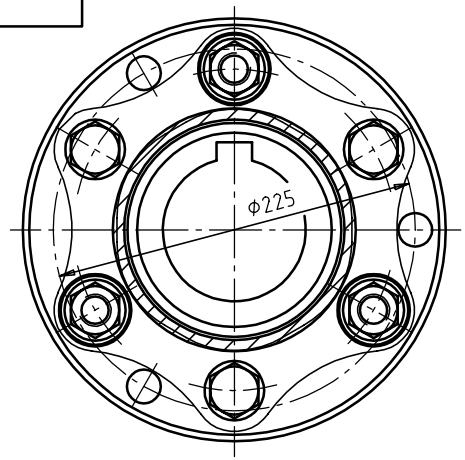

Project: METKA-LAVRION
ACCORDING TO RTA 10894-A
DRAWING M-01151/5

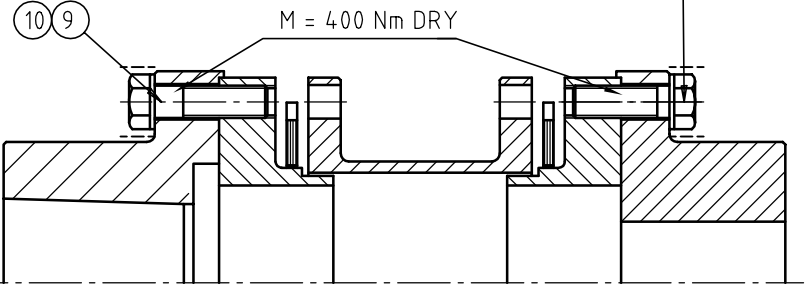

COUPLING RATINGS:

Nominal torque: 10200 Nm.

Peak torque: 20400 Nm.

Max. axial misalignment: ±4,7 mm.

Max. angular misalignment: ±1°.

Tightening torque (non lubricated bolts, items 8-9): 400 Nm.

Dynamically balanced to G 1 and 2890rpm according to ISO 1940-1

VIEW A

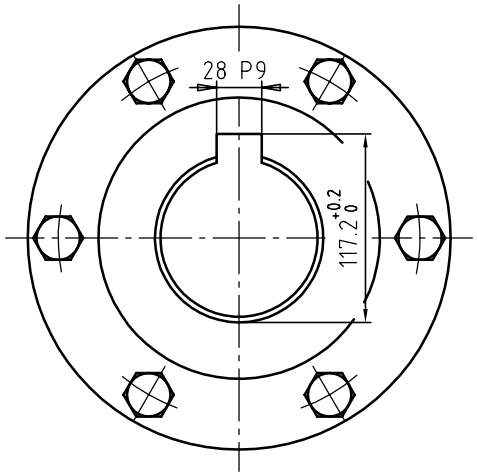

VIEW B

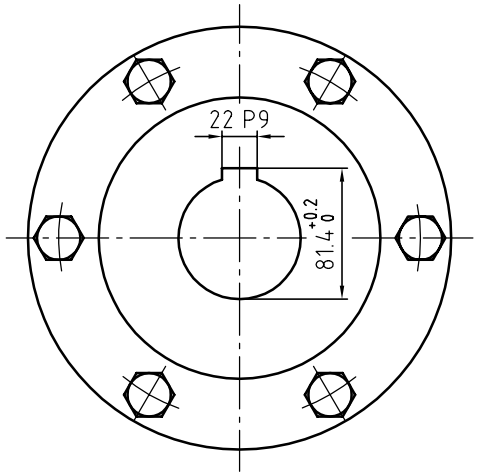

QTY	DENOMINATION	ITEM	DRAWING NR.	MATERIAL	NORM	WEIGHT(Kg)
12	WASHER	10		ST	DIN-125	
6	BOLT M18x70	9		12.9	DIN-933	
6	BOLT M18x60	8		12.9	DIN-933	
12	LOCKNUT M20	7		10	JAURE	
12	DISC PACK BOLT M20	6		10.9	JAURE	
2	DISC PACK	5			JAURE	
1	SPACER	4		St-52	JAURE	
2	FLANGE DO-255-6	3		St-52	JAURE	
1	HUB	2		St-52	JAURE	
1	HUB	1		St-52	JAURE	

DATE	-	QUOTATION NR.:	-
MODIFICATION	-	ORDER NR.:	-
REV.	-		

	DATE	NAME
DESIGNER	16-09-04	OSKAR
REVISED & APROVED	16-09-04	INAKI

JAURE,S.A.
ZIZURKIL (GUIPUZCOA)

ISO 9001 CERTIFICATED FIRM

SCALE:	MATERIAL:	HEAT TREATEMENT:	WEIGHT(Kg):	QTY:	DRAWING NR.:	REV.
-	-	-	-	-	OF-14885	-

PART NAME:	ASSEMBLY NAME:	
ASSEMBLY	COUP. LAMIDISC DO-255-6	REPLACING TO: -
		REPLACED BY: -

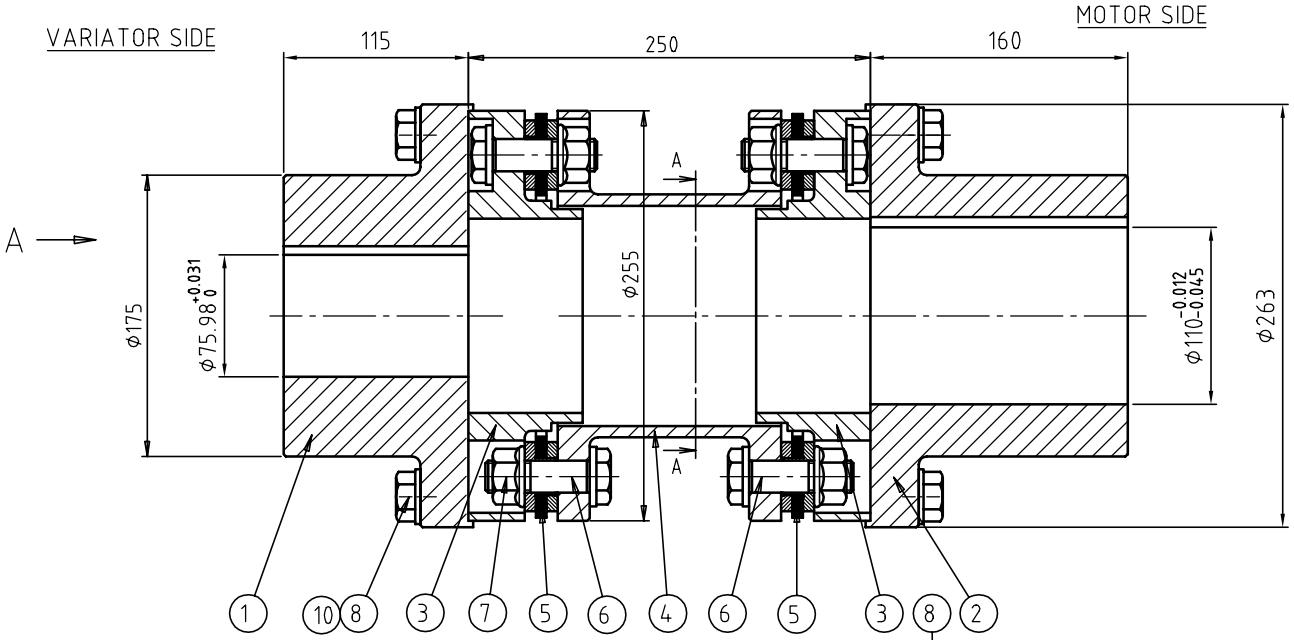

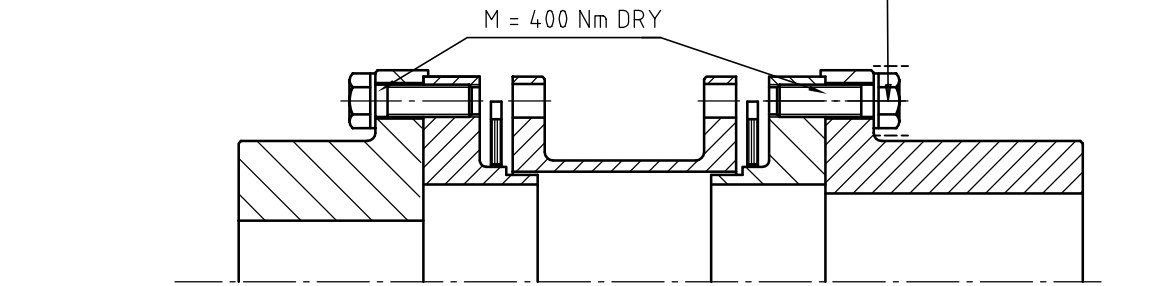

SECTION A-A

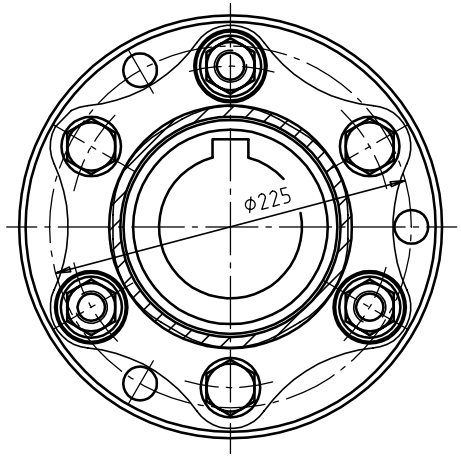

Project: METKA-LAVRION
ACCORDING TO RTA 10894-B
DRAWING M-01151/6

COUPLING RATINGS:

Nominal torque: 10200 Nm.

Peak torque: 20400 Nm.

Max. axial misalignment: ±4,7 mm.

Max. angular misalignment: ±1°.

Tightening torque (non lubricated bolts, items 8): 400 Nm.

Dynamically balanced to G 1 and 2900rpm according to ISO 1940-1

VIEW A

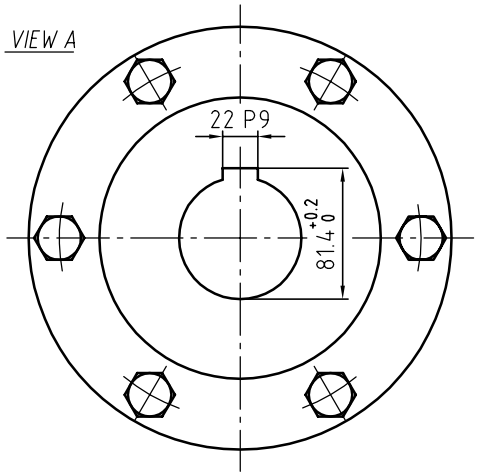

VIEW B

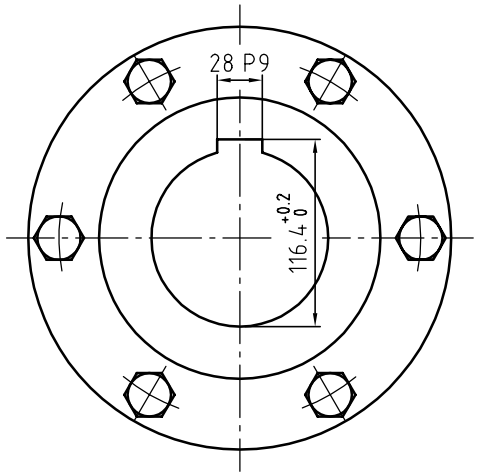

QTY	DENOMINATION	ITEM	DRAWING NR.	MATERIAL	NORM	WEIGHT(Kg)
12	WASHER	10		ST	DIN-125	
12	BOLT M18x60	8		12.9	DIN-933	
12	LOCKNUT M20	7		10	JAURE	
12	DISC PACK BOLT M20	6		10.9	JAURE	
2	DISC PACK	5			JAURE	
1	SPACER	4		St-52	JAURE	
2	FLANGE DO-255-6	3		St-52	JAURE	
1	HUB	2		St-52	JAURE	
1	HUB	1		St-52	JAURE	

DATE -

MODIFICATION -

REV. -

QUOTATION NR.: -

ORDER NR.: -

	DATE	NAME
DESIGNER	16-09-04	OSKAR
REVISED & APROVED	16-09-04	INAKI

JAURE,S.A.
ZIZURKIL (GUIPUZCOA)

ISO 9001 CERTIFICATED FIRM

SCALE:	MATERIAL:	HEAT TREATEMENT:	WEIGHT(Kg):	QTY:
-	-	-	-	-

DRAWING NR.: 0F-14887 REV. -

PART NAME: ASSEMBLY

ASSEMBLY NAME: COUP. LAMIDISC DO-255-6

REPLACING TO: -

REPLACED BY: -

Q Project:

LAVRION V-CCPP
DMKT 11 21 302

Title: Motor Drawing

(HP BoilerFeed Water Pumps 5 LAC30/40 AP001)

Supplier Document No:	-	Issue: 1
KKS Document No:	5-LAC-EDP-FPD-254	
Purpose of issue: For Approval		Date: 15/09/04

00-Y-X-10302-F3/I Issue 1

Prepared: CL

Reviewed: SW

Approved: CW

413-005-PM21200-0006-0001-B

3 573460 940522

EMPRESARIOS AGRUPADOS

- 4 OCT. 2004

COMMENTS ☒ NO COMMENTS ☐

413-005-PM21200-6B

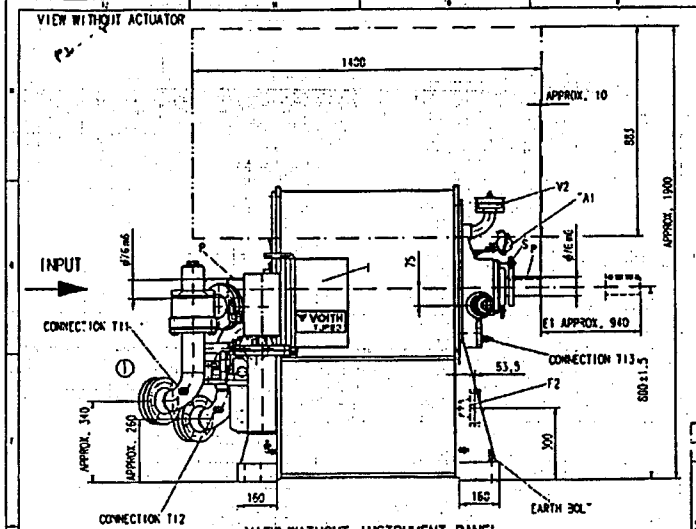

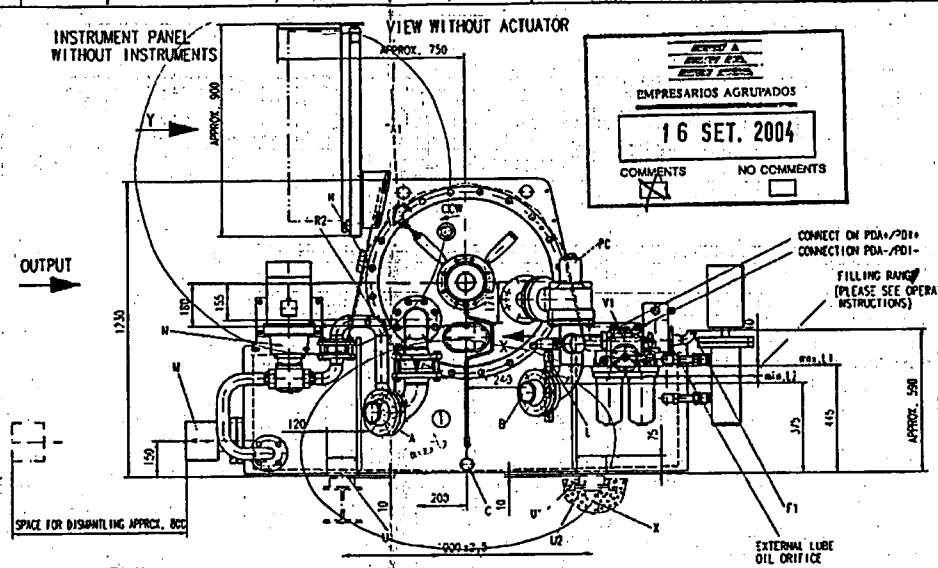

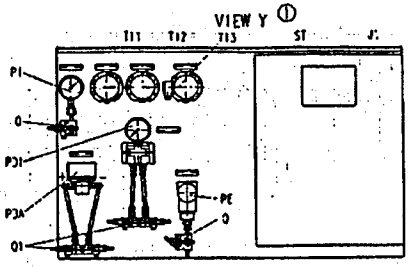

FINAL POSITION TO BE CONFIRMED BY METKA
{ FINALISED WITH E-MAILS A-1073
FPD-UGT-BCP-073

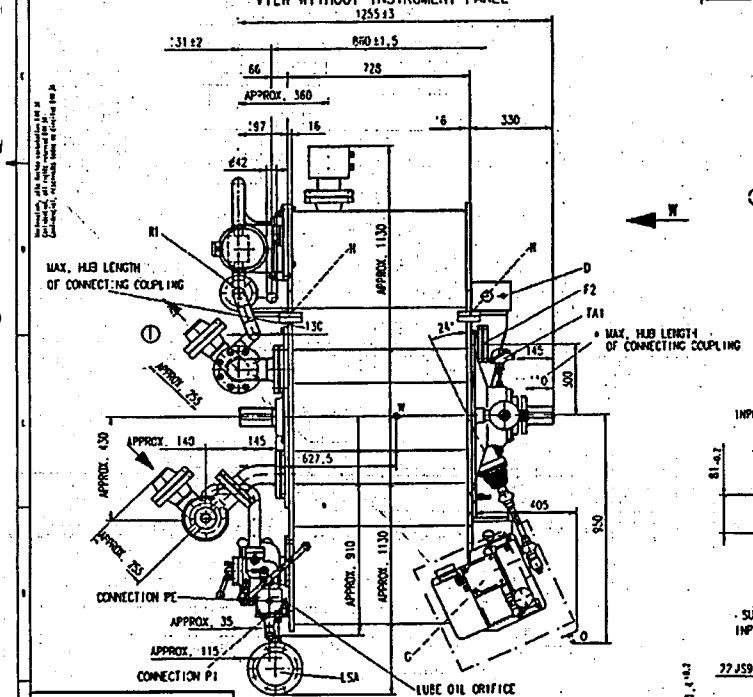

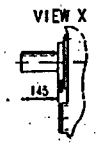

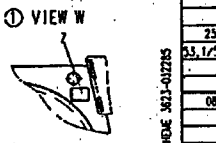

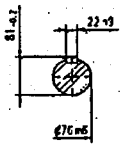

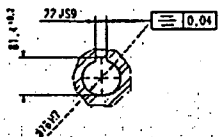

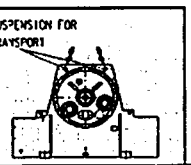

PIPE CONNECTION TOLERANCE TO EN ISO 13920-D

MOUNT THE COVERS FOR ROTATING PARTS ACCORDING TO THE LEGAL REGULATIONS !

THE TURBO COUPLING IS A MACHINE WITH PIPINGS, COOLERS AND ONE-WALL SUMP FOR MINERAL OIL. ADDITIONAL REGULATIONS CONCERNING THE ENVIRONMENT, IF ANY, HAVE TO BE DETERMINED AT SITE !

NO. FROM OIL CIRCUIT AND MEASURING POINT SCHEME 3621-012205

	A	WELDING NECK FLANGE TO COOLER 3" ANSI 150 LBS
	B	WELDING NECK FLANGE FROM COOLER 3" ANSI 150 LBS
09	C	OIL DRAIN PLUG G 1 1/4
	D	THREAD FOR ADJUSTING SCREW M16
	E1	CLEARANCE FOR ROTATING PARTS REMOVAL
	F1	EXTERNAL OIL OUTLET PIPE 1"
	F2	EXTERNAL OIL RETURN FLANGE 2" ANSI 150 LBS
25	G	ACTUATOR, Contrac PME 120 A1
53,1/53,2	H	ATTACHMENT FOR VIBRATION PICK UP
	I	INSPECTION COVER
	J1	TERMINAL BOX
08	L	OIL LEVEL SIGHT GLASS
	L1	OIL LEVEL AT SCOOP TUBE POSITION 0% DURING OPERATION
	L2	OIL LEVEL AT SCOOP TUBE POSITION 100% DURING OPERATION
37	LSA	OIL LEVEL SWITCH
36	M	HEATING ROD
46	N	AUX. LUBE OIL PUMP
	O	CLEARANCE FOR SCOOP TUBE REMOVAL
	P	FITTED KEY 22x14x130 DIN 6885
16	P1	PRESSURE INDICATOR
17,2	PE	PRESSURE TRANSMITTER
41,1	PDA	DIFFERENTIAL PRESSURE SWITCH
41,2	PDI	DIFFERENTIAL PRESSURE INDICATOR
46,3	FC	SEQUENCE VALVE
55	G	2-VALVE MANIFOLD
55,1	Q1	5-VALVE MANIFOLD
46,1	R1	NON RETURN VALVE DN40
46,2	R2	NON RETURN VALVE DN80
38,1	S	SPEED MEASURING PICK UP
38,3	ST	SPEED MEASURING TRANSDUCER WITH SPEED INDICATOR AND REVERSE ROTATION MONITORING SYSTEM
30-32	TA1	RESISTANCE THERMOMETER (BEARING 1-3)
33	T1	CAPILLARY DIAL THERMOMETER (OIL FLOW FROM COOLER)
35	T12	CAPILLARY DIAL THERMOMETER (OIL FLOW TO COOLER)
18	T13	CAPILLARY DIAL THERMOMETER (SCOOP TUBE OUTLET)
	U1	SHIMS FOR FOUNDATION 10mm
	U2	FOUNDATION RAIL / FOUNDATION PLATES - NOT VOITH SUPPLY
42	V1	DOUBLE FILTER
07	V2	VENT FILTER AND FILLING POSSIBILITY G 1-1/4
	W	CENTRE OF GRAVITY WITHOUT OIL
	X	STONE BOLT - NOT VOITH SUPPLY
	Z	NAMEPLATE

EMPRESARIOS AGRUPADOS
16 SET. 2004
COMMENTS NO COMMENTS

SIZE		562
DEADLOAD		
OIL IN THE SUMP APPROX	(l)	500
OIL IN THE ROT. PARTS	(l)	36
TOTAL WEIGHT WITHOUT OIL	(kg)	1600
ROT. PARTS WITH OIL	(kg)	296

MASS MOMENT OF INERTIA	J (kgm²)	
PRIMARY WITH OIL	(kgm²)	11,59
SECONDARY WITH OIL	(kgm²)	1,46

DYNAMIC FOUNDATION LOADING F dyn (N)		
F dyn = ne/60	(Hz)	49,75
F dyn = y (ne/1500)²	(N)	1750

VIBRATIONS TO WORK DOCUMENT CB1

SCOOP TUBE STROKE		
DIRECTION OF ROTATION "CCW"	(mm)	145

EXECUTION SHEET 2/2 FOR
VTC-NO. : 112 073
TAG-No.: SLAC40A001

THE OIL VOLUME OF COOLER AND PIPINGS IS NOT INCLUDED IN THE FILLING CAPACITY.

HP Boiler Feedwater Pumps
SLA3/40A001
413-005-PM21200-0028-0001-B
1 005176 984382

Flowserve Lavrion SA

PUBLIC POWER CORPORATION — LAVRION V CC PP

METKA — VARIABLE SPEED COUPLING ASSEMBLY PLAN

562 SVTL 12
AZ-Nr.: 18 188 562

CAD

1:10

VARIABLE SPEED COUPLING
ASSEMBLY PLAN

3600-026839

76 m6	+0,318 +0,248	ø	1200-01-01
76 H7	+0,318 0	ø	1200-01-01
22 h9	0 -0,052		
22 JS9	+0,026 -0,026		

REVISION

PROPRIETARY INFORMATION

28.07.2004/09:23:55 Plotted by atk; Department cr (Scalefactor 0-692240; Account (FARBE)

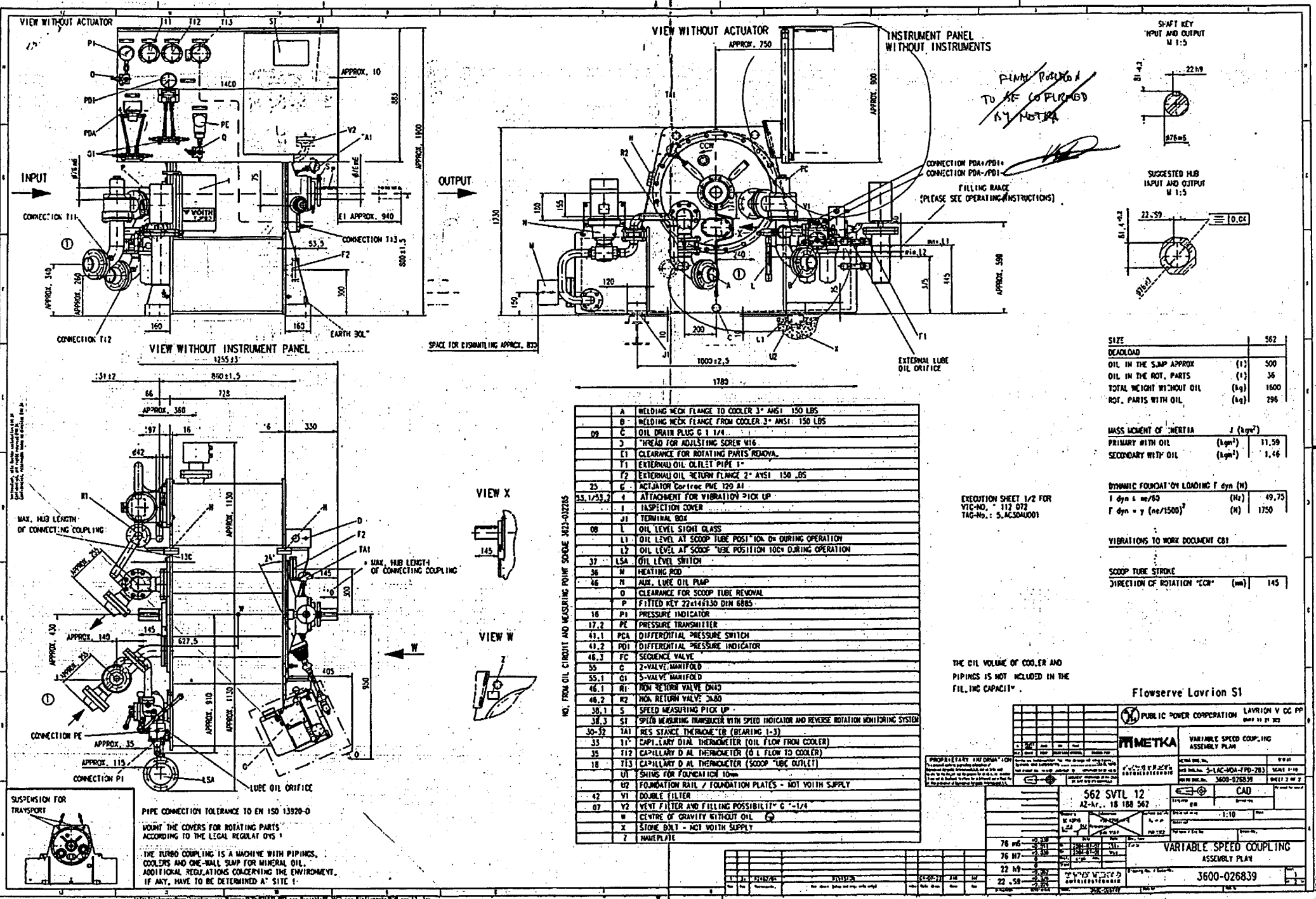

	A	WELDING NECK FLANGE TO COOLER 3" ANSI 150 LBS
	B	WELDING NECK FLANGE FROM COOLER 3" ANSI 150 LBS
09	C	OIL DRAIN PLUG G 1 1/4
	D	THREAD FOR ADJUSTING SCREW M16
	E1	CLEARANCE FOR ROTATING PARTS REMOVAL
	T1	EXTERNAL OIL OUTLET PIPE 1"
	T2	EXTERNAL OIL RETURN FLANGE 2" ANSI 150 LBS
25	G	ACTUATOR Cortrac PME 120 AI
53.1/53.2	H	ATTACHMENT FOR VIBRATION PICK UP
	I	INSPECTION COVER
	J1	TERMINAL BOX
08	L	OIL LEVEL SIGHT GLASS
	L1	OIL LEVEL AT SCOOP TUBE POSITION 0% DURING OPERATION
	L2	OIL LEVEL AT SCOOP TUBE POSITION 100% DURING OPERATION
37	LSA	OIL LEVEL SWITCH
36	M	HEATING ROD
46	N	AUX. LUBE OIL PUMP
	O	CLEARANCE FOR SCOOP TUBE REMOVAL
	P	FITTED KEY 22x14x130 DIN 6885
16	PI	PRESSURE INDICATOR
17.2	PE	PRESSURE TRANSMITTER
41.1	PDA	DIFFERENTIAL PRESSURE SWITCH
41.2	PDI	DIFFERENTIAL PRESSURE INDICATOR
46.3	FC	SEQUENCE VALVE
55	C	2-VALVE MANIFOLD
55.1	CI	5-VALVE MANIFOLD
46.1	R1	NON RETURN VALVE DN40
46.2	R2	NON RETURN VALVE DN80
38.1	S	SPEED MEASURING PICK UP
38.3	ST	SPEED MEASURING TRANSDUCER WITH SPEED INDICATOR AND REVERSE ROTATION MONITORING SYSTEM
30-32	TA1	RESISTANCE THERMOMETER (BEARING 1-3)
33	T1'	CAPILLARY DIAL THERMOMETER (OIL FLOW FROM COOLER)
35	T12	CAPILLARY DIAL THERMOMETER (OIL FLOW TO COOLER)
18	T13	CAPILLARY DIAL THERMOMETER (SCOOP TUBE OUTLET)
	U1	SHIMS FOR FOUNDATION 10mm
	U2	FOUNDATION RAIL / FOUNDATION PLATES - NOT WITH SUPPLY
42	V1	DOUBLE FILTER
07	V2	VENT FILTER AND FILLING POSSIBILITY G 1-1/4
	W	CENTRE OF GRAVITY WITHOUT OIL
	X	STONE BOLT - NOT WITH SUPPLY
	Z	NAMEPLATE

SIZE		562
DEADLOAD		
OIL IN THE SUMP APPROX	(t)	500
OIL IN THE ROT. PARTS	(t)	36
TOTAL WEIGHT WITHOUT OIL	(kg)	1600
ROT. PARTS WITH OIL	(kg)	296

MASS MOMENT OF INERTIA	J (kgm²)	
PRIMARY WITH OIL	(kgm²)	11,59
SECONDARY WITH OIL	(kgm²)	1,46

DYNAMIC FOUNDATION LOADING F dyn (N)		
f dyn = ne/60	(Hz)	49,75
F dyn = y (ne/1500)²	(N)	1750

VIBRATIONS TO WORK DOCUMENT C81

SCOOP TUBE STROKE		
DIRECTION OF ROTATION "CCW"	(mm)	145

Q Project:
LAVRION V-CCPP **DMKT 11 21 302**

Title: Variable Speed Coupling Cooler Drawing
(HP BoilerFeed Water Pumps 5 LAC30/40 AP001)

Supplier Document No:	-	Issue: 0
KKS Document No:	5-LAC-MDP-FPD-295	
Purpose of Issue: For approval		Date: 15/07/04

00-Y-X-10302-F3/I Issue 1

Prepared: KH

Reviewed: DP

Approved: MM

413005- PM21200- 30A

EMPRESARIOS AGRUPADOS

16 SET. 2004

COMMENTS ☒ NO COMMENTS ☐

17/09/2004

413-005-PM21200-0030-0001-A

7 274044 935946

Pos	Benennung DESIGNATION CONCEPTO	Grösse SIZE TAMANO	DIN/EN/ISO	Werkst./DIN EN MATERIAL	SIMILAR ASTM/AISI
21	Vorschweissflansch WELDING NECK FLANGE BRIDA	4" RF CLASS 150	ANSI B 16.5	C 21	A105-71T
20	Kugelhahn BALL VALVE LLAVE ESFERICA	G 3/4		Ms	B455
19	Zylinderkopfnet SOCKET HEAD RIVED REMACHE			Al	AA1050
18	Kennzeichnungsschild NAME PLATE PLACA IN DICADORA DE CARACTERISTICAS			Al Mg 2F 26	AA 25754
17	Schildtraegerblech TRESTLE CABALETTE		DIN 1542	S235JR DIN EN10025	A283-C
16	Dichtring JOINT JUNTA	A21x26	DIN 7603	Cu	B111-122
15	Verschlussschraube PLUG TAPON	G 1/2	DIN 910	Ms	B455
14	Flachdichtung mit Steg FLAT GASKET WITH WEB JUNTA	DN25OPN16		Klinger - SIL C 4400	NON ASBESTOS
13	Flachdichtung FLAT GASKET JUNTA	DN25OPN16	DIN 2690	Klinger - SIL C 4400	NON ASBESTOS
12	Skl. Schraube HEX. BOLT TORNILLO HEXAGONAL	M24x110	ISO 4014	8.8-A	SAE J 429 GRADE 2
11	Dichtring JOINT JUNTA	A27x32	DIN 7603	Cu	B111-122
10	Verschlussschraube PLUG TAPON	G 3/4	DIN 910	Ms	B455
9	Skl. Mutter HEX. NUT TUERCA HEXAGONAL	M24	ISO 4032	8-A	SAE J 429 GRADE 2
8	Skl. Schraube HEX. BOLT TORNILLO HEXAGONAL	M24x90	ISO 4014	8.8-A	SAE J 429 GRADE 2
7	RDR O-RING JUNTA-O	ø250 x 8		NBR 80	PERBUNAN SHORE 80
6	Blechring PRESSURE RING ANILLO		DIN 1543	S235JR DIN EN10025	A283-C
5	Umlenkboden BONNET CAMARA DE CAMBIAR LA DIRECCION			EN-GJL-250 DIN EN 1561	A48-35B
4	Anschlussflansch CHANNEL CAMARA DE CONEXION			EN-GJL-250 DIN EN 1561	A48-35B
3	Befestigung angeschweisst SUPPORT WELDED SOPORTE			S235JR DIN EN10025	A283-C
2.4	Rohrboden beweglich FLOATING TUBE SHEET ESPEJO MOVIL		DIN 17665	CuNi10Ni	B171-630
2.3	Umlenkblech BAFFLE MAMPARA		DIN 1541	DC 01 DIN EN 10130	A366
2.2	Rohr TUBE TUBO	ø10	DIN17440	ASCuNi1B10 (1.4301)	304
2.1	Rohrboden starr STATIONARY TUBE SHEET ESPEJO FIJO		DIN 17665	CuNi10Ni	B171-630
	Rohrbuendel Baugruppe TUBE STACK HAZ DE TUBOS				
1.6	Anschweissstutze SOCKET BOQUILLA DEL DRENAJE LADO CARCASA	G 3/4	DIN 2448	St 35.8/I DIN 17175	A106-A
1.5	Vorschweissflansch WELDING NECK FLANGE BRIDA	DN25OPN16	DIN 2633	C 22.3 DIN 17200	A519-1020
1.4	Vorschweissflansch WELDING NECK FLANGE BRIDA	3" RF CLASS 150	ANSI B 16.5	C 21	A105-71T
1.3	Reduzierstueck REDUCTION REDUCTOR	ø114.3x88.9	DIN 2616 DIN 1629	P235T1 DIN EN10217-1	A53-A
1.2	Mantelrohr SHELL PIPE CARCASA	ø273x6	DIN 1626 DIN 2458	P235T1 DIN EN10217-1	A53-A
1.1	Vorschweissflansch WELDING NECK FLANGE BRIDA	DN25OPN16	DIN 2633	C 22.3 DIN 17200	A519-1020
	Mantel Baugruppe SHELL CARCAZA CONJUNTO				
	Waermeuebertscher HEAT EXCHANGER INTERCAMBIADOR DE CALOR				

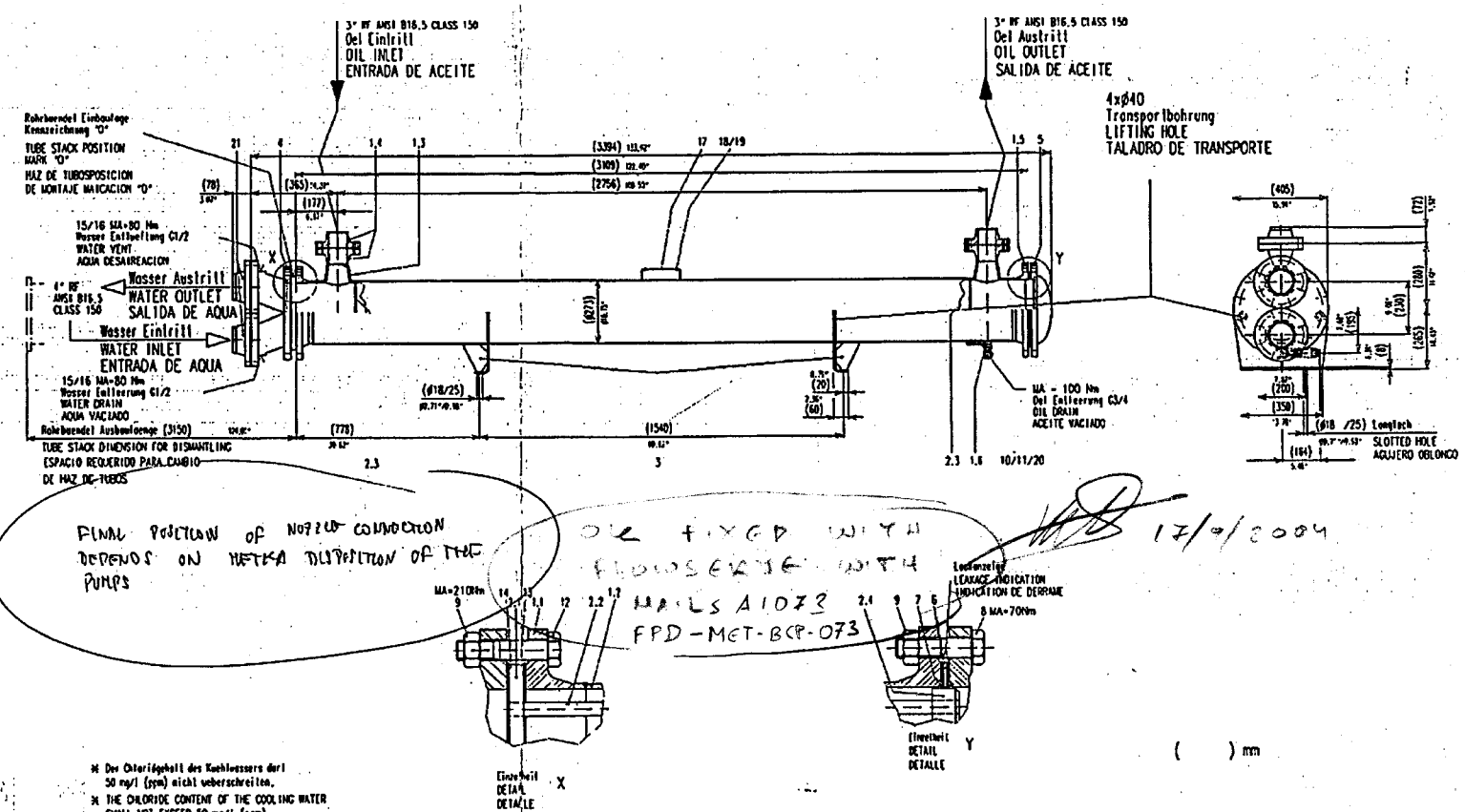

FINAL POSITION OF NOZZLE CONNECTION DEPENDS ON METKA DISPOSITION OF THE PUMPS

OIL FIXED WITH FLOWSERVE WITH MA: LS A1073 FPD-MET-BCP-073

17/9/2004

* Der Chloridgehalt des Kuehlwassers darf 50 mg/l (ppm) nicht ueberschreiten.
* THE CHLORIDE CONTENT OF THE COOLING WATER SHALL NOT EXCEED 50 mg/l (ppm).
* EL CONTENIDO EN CLORURO DEL AGUA DE REFRIGERACION NO DEBE EXCEDER LOS 50 mg/l (ppm).

Herstell-Nr.: SERIAL-NO.: NUMERO DE FABRICACION:	Betriebsdaten OPERATING DATA DATOS DE SERVICIO	Mantelraum SHELL SIDE LADO DE CAMISA	Rohrraum TUBE SIDE LADO DE TUBO
8836	Medium FLUID LIQUIDO	Oel OIL ACEITE	* Wasser * WATER * AQUA
8837	Betriebsvolumenstrom V OPERATING FLOW RATE V VOLUMEN NOMINAL V.	30 m³/h 132.09 gpm	55 m³/h 242.15 gpm
	Mindestvolumenstrom wegen Korrosion MIN. FLOW RATE BECAUSE OF CORROSION VOLUMEN MIN. TENIENDO EN CUENTA A/C CORROSION		25 m³/h 110.07 gpm
	Ein-/Austrittstemperatur INLET/OUTLET TEMPERATURE TEMPERATURE DE ENTRADA/SALIDA	72 °C/50 °C 161.6 °F/122 °F	40 °C/45 °C 104 °F/113 °F
	Zul. Betriebsueberdruck MAX. ADMISSIBLE WORKING PRESSURE SOBREPRESION ADMISIBLE DE SERVICIO	10 bar 145 psi	10 bar 145 psi
	Pruefueberdruck TEST PRESSURE/ SOBREPRESION DE PRUEBA	15 bar 217.5 psi	15 bar 217.5 psi
	Zul. Betriebstemperatur MAX. ADMISSIBLE WORKING TEMPERATURE TEMPERATURE DE SERVICE ADMISSIBLE	120 °C 248 °F	70 °C 158 °F
	Inhalt CONTENTS CONTENIDO	99 L 23.77 gal	63 L 16.64 gal
	Einbau- und Betriebsanweisung INSTALLATION AND OPERATING INSTRUCTIONS INSTRUCTION DE MONTAJE ET DE SERVICE	3.626-7101	

Gewicht: WEIGHT PESO	leer EMPTY VACIO	gefuellt FILLED LLENADO
	492 kg	645 kg
	1085 lb	1422 lb

VERO NEW

* INTERCAMBIADOR DE CALOR

HP Boiler Feedwater Pumps
F. LACROIXO APOOI

Flowserve Lavrion S.I

PUBLIC POWER CORPORATION — LAVRION V CC FP

METKA — HEAT EXCHANGER

VOSSNER KAEDE ANGIESSERTECHNIK

PROPRIETARY INFORMATION

Typ: L1 N1 05 19 13M
AZ-Nr.: 18 188 562

CAD

Waermeuebertscher
HEAT EXCHANGER

3600-039681

SCALE 1:10

Q Project:
LAVRION V-CCPP **DMKT 11 21 302**

Title: Motor Instrument List
(HP BoilerFeed Water Pumps 5 LAC30/40 AP001)

Supplier Document No:	-	Issue: 0
KKS Document No:	5-LAC-YLP-FPD-256	
Purpose of issue: For approval		Date: 26/07/04

00-Y-X-10302-F3/I Issue 1

Prepared: NO

Reviewed: MAP

Approved: MM

EMPRESARIOS AGRUPADOS
16 SET. 2004
COMMENTS ☒ NO COMMENTS ☐

Comments
17/09/2004

413-005-PM21200-0033-0001-A
6 204560 472763

413-005-PM-21200-33A

FLOWSERVE

Customer: Metka
Project: Lavrion V
Tag Nº 5LAC30/40-AP001
Service H.P. BOILER FEED WATER PUMPS
FPD REF: 10.06.50.10894
P.O. -

SHEET 2 OF 3

Equipment	REV.	Tag	Location	Type of Instrument	Manufactured/ Supplied by	Model	Medium	Unit	Messur.Range From	Messur.Range To	ALIMENT.	Output	Set Point Alarm	Set Point Trip	Drawing No.	Notes
MOTOR		5LAC30/40AP001JE21	Winding phase R	Temperature detector	Minco	S6700PA100T200Z00	Metal	°C	0	200	-	Ohm	130	100		Pt 100 single / 3W
"		5LAC30/40AP001JE22	Winding phase S	Temperature detector	Minco	S6700PA100T200Z00	Metal	°C	0	200	-	Ohm	130	100		Pt 100 single / 3W
"		5LAC30/40AP001JE23	Winding phase T	Temperature detector	Minco	S6700PA100T200Z00	Metal	°C	0	200	-	Ohm	130	100		Pt 100 single / 3W
"		5LAC30/40AP001JE24	Winding phase R	Temperature detector	Minco	S6700PA100T200Z00	Metal	°C	0	200	-	Ohm	130	100		Pt 100 single / 3 W / SPARE
"		5LAC30/40AP001JE25	Winding phase S	Temperature detector	Minco	S6700PA100T200Z00	Metal	°C	0	200	-	Ohm	130	100		Pt 100 single / 3 W / SPARE
"		5LAC30/40AP001JE26	Winding phase T	Temperature detector	Minco	S6700PA100T200Z00	Metal	°C	0	200	-	Ohm	130	100		Pt 100 single / 3 W / SPARE
"		5LAC30/40AP001JE31	Bearing, driven end	Temperature detector	Tese / Tese	3A000	Metal	°C	0	150		Ohm	90	95		2 x Pt 100 / 3W
"		5LAC30/40AP001JE32	Bearing, non driven end	Temperature detector	Tese / Tese	3A000	Metal	°C	0	150		Ohm	90	95		2 x Pt 100 / 3W
~~[illegible]~~		~~5LAC30/40AP001JE31~~	~~Hot & Cold air temperature~~	~~Temperature detector~~	~~Tese / Tese~~	~~3A000~~	~~Air~~	~~°C~~	~~0~~	~~150~~		~~Ohm~~	~~110 / 90~~	~~130 / 95~~		~~2 x Pt 100 / 3W~~

JE33

JE34

Rev.	DESCRIPTION	Name	Date
0	FIRST ISSUE	N.O	15/07/2004

Pump: 6X14WXH-10

Prepared by: N.O.Z
Checked by: N.A.P.M.
App'd by: M.M.

Title: **INSTRUMENT LIST**
MOTOR

REF:

Drawing N. **5-LAC-YLP-FPD-256** **0**

Please, clarify if this is necessary Discard this comment

Include

5LAC30/40AP001JT10 | MOTOR DXTS | SPEED METER

(due to specification)

PPC

Note: It is required drawings of every box, valve and heat exchanger, where reference must be included in this drawing.

TYPE	OUTPUT HP.	OUTPUT KW.	POLE	TIME RATING	VOLTAGE V	HZ	SYN. SPEED RPM
AECW-S2002		1750	2	CONT.	6000	50	3000

TOTALLY ENCLOSED WATER-TO-AIR COOLED TYPE, SQUIRREL CAGE ROTOR.

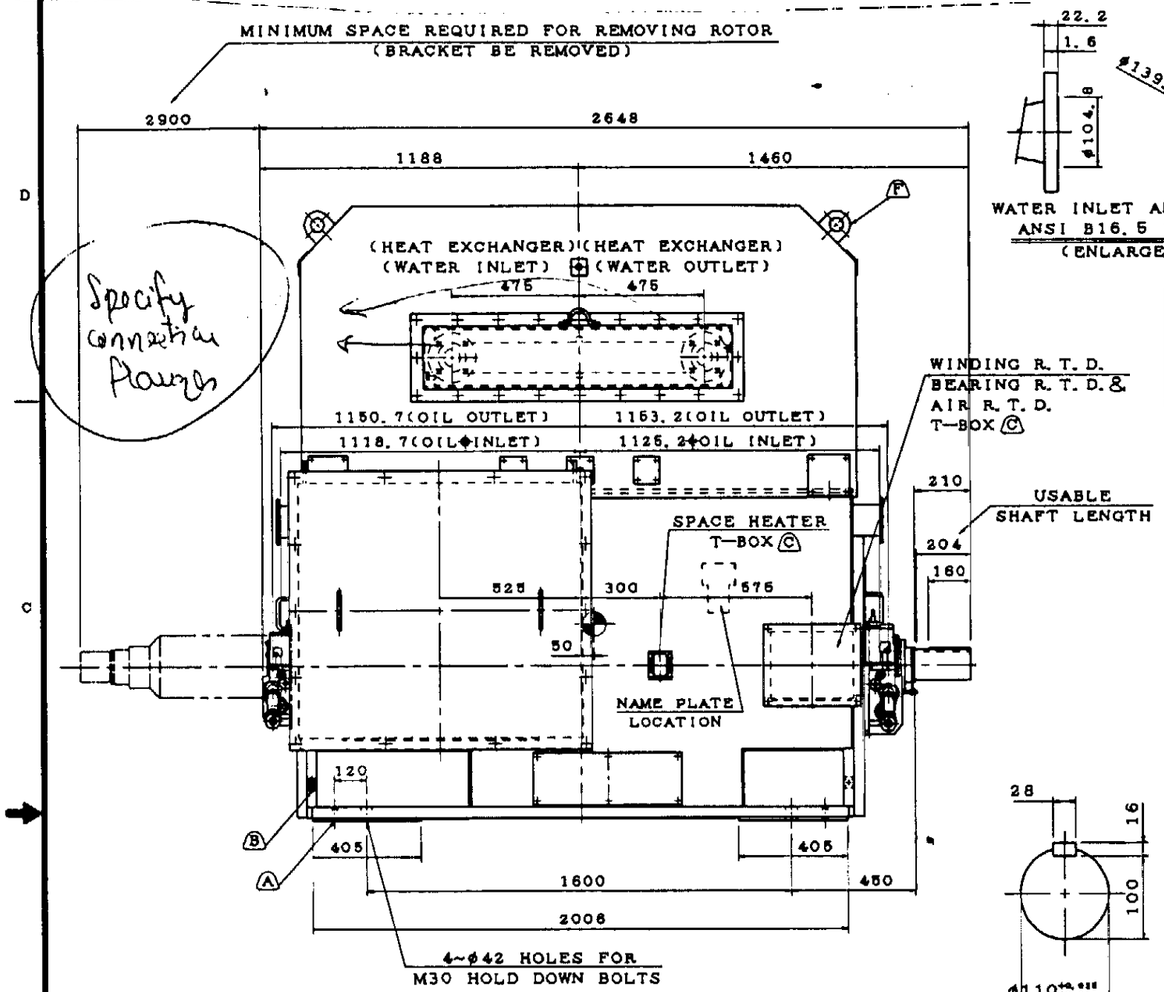

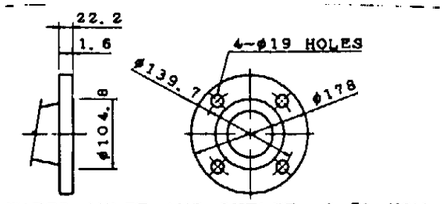

WATER INLET AND OUTLET, 2.5" NOM.
ANSI B16.5 150LB FLANGE, R.F.
(ENLARGED VIEW)

SHAFT END
(ENLARGED VIEW)

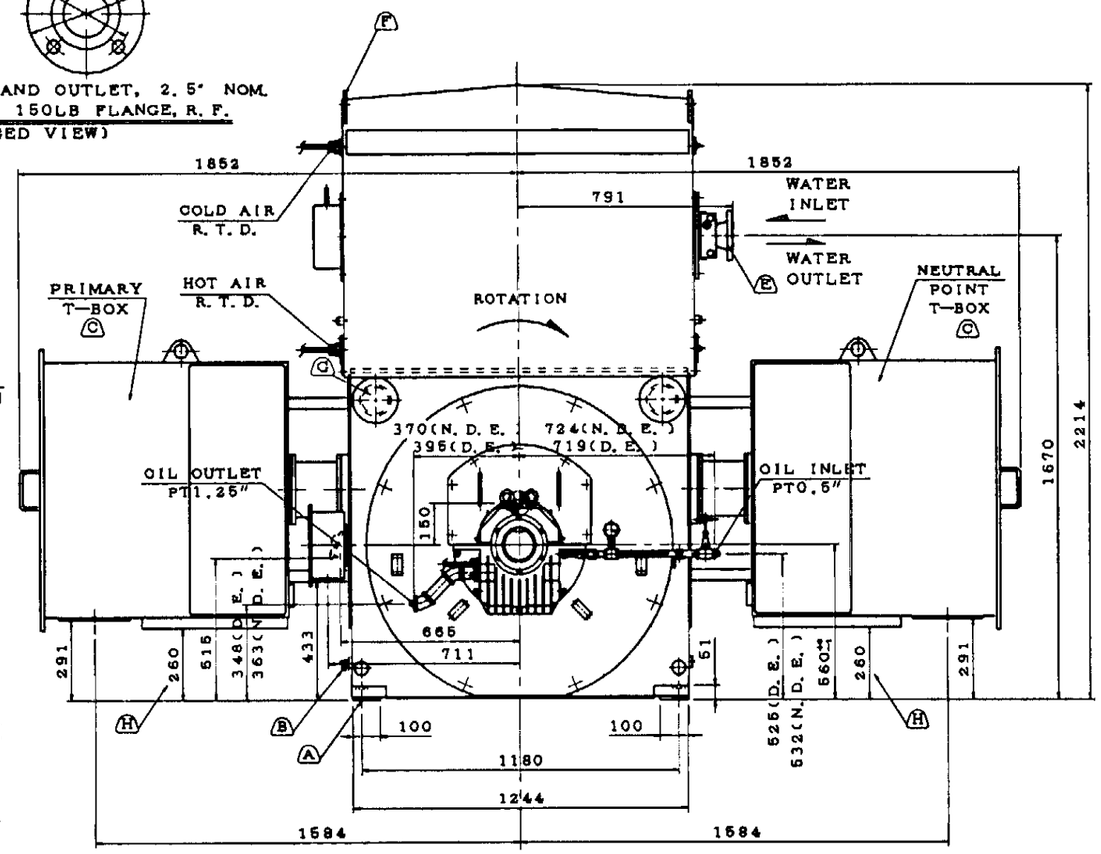

NOTE:
1. DIMENSIONS IN MM.
2. FRAME NO. 550D.
3. F CLASS INSULATION.
4. FOR DIRECT FLEXIBLE COUPLING.
5. SLEEVE TYPE BEARING, AXIAL THRUST LOAD NOT ALLOWED.
6. THE MOTOR ENDPLAY IS ±7MM. A LIMITED END FLOAT TYPE COUPLING IS REQUIRED TO LIMIT ENDPLAY TO ±2.4MM.
7. BEARING SIZE: DRIVE END: 11-110(UNINSULATED)
   NON-DRIVE END: 9-90 (INSULATED)
8. NON-DRIVE END BEARING LINER(SHELL) IS INSULATED FROM THE HOUSING. METAL CONNECTIONS MADE TO THE BEARING SHELL MUST BE INSULATED TO PREVENT AN INSULATION SHORT CIRCUIT. METAL CONNECTIONS MADE TO THE HOUSING DO NOT NEED TO BE INSULATED.
9. BEARING LUBRICATION: FORCED OIL LUBRICATION
   A. OIL VISCOSITY: ISO VG32(140-160SSU AT 100°F)
   B. OIL FLOW RATE: 1.9 L/MIN FOR EACH BEARING.
   C. OIL INLET PRESSURE: 1.0 KG/CM². MAX.
   D. OIL INLET ORIFICE DIAMETER: 1.98MM FOR EACH BEARING
   E. OIL INLET TEMPERATURE: 49°C, MAX.
10. EXTERNAL OIL SUPPLY UNIT TO BE PREPARED BY THE CUSTOMER.

Specify connection flanges

Design conditions
P = 6 barg
T = 50°C

WATER OUTLET TEMPERATURE ??

11. HEAT EXCHANGER:
   A. WATER INLET PRESSURE: MIN.: 2.5KG/CM². MAX.: 5.0KG/CM². 7.5 barg
   B. WATER INLET TEMPERATURE: MIN.: 5°C. MAX.: (32°C.
   C. WATER FLOW RATE: MIN.: 390 L/MIN. MAX.: 425 L/MIN.
   D. WATER PRESSURE DROP: LESS THAN 1.0 KG/CM².
   E. IN CASE OF DANGER OF FROST, THE WATER MUST BE PREVENTED FROM FREEZING BY APPROPRIATE MEASURES.
12. EXTERNAL WATER SUPPLY UNIT TO BE PREPARED BY THE CUSTOMER.
13. WITH SPACE HEATER: 3φ, 400V, 500W.
14. WITH WINDING R.T.D.: PT 100Ω/0°C, 6PCS.
15. WITH BEARING R.T.D.: PT 100Ω/0°C, DUAL ELEMENT, 2PCS.
16. WITH AIR CIRCUIT R.T.D.: PT 100Ω/0°C, 2PCS.
17. NOISE: BELOW 76±3dBA AT 1 METER DISTANCE NO LOAD.
18. ENCLOSURE: IP55.
19. MOTOR APPROX. WEIGHT: 7600KGS.
   ROTOR APPROX. WEIGHT: 1660KGS.
20. TWMC IS NOT RESPONSIBLE FOR FOUNDATION DESIGN. THE SUPPORT REACTIONS NECESSARY FOR FOUNDATION DESIGN ARE AS FOLLOWS —KGS PER BOLT AT CENTERLINE OF HOLD DOWN BOLT HOLES:
   STATIC X = MOTOR WEIGHT/4
   RATED MOTOR TORQUE X = MOTOR WEIGHT/4 ± 240 KGS.
   MAXIMUM MOTOR TORQUE X = MOTOR WEIGHT/4 ± 1824 KGS.

(A) M20 VERTICAL JACKING HOLE, ONE HOLE PER FOOT.
(B) TWO M10 TAPPED GROUNDING PADS ON FRAME, DIAGONALLY OPPOSITE, WITH ONLY ONE GROUNDING STUD & (R38-10) TERMINAL LOCATED AS SHOWN.
(C) REMOVABLE COVER FOR CABLE ENTRY TO BE DRILLED BY THE CUSTOMER.
(D) OIL DRAIN LINES SHOULD BE SLOPED A MINIMUM OF 45MM PER METER. FOR PROPER DRAINING, A VENT MUST BE PLACED IN THE DRAIN LINES AS CLOSE TO THE MOTOR BEARINGS AS POSSIBLE.
(E) NO PIPE WORK LOADS ARE TO BE TAKEN BY HEAT EXCHANGER CONNECTIONS.
(F) FOUR LIFTING LUGS ON AIR CABINET FOR LIFTING AIR CABINET AND HEAT EXCHANGER ONLY. DO NOT USE FOR LIFTING ENTIRE MOTOR.
(G) FOUR LIFTING LUGS ON FRAME FOR LIFTING ENTIRE MOTOR. A SPREADER BAR IS REQUIRED WHEN LIFTING MOTOR WITH AIR CABINET ATTACHED.
(H) PRIMARY T-BOX AND NEUTRAL POINT T-BOX ARE NOT SELF-SUPPORTING. CUSTOMER MUST PROVIDE SUPPORT TO THE DIMENSION SHOWN. THESE TWO T-BOXES TO BE SHIPPED LOOSE WITH MOTOR.

	NAME	DATE
DWN.	C. LEONG	AUG 17 2004
CHKD.	S. WANG	AUG 17 2004
APPD.	C. WANG	AUG 17 2004

OUTLINE DIMENSION
3-PHASE INDUCTION MOTOR

DWG NO. 3A040F289 REV: 00

TECO Westinghouse

LAVRION V CO FF
PUBLIC POWER CORPORATION
DMKT 11 21 303

METKA

OUTLINE DIMENSION
3-PHASE INDUCTION MOTOR

According to arrangement of the two pump + motor, the position of the T-box will be different, so it will be necessary two different drawings.

LAVRION
HP Boiler Feed Water Pump Motor
S LAC 10 AP001

9 CERTIFICATION

Certificates, determined from the contract requirements will be provided with the quality dossier.

10 OTHER RELEVANT DOCUMENTATION AND MANUALS

10.1 Supplementary User Instruction manuals

Supplementary instruction determined from the contract requirements for inclusion into User Instructions such as for a driver, instrumentation, controller, sub-driver, seals, sealant system, mounting component, etc. are included under this section. If further copies of these are required they should be obtained from the purchaser for retention with these User Instructions.

10.2 Change notes

If any changes, agreed with Flowserve Pump Division, are made to the product after its supply, a record of the details should be maintained with these User Instructions.

10.3 Additional sources of information

Reference 1:
NPSH for Rotordynamic Pumps: a reference guide, Europump Guide No. 1, Europump & World Pumps, Elsevier Science, United Kingdom, 1999.

Reference 2:
Pumping Manual, 9th edition, T.C. Dickenson, Elsevier Advanced Technology, United Kingdom, 1995.

Reference 3:
Pump Handbook, 2nd edition, Igor J. Karassik et al, McGraw-Hill Inc., New York, 1993.

Reference 4:
ANSI/HI 1.1-1.5
Centrifugal Pumps - Nomenclature, Definitions, Application and Operation.

Reference 5:
ANSI B31.3 - Process Piping.

Mechanical seal Manual

FLOWSERVE®

Flow Solutions Division

Mechanical Seal
General Installation Instructions

These installation instructions can be used for the following seal types:

Pusher seals: Q series, U series, D series, RO, CRO, P series, Europac 6 series, Europac 306, Allpac 4 series, Allpac N series, UHT series, DHT series, HSC, HSH, FRO, LD, HD series, SRO, Simpac 3 series, Centipac 1 series.

Bellows seals: BX series, CBR series, BXRH, BXH series, BXLS series, BL, BRC series, PB, PC, CBS, PBS, PBR, X series

Table of Contents

page no.

1. Drawing, Brief Description, Functional requirements

1.1 Assembly Drawing

The assembly drawing is included in the shipping box with the mechanical seal.

1.2 Brief Description

A mechanical seal is a device designed to seal a rotating shaft against a stationary housing, e.g. a pump shaft against a pump casing. The stationary components will consist of a seal ring and (depending on the design) a springloaded element. The spring-loaded element can be a spring or a bellows. The seal ring is sealed against the housing with a secondary gasket, e.g. an O-ring. The rotating components will consist of a seal ring and (depending on the design) a spring-loaded element.
The spring-loaded element can be a spring or a bellows. The seal ring is sealed against the shaft with a secondary gasket, e.g. an O-ring.

A mechanical seal can be supplied as a pre-assembled cartridge or in separate components. Assembly is done in accordance with the assembly drawing. A mechanical seal will run in the pumped product or external source fluid. To provide lubrication, a film of liquid must always be present between the seal faces. The sealing surfaces are separated from each other by the seal liquid film during shaft rotation and in principle operate without contact and thus minimal wear under these conditions.

1.3 Functional requirements

The proper functioning of a mechanical seal is only achieved once the following conditions have been met:

- The sealing surfaces are lapped within specification
- Perpendicularity and concentricity between the shaft and the seal chamber face and bore respectively

- Freedom of movement of the spring loaded components in axial direction
- Axial and radial shaft movements within Flowserve or OEM tolerances whichever is the tightest.
- The seal is operated under the conditions for which it was selected.
- The equipment in which the seal(s) is (are) installed is operated within normal parameters (no cavitation, excess vibration etc.)
- Prevention of sedimentation on shaft or sleeve surfaces caused by for instance crystallisation or polymerisation
- Permanent seal liquid film between the sealing surfaces

Failure to meet these requirements will result in excessive leakage and/or shortened seal life

2. Safety

Please read these instructions carefully. Installation in accordance with the following instructions will contribute to long and trouble free operation of the mechanical seal.
For related mechanical seal auxiliary equipment (reservoirs, coolers, etc.), separate instructions will be provided.

The ultimate user must ensure that personnel assigned to handle, install and operate the mechanical seal and related equipment is well acquainted with the design and operating requirements of such equipment.

Damage to any of the seal components and in particular the faces may cause (excessive) leakage in liquid or gas form. The degree of hazard depends on the sealed product and may have an effect on people and/or the environment. Components coming into contact with leakage must be corrosion resistant or suitably protected. Plant regulations concerning work safety, accident prevention and pollution must be strictly adhered to.

3 General

All illustrations and details in these installation and operating instructions are subject to changes that are necessary to improve product performance without prior notice.
The copyright of these instructions is the property of Flowserve. These instructions are intended for maintenance, Operating and Supervisory personnel and contain regulations and drawings of a technical character that may not, in full or in part, be copied, distributed, used without authorisation for competitive purposes, or given to others.
It should be understood that Flowserve does not accept any liability for instances of damage and/or malfunctioning incurred through non-adherence to these installation instructions.

4. Transport, Storage

The mechanical seal and related equipment must be transported and stored in the unopened, original shipping box. The warehouse in which the mechanical seals and related equipment are stored must be dry and free of dust.
Avoid exposing equipment to large temperature fluctuations and radiation.

Parts or complete mechanical seals that have been dropped or otherwise have been subjected to heavy impacts during transport must not be installed.
An inspection by Flowserve or its appointed representative is strongly advised

After a storage period of 3 years the mechanical seal must be inspected for its “as new” properties. This applies in particular to the seal faces and secondary sealing elements. An inspection by Flowserve becomes necessary.
If the equipment is to be preserved with the mechanical seal(s) installed, the preserving medium must not impair the function of the mechanical seal by e.g. fouling of the seal faces and/or attack the secondary seals.

5. Equipment Check

5.1 Follow plant safety regulations prior to equipment disassembly:
- 5.1.1 Wear designated personal safety equipment
- 5.1.2 Isolate equipment and relieve any pressure in the system
- 5.1.3 Lock out equipment driver and valves
- 5.1.4 Consult plant Material Safety Data Sheet (MSDS) files for hazardous material regulations

5.2 Disassemble equipment in accordance with the equipment manufacturer's instructions to allow access to seal installation area.

5.3 Remove existing sealing arrangement (mechanical seal or otherwise). Clean seal chamber and shaft thoroughly.

5.4 Verify the shaft dimensions as shown on the seal assembly drawing. Inspect surfaces under gaskets to ensure they are free from pits or scratches.

5.5 Verify the seal chamber bore or OD pilot fit as shown on the seal assembly drawing.

5.6 Check seal assembly drawings for any modifications (reworks) to be made to the equipment for mechanical seal installation and act accordingly.

Shaft runout should not exceed 0,05 mm (.002") TIR (Total Indicator Reading) at any point along the shaft for ball or roller type bearings. For sleeve type bearings, refer to manufacturer instructions.
If the equipment is not completely dismantled, verify runout near seal location.

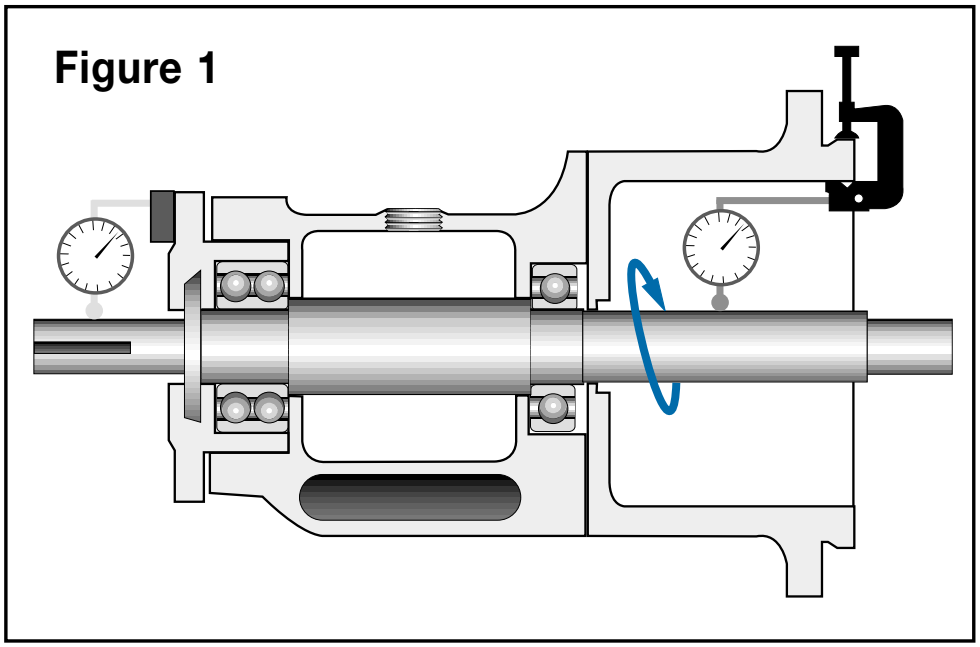

The above values apply to shaft speeds in the

range from 1000 to 3600 RPM. For values above and below, consult your Flowserve representative. See figure 1.

Shaft endplay should not exceed 0,10 mm (.004”) TIR on ball type thrust bearings. For pad type thrust bearings, refer to manufacturer's instructions. See figure 2.

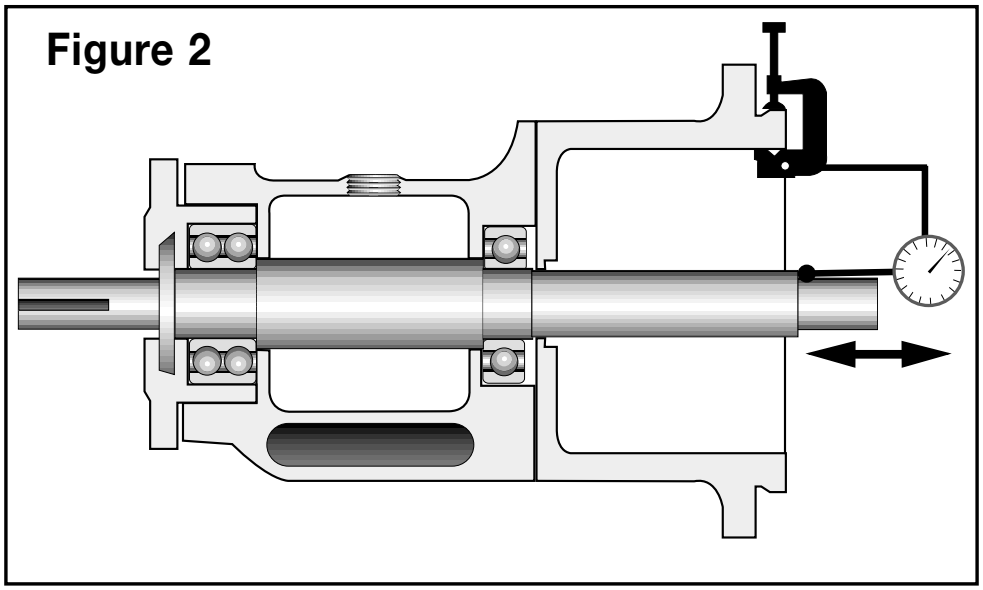

Radial shaft movement should be checked against the equipment manufacturer's specifications. Generally 0,05 - 0,10 mm (.002 - .004”) will be applicable for ball or roller type bearings. For sleeve or journal type bearings, values will generally be in the order of 0,10 - 0,15 mm (.004” - 0.006”). See figure 3.

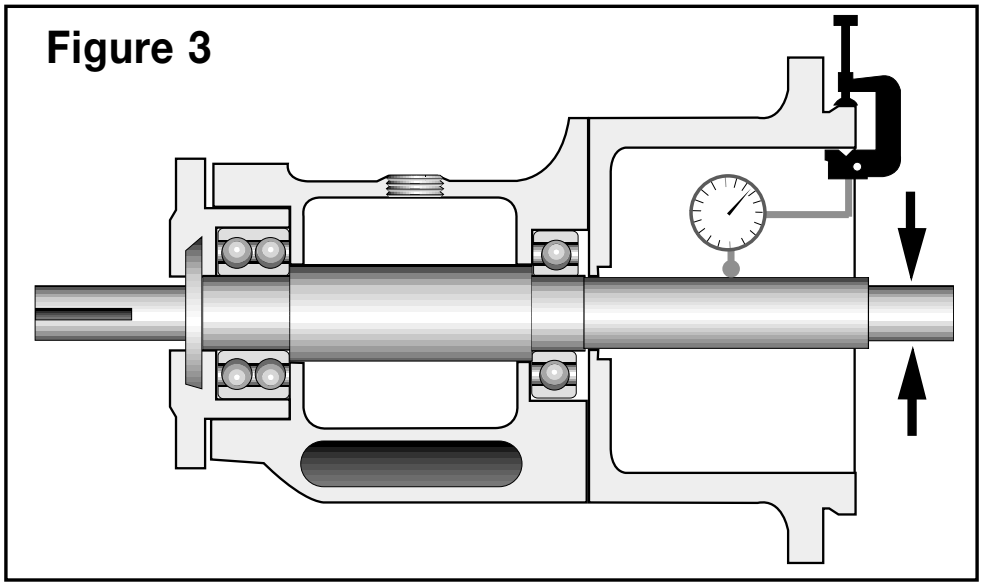

Seal chamber squareness to the shaft centreline should be within 0,015 mm per 25 mm seal chamber bore (.0005" per 1" seal chamber bore).
Note: make sure that shaft endplay does not affect the reading. Verify the smoothness of the seal chamber face for a good gasket joint.
See figure 4.

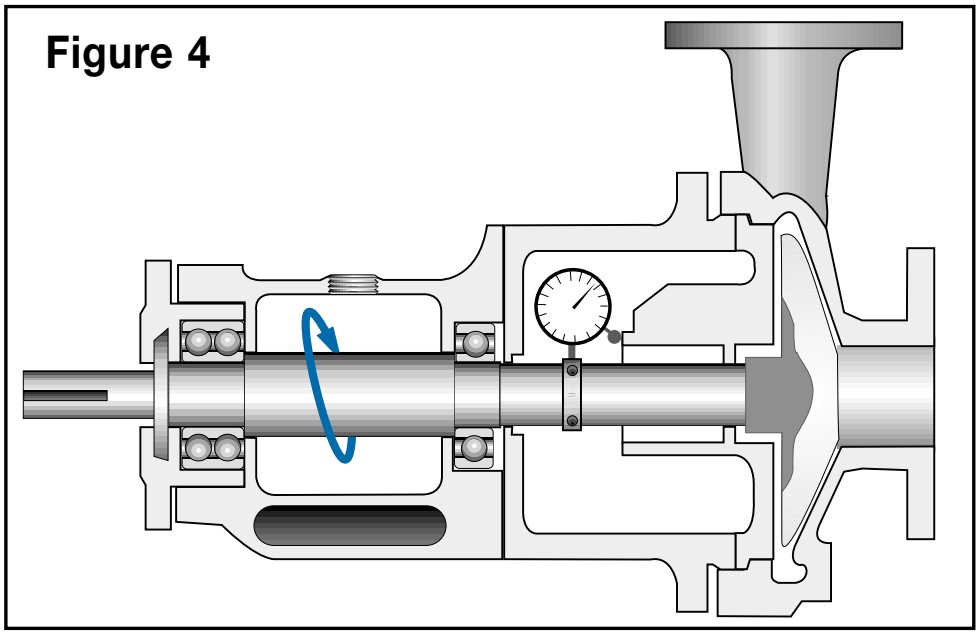

Concentricity of the shaft to the seal chamber bore should be within 0,025 mm per 25 mm shaft diameter (0.001" per 1" shaft diameter) to a maximum of 0,125 mm (0.005") TIR.
See figure 5.

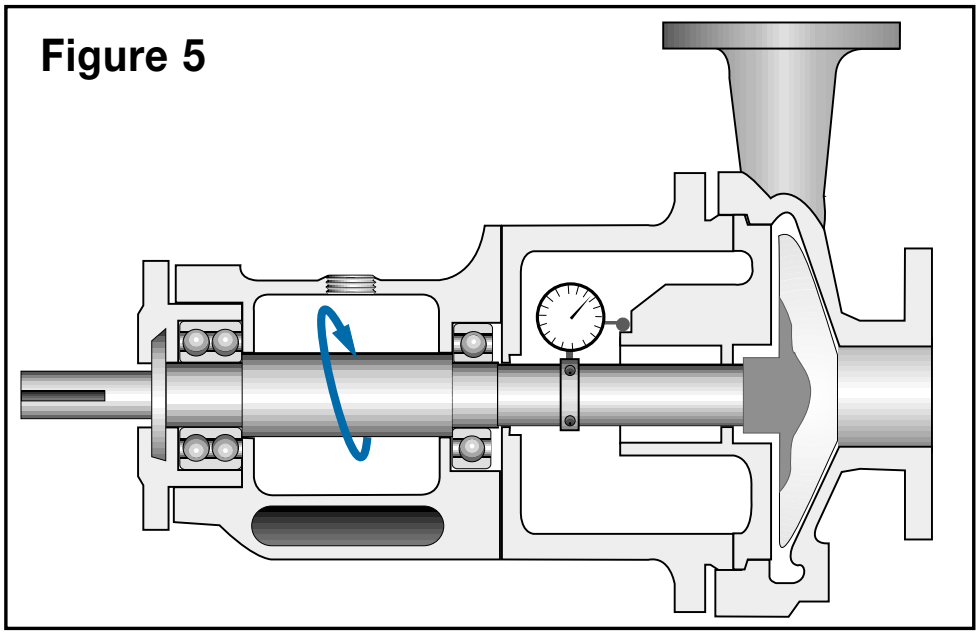

Break all sharp corners on shaft steps, threads, reliefs, shoulders, key ways, etc. over which gasket(s) must pass and/or seal against.

6. Mechanical Seal Installation

Correct seal setting is important in the successful operation of a mechanical seal. Cartridge seals unitize the complete seal assembly on a sleeve such that the entire seal is installed simultaneously. Component seals are assembled sequentially on the equipment and require careful measurements to properly locate and lock the rotating components relative to the stationary components. When measuring the setting or securing cartridge seals, always make sure the shaft is in the same position as when the equipment is operating (e.g. including the effects of thermal growth or contraction of the shaft relative to the casing).

To ease installation, gaskets may be lightly lubricated.
Lubricant must be compatible with both handled product and gasket material. Generally, silicon grease is suitable but this should be verified before applying.

Caution: avoid over compressing a bellows. This could result in reduced spring force and length.

6.1 Installation of Cartridge Type Seal with Setting Plates.

See figure 6

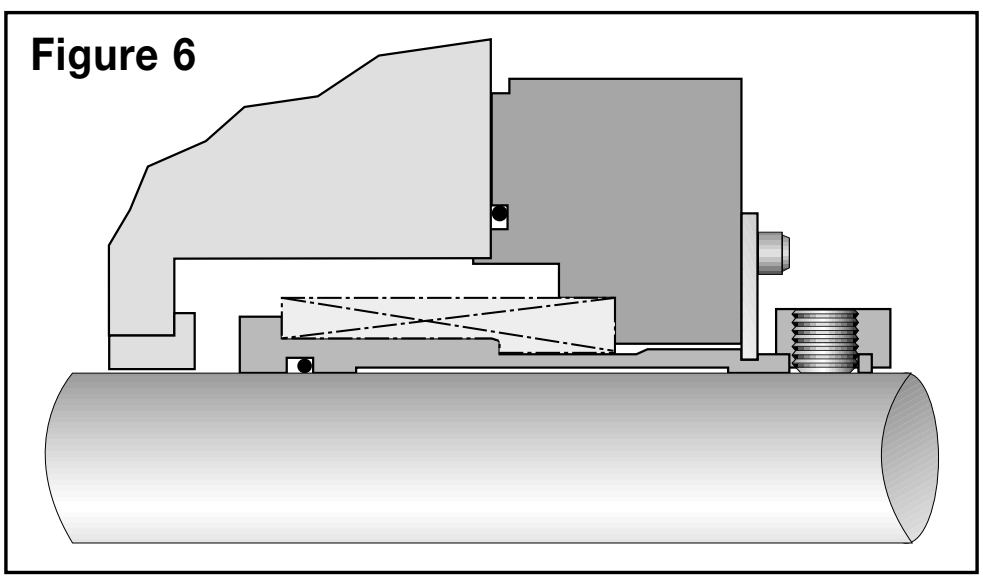

6.1.1 Check assembly drawing and seal assembly prior to installation.
6.1.2 Install the seal onto the shaft and locate against the face of the seal chamber.

6.1.3 Orient the ports on the seal flange(s) as indicated by the seal assembly drawing and connecting piping.

6.1.4 Evenly torque gland bolts/nuts to prevent cocking of the gland or uneven flange pressure against the seal chamber. Do not tighten drive arrangement screws.

6.1.5 Complete the remaining equipment assembly including thrust bearings, if applicable.

6.1.6 Ensure the setting plates are correctly located and engaged.

6.1.7 Tighten drive arrangement screws to the torque values shown on the seal assembly drawing.

6.1.8 Disengage setting plates from the sleeve and secure tightly in disengaged position.

6.1.9 Inspect equipment and driver alignment in accordance with coupling and / or equipment manufacturer's instructions.

6.1.10 After bringing the unit up to operating conditions (pressure and temperature), recheck pump to driver alignment.
Make adjustments as necessary.

6.2 Installation of a Cartridge Type Seal with Centring Tabs.

See figure 7

Figure 7

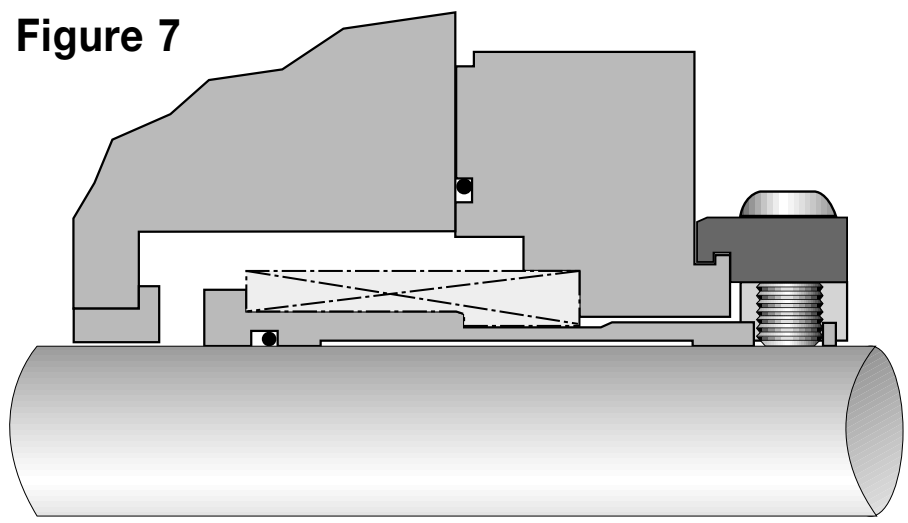

6.2.1 Check assembly drawing and seal assembly prior to installation.

6.2.2 Install the seal onto the shaft and locate against the face of the seal chamber.

6.2.3 Orient the connections on the seal flange(s) as indicated by the seal assembly drawing and connecting piping.

6.2.4 Install flange bolts/nuts, but do not tighten. The flange must be free to move radially.

6.2.5 Complete the remaining equipment assembly including thrust bearings, if applicable.

6.2.6 Ensure the centring tabs are correctly located and engaged.

6.2.7 Evenly torque flange bolts/nuts to prevent cocking of the flange or uneven flange pressure against the seal chamber.

6.2.8 Tighten drive arrangement screws to the torque values shown on the seal assembly drawing.

6.2.9 Remove centring tabs and store them in a known place.

6.2.10 Inspect equipment and driver alignment in accordance with coupling and / or equipment manufacturer's instructions.

6.2.11 After bringing the unit up to operating conditions (pressure and temperature), recheck pump to driver alignment. Make adjustments as necessary.

6.3 Installation of a Component Type Seal. See figure 8

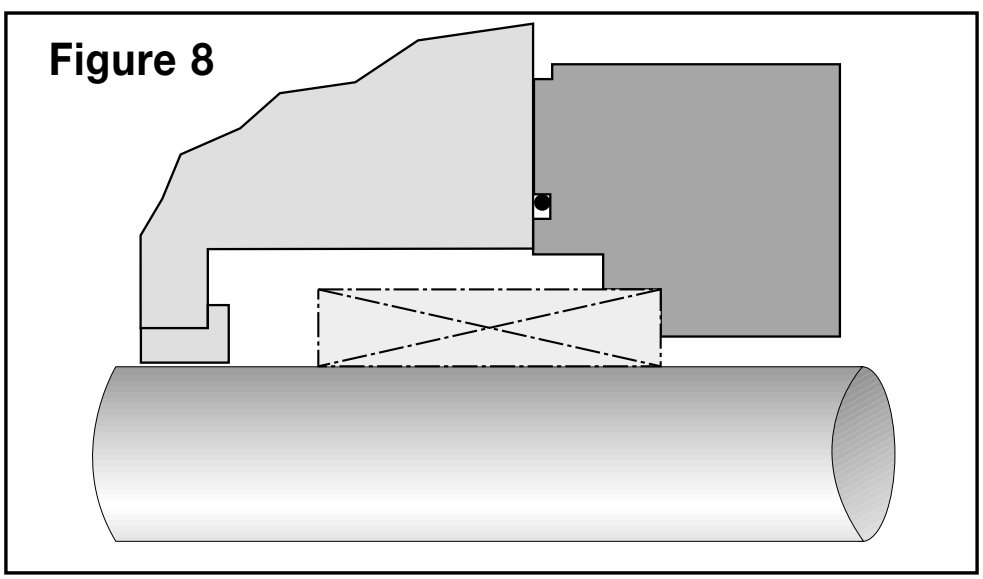

6.3.1 Check assembly drawing and seal components prior to installation. Ensure seal faces and joints are free of scratches, contamination and

other damage. Prior to installation, wipe lapped surfaces clean with a lint free cloth and quick drying solvent. Lubrication of seal faces is not recommended unless specified on the seal assembly drawing.

6.3.2 Assemble seal chamber and shaft (including thrust bearings, if applicable) and verify/scribe the seal setting distance as shown on the assembly drawing. Other setting aids such as spacer rings may be indicated on the assembly drawing.

6.3.3 When applicable, pre-assemble the rotating and stationary components or sub-components of the seal in accordance with the assembly drawing.

6.3.4 Assemble the seal components sequentially onto the equipment, fastening the rotating components. Locate the flange(s) against the face of the seal chamber.

6.3.5 Orient the connections on the seal flange(s) as indicated on the seal assembly drawing.

6.3.6 Evenly torque flange bolts/nuts to prevent cocking of the flange or uneven flange pressure against the seal chamber.

6.3.7 Complete the remaining equipment assembly including thrust bearings, if applicable.

6.3.8 Inspect equipment and driver alignment in accordance with coupling and / or equipment manufacturer's instructions.

6.3.9 After bringing the unit up to operating conditions (pressure and temperature), recheck pump to driver alignment. Make adjustments as necessary.

6.4 Installation of Seals with Hooked Type Sleeves (overhung pumps).

See figure 9

6.4.1 Check assembly drawing and seal components prior to installation. Ensure seal faces and joints are free of scratches, contamination and other damage. Prior to installation, wipe lapped surfaces clean with a lint free cloth and quick drying solvent. Lubrication of seal faces is not recommended unless specified on the seal assembly drawing.

6.4.2 Assemble seal chamber and shaft (including thrust bearings, if applicable) and verify the distance from the seal chamber face to

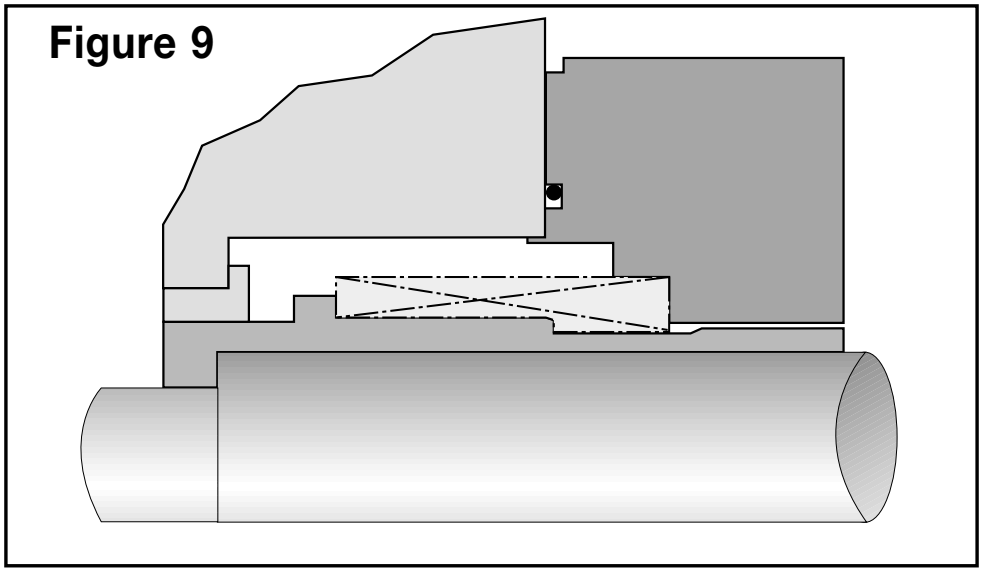

the end of the shaft as shown on the assembly drawing.

6.4.3 When applicable, pre-assemble the rotating and stationary components or sub-components of the seal in accordance with the assembly drawing.

6.4.4 Assemble the seal components sequentially onto the equipment. Locate the flange(s) against the face of the seal chamber. If applicable, install drive keys as indicated on the seal and/or pump assembly drawing.

6.4.5 Orient the connections on the seal flange(s) as indicated by the seal assembly drawing and connecting piping.

6.4.6 Evenly torque flange bolts/nuts to prevent cocking of the flange or uneven flange pressure against the seal chamber.

6.4.7 After the impeller nut is properly torqued, check that the sleeve is completely seated

6.4.8 Complete the remaining equipment assembly including thrust bearings, if applicable.

6.4.9 Inspect equipment and driver alignment in accordance with coupling and / or equipment manufacturer's instructions.

6.4.10 After bringing the unit up to operating conditions (pressure and temperature), recheck pump to driver alignment. Make adjustments as necessary.

7. Piping Instructions

Piping instructions are detailed on the mechanical seal assembly drawing. These instructions must be followed precisely to ensure correct seal operation. For auxiliary systems: carefully read the operating instructions provided with the system.

Minimize restrictions, especially in closed loop piping arrangements. Unless otherwise specified, the minimum internal diameter for pipe, tubing and connecting hardware should be 12,7 mm (.500”).

Total pipe length and number of bends should be kept to a minimum. Use smooth, large radius bends; do not use elbows, tees, etc. Orifices should be installed as far away from seal flange as possible. An exception to this rule should be made for orifices fitted to drain piping. To avoid clogging of the orifice it is advisable to install it in the seal flange so that the generated heat will serve to keep the leaked product fluid.

For “loop type” systems:
Pipe runs should be sloped continuously up or down to allow adequate circulation, proper venting and draining. Make sure that the loop, including seal flange, does not include vapor traps. Unless otherwise specified, reservoirs and coolers must be mounted 40 to 60 cm (15” to 24”) above the seal inlet or outlet connection, whichever is the highest, to promote thermosyphoning in standby condition.

Seals equipped with excess leakage detection:
Excess leakage detection, often used with single or non-pressurized dual seals, is commonly achieved by monitoring liquid level or pressure increases. With such an arrangement, the drain line for normal leakage must slope downward continuously to the point of exit (e.g. sump). Refer to the seal assembly drawing for additional piping requirements including the proper location of the restriction orifice and instrumentation.

8. Performance Testing of Pumps

Pump manufacturers will often perform pump performance tests on water with the mechanical seal installed. Some seal designs and face materials require special precautions to prevent damage to the seals during these tests.
For example, on seals with two hard faces, the seals may be provided with faces in alternate materials more suitable for the pump test medium. These faces are to be replaced with faces in the selected materials at the conclusion of the testing.

When high temperature seals with graphoil gaskets are tested on water during a pump performance test, the seals must be carefully dried after the test to prevent vaporization of water absorbed by the gaskets when the pump is brought to its (high) operating temperature.

Contact your Flowserve representative for additional information.

9. Operational Recommendations

9.1 The pressure and temperature in the seal chamber or of the barrier fluid must not exceed the recommended maximum seal limits. The shaft speed must also not exceed the seal's limits.

9.2 For seals using external cooling and/or an external flush, apply cooling and / or flush prior to seal start-up.

9.3 Single and dual non-pressurized (tandem) seals require adequate vapor pressure margin in the seal chamber to prevent flashing of the product at the seal faces.

9.4 Dual non-pressurized (tandem) seals require the buffer fluid pressure to be maintained at a value lower than the seal chamber pressure.
Buffer fluid pressure is usually equal to atmospheric or vapor recovery system pressure, unless otherwise specified.

9.5 Dual pressurized (double) seals require the barrier fluid pressure to be maintained at least 2 bar 30 psi) above the seal chamber pressure, unless otherwise specified. It is imperative to pressurize the barrier prior to pressurizing the equipment. Likewise, do not de-pressurize the barrier system until the equipment has been fully isolated, depressurized and vented.

9.6 If dual non-pressurized (tandem) seals are operated on a non volatile product, the primary seal leakage will not evaporate, resulting in contamination of the buffer fluid. Because the level in the reservoir will rise over time, periodically drain the reservoir to the "safe minimum level" as indicated on the reservoir or instructions and refill with fresh buffer fluid.

9.7 Flowserve can supply information on barrier fluid temperature and flow requirements based on product type, seal size, product temperature, barrier fluid characteristics and shaft speed.
Ensure that the barrier fluid is clean and compatible with the product.

9.8 This seal is designed to resist corrosion by the product(s) listed on the assembly drawing. Do not expose the seal materials to products other than those shown on the assembly drawing. The seal assembly drawing lists the materials of construction. Consult your Flowserve representative when in doubt or when using the seal for another application than for which it was selected.

9.9 Do not start the equipment dry (unless the seal is designed to operate in a gas). Open valves to flood equipment with product. Vent all air and/or product vapor from the equipment casing and the seal chamber before start up. Vent casing and tubing of heat exchange (if applicable). Process fluid must flood and pressurize the seal chamber at all times for single seal and non-pressurized dual seals. Barrier fluid must flood dual seals at all times during equipment operation.

9.10 Dual seals may be pressurized by means of a piston type pressure transmitter. Do not completely fill the transmitter at the time the equipment is taken into service. Always allow room for the piston to move downward (toward the “full” position) to avoid over pressurizing the seals. When the transmitter is filled to the limit, the piston will “bottom out” thus

creating a “ridged system”. Heat conducted from the equipment and/or generated at the faces will cause a rise in temperature of the barrier fluid causing it to expand. Failure to comply can result in pressures way beyond the capability of the seal(s).

9.11 When required, dry steam should be applied to the quench connection. Use a needle valve (or other flow restriction) to provide 0.1 bar (1 to 1.5 psi) steam to the quench connection on the seal flange. This should result in wisps of steam exiting the seal flange area. Ensure that all condensate is drained from the supply line and open the steam quench slowly before the pump is preheated to prevent thermal shock.

9.12 Start up equipment in accordance with normal operating procedures unless specifically requested otherwise by Flowserve.

If the equipment is not operating properly (e.g. seals and/or bearings running hot, cavitation, heavy vibration, etc.), shut down the equipment, investigate and remove the cause.

10. Shut down, disassembly

The equipment can be shut down at any time. Before the mechanical seal can be removed the equipment and de-pressurized. Barrier pressure (if applicable) must be relieved after the equipment has been de-pressurized.

Product may be released during removal of the mechanical seal. Safety measures and protective clothing may be required as per the plant’s safety regulations.

Further disassembly of the mechanical seal must be done according to the supplier’s specifications.

11. System check

Checking of the system, limits itself to monitoring pressure, temperature, leakage and consumption of barrier (buffer) fluid, when applicable.

12. Spare parts, repairs

This mechanical seal is designed to provide reliable operation under a wide range of operating conditions. However, repairs will be necessary when the seal reaches the end of its normal life expectancy or when it has been operated outside of its design capabilities.

This product is a precision sealing device. The design and dimensional tolerances are critical to seal performance. Only parts supplied by Flowserve should be used to repair this seal. These are available from the numerous Flowserve stocking locations.
To order replacement parts, refer to the part code, order number or B / M number, which can be found on the assembly drawing.
It is recommended to keep a spare seal on stock to reduce equipment downtime.

All liabilities and warranties to Flowserve for damage incurred through the use of non-original replacement parts and accessories will be rendered null and void.

Please note that special manufacturing and delivery specifications exist for all parts of our products manufactured or produced by ourselves and the replacement parts are always offered in accordance with the latest technology and with the most current regulations and laws.

Flowserve seals can normally be reconditioned. When repair is necessary, the seal should be carefully removed from the equipment (reinstall the centring tabs or setting plates if applicable).

Decontaminate the seal assembly and return it to a Flowserve authorized repair facility with an order marked “Repair or Replace”. A signed certificate of decontamination must be attached.

A Material Safety Data Sheet (MSDS) must be enclosed for any product that came in contact with the seal. The seal assembly will be inspected and, if repairable, a quotation will be made for restoring it to its original condition. Upon acceptance of the quotation, the parts will be rebuilt, tested, and returned to sender.

The information and specifications presented in this product brochure are believed to be accurate, but are supplied for information purposes only and should not be considered certified or as a guarantee of satisfactory results by reliance thereon. Nothing contained herein is to be construed as a warranty or guarantee, express or implied, with respect to the product. Although Flowserve Corporation can provide general application guidelines, it cannot provide specific information for all possible applications.
The purchaser/user must therefore assume the ultimate responsibility for the proper selection, installation, operation and maintenance of Flowserve products. Because Flowserve Corporation is continually improving and upgrading its product design, the specifications, dimensions and information contained herein are subject to change without notice.

FLOWSERVE®

Flow Solutions Division

MAJOR EUROPE, AFRICA & MIDDLE EAST CONTACTS

AUSTRIA, Sieghartskirchen, (43) 2274-6991. **BELGIUM,** Antwerpen, (32) 3-5460450. **DENMARK,** Allerød, (45) 48 176500. **FRANCE,** Courtaboeuf, (33) 1-69592400, Martigues,(33) 4-42-130270. **GERMANY,** Dortmund, (49) 231-6964-0. **ITALY,** Cormano (Milano), (39) 02-61558.1, Sicily, (39) 0931-994-770. **KINGDOM OF SAUDI ARABIA**, Al Khobar, (966) 3-857-3150. **THE NETHERLANDS,** Roosendaal, (31) 165-581400. **POLAND,** Katowice, (48) 32-252-8944, Warszawa, (48) 22-844-7108. **RUSSIA,** Moscow, (7) 095-737 0184. **SWEDEN,** Göteborg, (46) 705 24 7181. **SPAIN,** Tarragona, (34) 977-544400. **SWITZERLAND,** Oensingen, (41) 62-3883088. **UNITED ARAB EMIRATES (U.A.E.),** Abu Dhabi, (971) 2-317141. **UNITED KINGDOM,** Manchester, (44) 161-8691200.

WORLDWIDE HEADQUARTERS

UNITED STATES OF AMERICA 222 West Las, Colinas Blvd, Suite 1500 Irving, TX 75039 Dallas (1) 972-443-6500.

FIS 144 EUR
ORG 402 EUR

www.flowserve.com

Coupling Manual

ISO 9001
DNV
ACCREDITED BY ENAC
CERTIFICATED FIRM

All steel disc coupling

JAURE®

Lamidisc®

Installation, alignment and maintenance instructions.

Installation of hubs . Machinery alignment. Installation of disc packs and spacer.

1.- Installation of the hubs on the machine shafts.

a) Straight shafts with keyway.
Jaure supplies Lamidisc hubs machined machined with **H7** (ISO-286) tolerances. Jaure recommends that the shaft should be machined for an interference fit, using tolerance **s6** (ISO-286).

Whenever the shafts are already machined with a different tolerance from s6, Jaure will customize the hub bores. The following tolerances are recommended by Jaure.

Shaft tolerance	Hub tolerance
h6	**T7**
k6	**R7**
m6	**P7**
n6	**N7**
p6	**M7**

b) Clamping devices.
When clamping devices, such as tapered bushings, are used, Jaure recommends that the shafts should be machined with **g6** tolerances, for a standard Lamidisc bore.

For other type of connections, please consult our Technical Department.

2.- Machinery Alignment.
As long as the machines are aligned within the specifications from this catalog, the Lamidisc couplings will operate for a long time. However, it should be understood that the useful life of any disc pack coupling is directly influenced by the operating misalignment: the better the alignment, the longer the coupling life.

Although the Lamidisc couplings can operate satisfactorily at the misalignment listed in the catalog, both the coupling life and machine bearing wear can be greatly improved if the machines are aligned better than the maximum that the coupling can accomodate. Jaure recommends that the installation misalignment should not exceed 20 % of the catalog values. Therefore, the following formulas show Jaure´s recommendations for maximum misalignment.

Three types of machine misalignment (offset, angular, and axial) should be checked. Jaure has the following recommendations:

• The maximum offset misalignment that the Lamidisc coupling can accomodate is a function of the distance between the disc packs. For the configurations SX this distance is practically the same as the distance between the shaft ends. This statement is not valid for other configurations, such as CC, DO, CX, DX.

If shafts have an offset misalignment with minimum angular misalignment, the following maximum values for the offset are applicable for installation.

Lamidisc® with 6 bolts	TIR = (disc pack to disc pack distance) / 150
Lamidisc® with 8 bolts	TIR = (disc pack to disc pack distance) / 300
Lamidisc® with 10 bolts	TIR = (disc pack to disc pack distance) / 350

(NOTE : TIR is the Total Indicator Reading, which is twice the shaft offset)
Ex.: For size 380-6, SX type: TIR < DBSE/150.

• The maximum angular misalignment at each disc pack during installation is listed in the tables. This angular misalignment can be verified by measuring the flange-to-flange distance (see figure below) and substracting the smallest reading from the largest reading (Y-Z). The maximum value of (Y-Z) depends on the flange diameter, therefore on the coupling size. Based on the data from the tables, the following maximum values for (Y-Z) are recommended:

Lamidisc with 6 bolts	(Y-Z) = Coupling size / 300
Lamidisc with 8 bolts	(Y-Z) = Coupling size / 600
Lamidisc with 10 bolts	(Y-Z) = Coupling size / 750

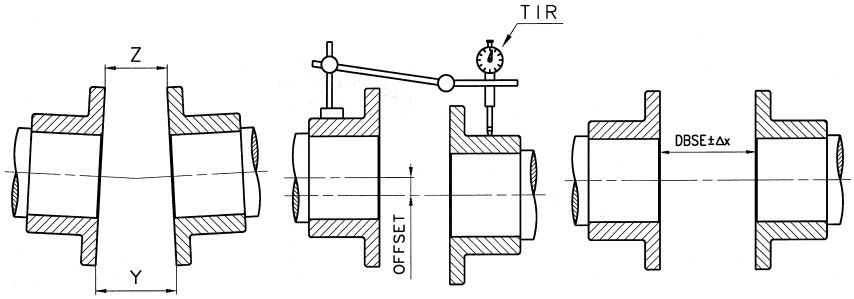

Example: For Lamidisc size 380-6 (maximum angular misalignment of 1º). (Y-Z) should not exceed 380/300 = 1.27 mm. during installation.

• The axial displacement allowable between shafts during installation (Δx), should not exceed 20% of the allowable displacement given in the catalog (Δka) (See table 1). This displacement is a function of the coupling size and the number of bolts utilized. The larger the size the larger axial displacement.
The axial displacement creates large stresses in the discs. For a long life it is recommended that the discs are as close as possible to being flat. Therefore, the movements of the shafts as caused by thermal expansion should be carefully considered. For instance, if the distance between shaft ends changes by 5 mm (the shafts are coming closer to each others) from cold to hot machines, the distance between shaft ends with cold machines should be intentionally be made larger by 5 mm when the coupling is installed.

Table 1. Allowable installation axial displacement (20% of catalog valves, Δx=0.2Δka).
This value can be added or subtracted from the nominal DBSE. Values for 2 disc packs.

	(±) Δx installation (mm.)
6 Bolts	**OD/250**
8 Bolts	**OD/375**
10 Bolts	**OD/500**

Coupling OD in (mm.)
Example: Size 228-6:±Δka = 228/250 = ±0.9 mm, for 2 disc packs during installation.

3.- Installation of disc packs and spacer.
The installation of the coupling components depends of the type Lamidisc coupling: the only tool needed are regular wrenches or sockets, and a torque wrench. **Tightening the bolts of a coupling to specification is very important.**

a) Standard configuration. SX and SXR types.
The only bolts to be installed and tightened are the ones that attach the disc packs to the hubs and spacer. Place the spacer and install the bolts with their heads at the flange and not at the disc pack. The nuts shall be turned with the torque wrench, while the heads of the bolts are held stationary.

Table 2. Bolt tightening torque values.
In case an specific exists, refer to the values mentioned in it if they differ from the values below.
Values for Disc bolt tightening torque:

Size	Disc bolt non-lubricated tightening torque (Nm)	Size	Disc bolt non-lubricated tightening torque (Nm)	Size	Disc bolt non-lubricated tightening torque (Nm)
110	30	302	600	540	4100
132	30	325	600	570	5100
158	60	345	780	605	6200
185	100	380	1100	635	7900
202	150	410	1500	675	9900
228	230	440	2000	700	12200
255	450	475	2600	730	12200
278	450	505	3300	760	14800

NOTE: For lubricated threads reduce the given values by 20%.
For stainless-steel bolts refer to our technical Dep.

Values for dry tightening torque in Nm for flange connecting bolts.
Types DO-6 and DO-8.

Size	Bolt tigthening torque (Nm)	Size	Bolt tigthening torque (Nm)	Size	Bolt tigthening torque (Nm)	Size	Bolt tigthening torque (Nm)
110-6	35	302-6	780	278-8	108	475-8	660
132-6	35	325-6	780	302-8	108	505-8	660
158-6	69	345-6	580	325-8	325	540-8	760
185-6	120	380-6	780	345-8	325	570-8	760
202-6	190	410-6	1000	380-8	325	605-8	760
228-6	295	440-6	1500	410-8	565		
255-6	580	475-6	2000				
278-6	280	505-6	2000				

NOTE: For lubricated threads reduce the given values by 20%.
For stainless-steel bolts refer to our technical Dep.

Values for spacer (type CX) and flange (type DX) bolt non lubricated tigthening torque in Nm.

Size	CX and DX types	Size	CX and DX types
132-6/10	8	302-8/40	230
158-6/15	20	325-8/45	230
185-6/20	68	345-8/50	325
202-6/25	108	380-8/55	325
255-6/30	108	410-8/60	325
278-8/35	230	540-8/70	565

Table 3. l_1, l_2 and s catalog valves for CC, CCR types.

Size	l_1 - l_2	s	Size	l_1 - l_2	s
110	50	8.4	302	135	24.4
132	60	8.4	325	145	26
158	70	11.2	345	155	28.2
185	80	14.0	380	170	32
202	90	15.5	410	185	33.2
228	100	17.5	440	195	36.4
255	115	20.5	475	210	38.2
278	125	21.2	505	230	42

b) Close coupled configuration. CC and CCR types.
The CC coupling type was created for use with machines that have the shafts too close for the use of the standard SX coupling. The outside diameter of the hubs was reduced to be inserted in the inside of the hole of the disc pack.
To install the hubs on their shafts, the shafts must be spaced apart at least the length of one hub (see dimension l_1 and l_2 in table 3). To install the coupling, the disc packs can be first attached with their bolts to the spacer, and then slid over one of the hubs, and attached to it. Next, the machines must be brought in position so that the second disc pack can be attached to its hub.
The machine alignment can now be performed. Because the spacer covers the shaft ends, the axial spacing must be checked by measuring the flange to flange distance (dimension "S" in the table 3). The offset and angular misalignments can be checked as previously described.
The bolts that attach the disc packs to the hubs and spacer must be tighten to specification, using a torque wrench at the nuts, while the bolts heads are held stationary.

c) Drop-out configuratio . DO type. *(See table 4 in page 4).*
The drop-out configuration allows the installation and removal of the coupling assembly , without the need to remove the hubs from their shafts. The coupling is received from Jaure fully assembled, with the bolts tightened to specifications. If, however, there is a need to disassemble the coupling assembly in case the disc packs need to be replaced) the nuts should be tightened to Jaure's specification (valves not shown in these instructions) using a torque wrench, while the bolt heads are held stationary.
The coupling assembly will not fit between the hubs, as long as the shaft-to-shaft distance was correctly set. The coupling ends should be brought together, by compressing the disc packs using the flange screws in the shipping holes, so that the assembly will fit between the male rabbets.
Once in position, the coupling will snap in place, and the bolts that attach the assembly to the shaft hubs must be tightened to Jaure specifications (see table 2) using a torque wrench. This operation must be carefully performed, as these bolts transmit the full coupling torque.
Machine alignment should be done before the coupling assembly is in place.
To remove the coupling assembly first remove all the bolts that retain it to the shaft hubs. Then compress the assembly by introducing the existing flange bolts in the shipping holes, and press the coupling assembly away from the male rabbets.

d) Reduced moment coupling with spacer according to AGMA 516, CX type.
The reduced moment configuration is used whenever the shaft stresses require that the center of gravity of the coupling is very close to the machine bearings. This configuration also allows either machine to be removed by dropping the spacer, without the need to disturb the disc-pack assemblies.
The installation of this coupling requires the following steps:
- Install the hubs on their shafts.
- Measure and adjust the shaft to shaft (DBSE) distance.
- Align the machine shafts as previously described.
- Attach one disc pack and a short sleeve at each hub, by tightening the nuts to specifications, while holding the bolt heads stationary.
- Place the spacer between the two sleeves. It should fit without interference, or without a gap remaining between the flanges. Correct the machine spacing if necessary, as any axial displacement can adversely affect coupling´s long term performance.
- Insert the flange bolts and tighten the nuts to specifications using a torque wrench and adaptor, while holding the bolt heads stationary.
- Recheck the alignment, and correct if necessary.

e) Drop-out coupling with floating assembly, flanges according to AGMA 516, DX type.
The drop-out configuration allows the installation and removal of the coupling assembly, without the need to remove the hubs from their shafts. The coupling is received from Jaure fully assembled, with the bolts tightened to specifications. If, however, there is a need to disassemble the coupling assembly (in case the disc packs need to be replaced) the nuts should be tightened to specification using a torque wrench, while the bolt heads are held stationary.
The coupling assembly will fit between the hubs, as long as the shaft-to-shaft distance was correctly set. Once in position, the nuts that attach the assembly to the shaft hubs must be tightened to specifications using a torque wrench and adaptor, while the bolt heads are held stationary. This operation must be carefully performed, as these bolts transmit the full coupling torque.
Machine alignment should be done before the coupling assembly is in place.

Coupling Lamidisc®

Table 4, DO type.

DO Type with STANDAR HUB

Mounting and dismounting instructions.

Mounting

1 - Shipping position.

2 - Remove the flange bolts.

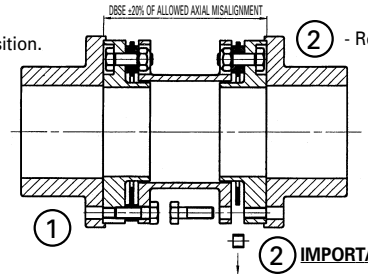

IMPORTANT: Remove shipping bushings for instalation. (when supply, only big couplings).

3 - Introduce the flange bolts in the shipping holes in order to compress the central element and save the guiding rabbets.

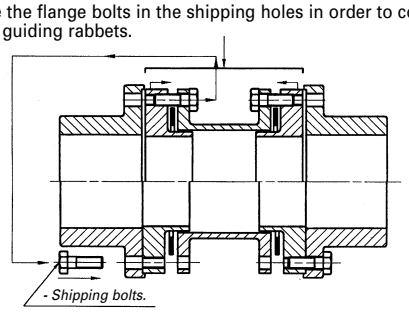

4 - Bolt up with the recomended tightening torque.

5 - Work position.

Dismounting

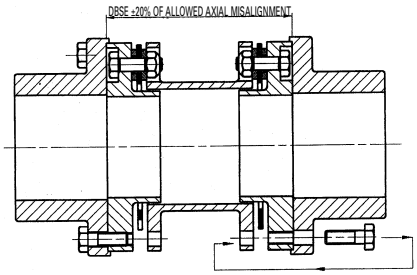

1 - Work position.

2 - Remove flange bolts.

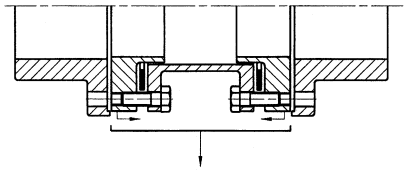

3 - Introduce the flange bolts in the shipping holes in order to compress the central element.

DO Type with JUMBO HUB

Mounting and dismounting instructions.

Mounting

1 - Shipping position.

2 - Remove the long and short flange bolts.

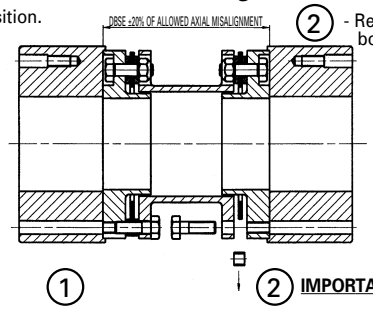

IMPORTANT: Remove shipping bushings for instalation. (when supply, only big couplings).

3 - Introduce the shipping-dismounting bolts (short bolts) in the shipping holes in order to compress the central element and save the guiding rabbets.

- After remove shipping bolts and store in screw bores of the hubs.

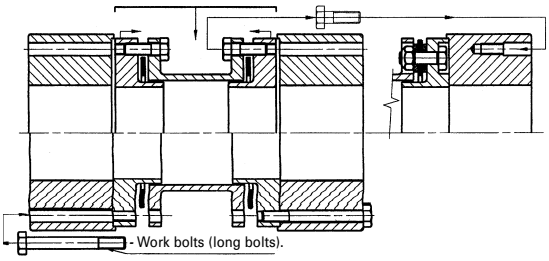

4 - Bolt up the long bolts with the recomended tightening torque.

5 - Work position.

Dismounting

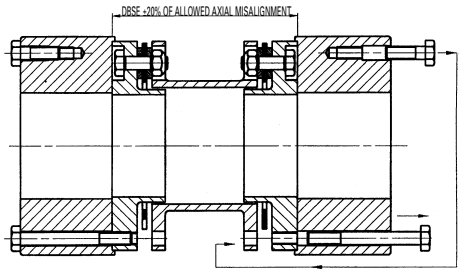

1 - Work position.

2 - Remove flange bolts (long bolts) and shipping-dismounting bolts (short bolts).

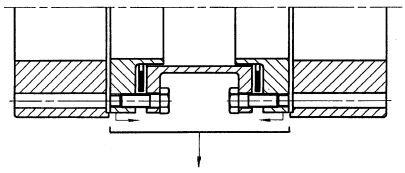

3 - Introduce the shipping-dismounting bolts (short bolts) in the shipping holes in order to compress the central element.

JAURE, S.A.

Ernio bidea, s/n - 20150 ZIZURKIL (Guipúzcoa) SPAIN
Tel./Phone: +34 943 69.00.54 - Fax: +34 943 69.02.95
Código Postal/Post address: 47 - 20150 VILLABONA (Guipúzcoa) SPAIN
e-mail:sales.dep@jaure.com - http://www.jaure.com

Motor
Manual

TECO Westinghouse

TECO ELECTRIC EUROPE LIMITED

Installation and Maintenance Instructions for Induction Motors

Up to 600kW

Installation and Maintenance Instructions

TECO Induction Motors up to 600kW

BEFORE INSTALLATION & USE

1. Ensure nameplate data corresponds with your requirements
2. Ensure the motor is undamaged
3. Remove any shaft clamp (but refit prior to transportation)
4. Slowly rotate the shaft to ensure free movement
5. Ensure the mounting/shaft orientation design and drain hole positions are correct for the application

WARNING

The following safety precautions must be observed:

1. Electric rotating machinery and electricity can cause serious or fatal injury if the motor is improperly installed, operated or maintained. Responsible personnel must be fully trained to understand the hazards to themselves and others before being involved in installing, operating, maintaining and decommissioning electric motors. European Union Safety information can be obtained from such as:
   BS4999; EN 60204-1; EN292; EN294

   IEE Wiring Regulations
   Particular industries and countries have further safety requirements. Refer to their trade & safety bodies, British Standards Institution, Dept of Trade & Industry, etc., for further information. For instance, in the USA, refer to NEMA MG2, the National Electrical Code, local safety requirements etc.

2. When servicing, all power sources to the motor and to the accessory devices should be de-energised and disconnected and all rotating parts at standstill.

3. Lifting means, such as eyebolts, on the motor are for lifting only the motor itself. Assemblies which are not part of the motor must be removed prior to using the motor lifting means. When more than one lifting means is provided on the motor, all must be used together, for instance by attaching a supporting chain to each, to share the load. Ensure that lifting means are fully attached to the motor before lifting.

4. Suitable ear protection must be worn near machinery emitting high audible noise to reduce the noise reaching the ear to a safe level.
   Expect sound pressure levels above 85dB at 1 metre from TECO model AEEB standard motors connected to a 50Hz supply as follows:
   2 pole - 37kW and above
   4 pole - 90kW and above

   Noise generally increases with frequency. Refer to TECO for noise levels at other poles and frequencies. Refer also for noise levels from other models and particular motors where for instance TECO have provided additional silencing.
   Refer to BS EN 60034-9:1994 for further information on noise from rotating electrical machines

5. Safety guards and other protective devices must neither be bypassed nor rendered inoperative.

6. The motor must be earthed. Refer to relevant standards such as EN60204-1, IEE Wiring Regulations etc.

7. A suitable enclosure must be provided for the motor to prevent access to moving parts. Extra caution should be observed around a motor that is automatically started or has automatic resetting relays or is remotely started in case such starting means has not been properly disabled and the motor starts unexpectedly.

8. Ensure all shaft keys present on moving parts are fully captive before the motor is started.

9. Ensure adequate safeguards have been made to protect against the consequences of a brake failure, particularly on applications involving overhauling loads.

10. TECO UL listed explosion proof motors must only be used in countries where the UL certification is recognised as being appropriate for the application. They are constructed to comply with the label service procedure manual and any repairs to them must be made by TECO or a UL listed service centre in order to maintain the UL listing.

11. When using a motor in a variable speed application ensure that it will not be driven above its safe maximum speed limit. Consult TECO if in doubt. Also ensure the motor is not overloaded: It should be remembered that as speed reduces, fans driven by the main shaft do not provide as much cooling air and an auxiliary fan may be required.

12. Protect the motor from overload, preferably by monitoring the winding temperature. TECO can fit thermistors to give indication that the winding is getting too hot and the thermistors can be connected to switchgear that will automatically trip on the signal from the thermistors.

13. Capacitors such as in single phase motors may remain charged even when isolated from the mains supply. Discharge capacitors and earth their terminals before handling any connections.

LOCATION

1. Drip proof motors are intended for use where the atmosphere is relatively clean, dry, well ventilated and non-corrosive. Refer to BS 4999 Part 105 for more detailed information on suitability of a particular enclosure rating.

2. Totally-enclosed motors may be installed where dirt, moisture or dust are present and in outdoor locations. Refer to BS 4999 Part 105 for more detailed information on suitability of a particular enclosure rating.

3. Explosion proof motors have many different categories because hazardous atmospheres can consist of many different gases which may or may not be present continuously. Individual countries/users can differ in their safety requirements so the suitability of an explosion proof motor for any particular hazardous location must be assessed against the standards and specifications in force for that location. They must not be used in hazardous locations unless it has been established that they do comply with the safety standards and specifications in force for that location.

4. Type N motors to BS 5000 : Part 16 have been designed to reduce the likelihood of sparking in normal operation and have surface temperature limitations. They may be acceptable in locations where an explosive gas-air mixture is not likely to occur in normal operation and if it occurs it will only exist for a short time. Before using any type N motor in such a location, ensure that safety standards and specifications in force for that location permit its use.

5. Chemical duty enclosed motors are designed for installation in locations where they may encounter corrosive substances and/or high moisture.

   Note: In all locations the surroundings must not obstruct the normal flow of ventilating air to and from the motor.

MOUNTING

1. Ensure the orientation of the frame is appropriate for the design of the motor. For instance, motors designed for B3 (horizontal shaft), may not be not be suitable without modification for V5 (vertical shaft) because any drain holes will be in the wrong position, additional fixings may be required to prevent the shaft sliding through the bearings and different bearings may be needed to withstand the thrust force.

   Drip proof motors may not be drip proof in the wrong orientation.

   Consult TECO to establish whether a motor may be safely used in an orientation different from that ordered.

2. Where the motor is to be subject to a high degree of vibration (such as on a vibrating screen), high humidity (typically above 95%), abnormal ambient temperature (typically outside the range -20 to +45oC), or high altitude (typically above 1000metre) ensure that the motor specification is appropriate.

3. When mounting the motor, ensure this is done securely using steel nuts and bolts through each of the fixing holes provided, fully tightened. Where the location is likely to cause rusting, such as in the presence of sea water, stainless steel fixing bolts may be an advantage. Where there is significant vibration, ensure there are shakeproof washers under the nuts.

4. Where the drain holes are to be left open, ensure they are guarded from access when the motor windings are connected to a power supply

5. With a directly-coupled load ensure the motor and load shafts are accurately aligned and use a flexible coupling between them. Mounting bolts must be carefully tightened to avoid alignment changes and the alignment rechecked to ensure it is correct when the bolts are fully tight.

6. With a side-coupled load, such as a belt or gear drive, ensure the side force on the shaft will not damage the motor. Consult TECO if in doubt.

POWER SUPPLY AND CONNECTIONS

1. Wiring of the motor and its controller, overload protection and earthing should be in accordance with the current edition of the IEE wiring regulations, EN60204 and all local safety requirements

2. Refer to the nameplate voltage and frequency to ensure the motor is correct for the power supply to which it is to be connected. Unless specified otherwise the motor may be assumed to be suitable for the nameplate voltage +/- 5% and nameplate frequency +/- 1%.

3. Connection diagrams for the motor are generally supplied with it, either on the nameplate, fixed to the motor or placed in the terminal box.

4. All TECO UL listed Explosion Proof motors have temperature limiting devices in the motor enclosure to help prevent excessive external surface temperature of the motor in accordance with UL standards. Terminals (P1, P2) of thermal protectors in these motors must be connected to the motor control equipment according to the connection diagram inside the terminal box. Note: these motors are not certified for use in hazardous areas in the European Union and must only be used in locations where the UL recognition is in force.

START UP

1. Initially, run the motor unloaded and establish that the rotation direction is as required. If not, **switch off and when rotation has stopped:**
   - if the motor is a three phase motor – interchange any two phases.
   - if the motor is a single phase motor – interchange the connections to the auxiliary winding circuit, leaving the connections to the main winding unchanged.

2. Then start the motor fully loaded. If it does not start quickly and run smoothly, switch off immediately and when rotation has stopped, isolate from the power supply and examine the assembly for mechanical faults or poor connections.

3. If there is excessive vibration it could be caused by poorly-aligned couplings, loose mounting bolts, lack of rigidity in the supports, transmitted vibration from adjacent machinery etc. Excessive vibration can lead to motor damage, for instance to the bearings making them noisy, and hence vibration should be minimised.

4. Ensure the current drawn is commensurate with that shown on the nameplate and that the currents in each phase are similar.

5. If a single phase motor does not start, this may be due to the internal starting switch not closing when the rotor is stationary or a faulty starting capacitor.

LONG TERM STORAGE AND HUMID ENVIRONMENTS

If the motor has been stored for an extensive period or subjected to adverse moisture conditions, ensure the insulation resistance is greater than 1MOhm before switching on. Also, regrease the bearings and if they are rusty, replace them.

When the insulation resistance is not greater than 1MOhm, dry out the motor as described below. If after drying out the insulation resistance is still not greater than 1MOhm, the motor will need repairing.

DRYING OUT

This may be carried out either:

1. By baking in an oven at up to 90oC. Ensure the interior and exterior of the oven are well ventilated.

2. By locking the rotor so it cannot move and connecting a low voltage to the motor windings. Gradually increase the voltage from zero until the current is about one third the rating plate value. Trim the voltage as necessary so that the winding temperature remains below 90oC.

   Drying out is complete when the insulation resistance stops changing.

MAINTENANCE

Inspection

Inspect the motor at regular intervals. Ensure it is kept clean with clear ventilation openings, there is no excessive vibration and noises emitted from the motor are normal. Ensure fixings and fasteners have not loosened nor so corroded that either their strength has been reduced significantly or earthing has been impaired. Ensure also that electrical connections are tight and uncorroded and that earthing is intact.

Inspect shaft seals and terminal box gaskets to ensure they are in position and not significantly worn. Contact TECO if the seal/gasket types on the motor are unknown. Examine the paint finish and repaint if necessary to avoid excessive corrosion. Ensure that shaft couplings are fixed firmly and that shaft alignment is correct. Ensure also that there is no build up of liquid inside the motor that would adversely affect its performance and drain if there is.

Lubrication

Motors with double shielded (suffix "ZZ" on bearing type) bearings are lubricated for life and cannot be relubricated.

Larger frames (usually Frames D200 and above, D180 2 pole and C180 and above) in particular have regreasing facilities. These motors are shipped already-greased and the grease should be replaced at regular intervals. The length of the interval varies with size of motor and how it is used. The table below gives a guide to relubrication intervals. Excessive or too frequent lubrication may actually damage the motor.

Rated kW output	Poles	Relubrication period		
		Standard conditions	Severe conditions	Extreme conditions
0-30	4 upwards	7 years	3 years	6 months
37-75	4 upwards	210 days	70 days	30 days
90-185	4 upwards	90 days	30 days	15 days
0-18.5	2	5 years	2 years	3 months
22-75	2	180 days	60 days	30 days
90-110	2	90 days	30 days	30 days
132-600	2	90 days	30 days	15 days

For other ratings please refer to TECO.

DEFINITIONS

Standard conditions: 8 hour operation per day with rated or light loading in a clean low-vibration environment.

Severe conditions: 24 hour operation per day with rated/light loading or in a dirty/dusty environment or where the motor is subject to vibration/light shock loading.

Extreme conditions: Where there is heavy shock loading or high vibration or a very dirty/dusty environment.

REGREASING OPERATION

If regreasing is to be carried out with the motor running, ensure it is done only by properly-trained personnel and that live and moving parts are fully guarded.

Ensure the grease exit is open and the grease nipple is clean

Attach a low pressure grease gun to the nipple and pump in grease until clean grease emerges at the grease exit.

Remove the grease gun. Fully guard live and moving parts and then run the motor for 10-30 minutes ensuring that any surplus grease is properly disposed of, and then refit any grease exit plug.

GREASE TYPE

Ensure only the correct type of grease is used. Greases incompatible with that in the bearings can greatly reduce the bearing life. Consult TECO if you are not sure of the type supplied in your TECO motor.

TECO standard regreasable motors use Esso Unirex Lithium N3 grease.

SPARES

Use only genuine TECO spares or alternatives recommended by TECO. When ordering, please give full nameplate details and in particular:

Frame Number	
Type	
Poles	
kW	
Serial Number	

Quantity required	

For further Information, please contact:
TECO ELECTRIC EUROPE LTD
TECO Building · Marshall Stevens Way · Westinghouse Rd
Trafford Park · Manchester · M17 1PP
Tel: +44 (0)161 877 8025
Fax: +44 (0)161 877 8030
Email: enquiries@teco.co.uk

www.teco.co.uk

TECO Westinghouse

TECO ELECTRIC EUROPE LIMITED

TECO ELECTRIC EUROPE LTD
TECO Building · Marshall Stevens Way · Westinghouse Rd
Trafford Park · Manchester · M17 1PP
Tel: +44 (0)161 877 8025
Fax: +44 (0)161 877 8030
Email: enquiries@teco.co.uk

www.teco.co.uk

EMD10579 Issue 2 FEB 2002

Project:

LAVRION V-CCPP
DMKT 11 21 302

Title: Preservation & Storage Manual

(MP BoilerFeed Water Pumps 5 LAC10/20 AP001)

Supplier Document No:	-	Issue: 0
KKS Document No:	5-LAC-GMP-FPD-531	
Purpose of issue: For Revision		Date: 20/12/04

00-Y-X-10302-F3/I Issue 1

Prepared: AF

Reviewed: JJ

Approved: MM

FLOWSERVE®

Pump Division

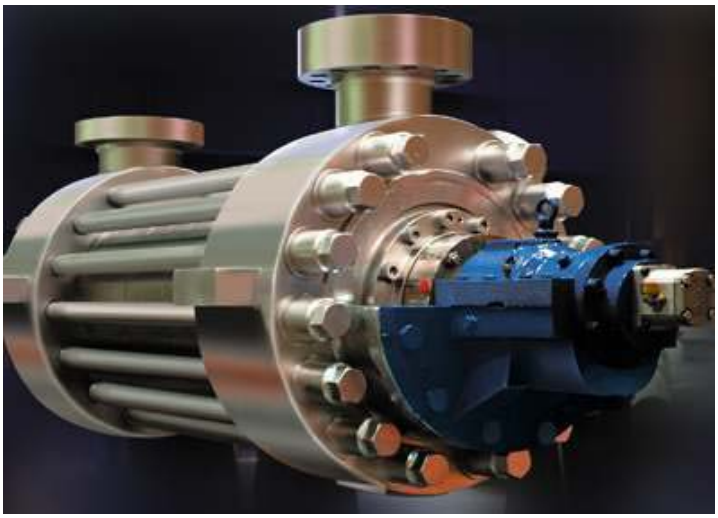

Type:	**(Medium pressure feedwater pumps)**
Size:	**3x11WXH-5**
Serial No:	**M-149.477/M-149.478**
Customer:	**EMPRESARIOS AGRUPADOS**
Project:	**LAVRION V**

USER INSTRUCTIONS: INSTALLATION, OPERATION, MAINTENANCE

User Instructions 10.06.50.10895 rev.0 (3/04) based on MasterWXH03 rev.0

Preeliminar

CONTENTS

During initial start-up of this equipment, it is essential that all of the instructions in this manual be adhered to strictly. It is recommended that the services of a Flowserve service supervisor be obtained to assure trouble-free operation. In some cases, start-up in the presence of a Flowserve service supervisor may be a contractual requirement for continuation of warranty. Check your contract.

To schedule a service supervisor, see back page of this manual.

1 INTRODUCTION AND SAFETY

1.1 General

These instructions must always be kept close to the product's operating location or directly with the product.

Flowserve's products are designed, developed and manufactured with state-of-the-art technologies in modern facilities. The unit is produced with great care and commitment to continuous quality control, utilising sophisticated quality techniques, and safety requirements.

We are committed to continuous quality improvement and being at your service for any further information about the product in its installation and operation or about its support products, repair and diagnostic services.

These instructions are intended to facilitate familiarization with the product and its permitted use. Operating the product in compliance with these instructions is important to help ensure reliability in service and avoid risks. The instructions may not take into account local regulations; ensure such regulations are observed by all, including those installing the product. Always coordinate repair activity with operations personnel, and follow all plant safety requirements and applicable safety and health laws and regulations.

These instructions should be read prior to installing, operating, using and maintaining the equipment in any region worldwide. The equipment must not be put into service until all the conditions relating to safety noted in the instructions, have been met.

1.2 CE marking and approvals

It is a legal requirement that machinery and equipment put into service within certain regions of the world shall conform with the applicable CE Marking Directives covering Machinery and, where applicable, Low Voltage Equipment, Electromagnetic Compatibility (EMC), Pressure Equipment Directive (PED) and Equipment for Potentially Explosive Atmospheres (ATEX).

Where applicable, the Directives and any additional Approvals, cover important safety aspects relating to machinery and equipment and the satisfactory provision of technical documents and safety instructions. Where applicable this document incorporates information relevant to these Directives. To establish approvals and if the product itself is CE marked, check the serial number plate and the Certification. (See Section 9, *Certification*).

1.3 Disclaimer

Information in these User Instructions is believed to be reliable. In spite of all the efforts of Flowserve Corporation to provide sound and all necessary information the content of this manual may appear insufficient and is not guaranteed by Flowserve as to its completeness or accuracy.

Flowserve manufactures products to exacting International Quality Management System Standards as certified and audited by external Quality Assurance organisations. Genuine parts and accessories have been designed, tested and incorporated into the products to help ensure their continued product quality and performance in use. As Flowserve cannot test parts and accessories sourced from other vendors the incorrect incorporation of such parts and accessories may adversely affect the performance and safety features of the products. The failure to properly select, install or use authorised Flowserve parts and accessories is considered to be misuse. Damage or failure caused by misuse is not covered by Flowserve's warranty. In addition, any modification of Flowserve products or removal of original components may impair the safety of these products in their use.

1.4 Copyright

1.5 Duty conditions

This product has been selected to meet the specifications of your purchaser order. The

acknowledgement of these conditions has been sent separately to the Purchaser. A copy should be kept with these instructions.

The product must not be operated beyond the parameters specified for the application. If there is any doubt as to the suitability of the product for the application intended, contact Flowserve for advice, quoting the serial number.

If the conditions of service on your purchase order are going to be changed (for example liquid pumped, temperature or duty) it is requested that you/the user seek our written agreement before start up.

1.6 Safety

1.6.1 Summary of safety markings

These user instructions contain specific safety markings where non-observance of an instruction would cause hazards. The specific safety markings are:

DANGER This symbol indicates electrical safety instructions where non-compliance would affect personal safety.

This symbol indicates safety instructions where non-compliance would affect personal safety.

This symbol indicates safety instructions where non-compliance would affect protection of a safe life environment.

CAUTION This symbol indicates safety instructions where non-compliance would affect the safe operation or protection of the pump or pump unit.

This symbol indicates explosive atmosphere zone marking according to ATEX. It is used in safety instructions where non-compliance in the hazardous area would cause the risk of an explosion.

Note: This sign is not a safety symbol but indicates an important instruction in the assembly process.

1.6.2 Personnel qualification and training

All personnel involved in the operation, installation, inspection and maintenance of the unit must be qualified to carry out the work involved. If the personnel in question do not already possess the necessary knowledge and skill, appropriate training and instruction must be provided. If required the operator may commission the manufacturer/supplier to provide applicable training.

Always coordinate repair activity with operations and health and safety personnel, and follow all plant safety requirements and applicable safety and health laws and regulations.

The instructions in this manual are intended for the guidance of personnel with a general training in operation and maintenance of centrifugal pumps. It is our hope that you will become acquainted with its content as an aid to better pump performance.

1.6.3 Safety action

This is a summary of conditions and actions to prevent injury to personnel and damage to the environment and to equipment. (For products used in potentially explosive atmospheres Section 1.6.4 also applies.)

This manual contains instructions for installation, operation, and maintenance and servicing of your Flowserve Centrifugal Pump. It has been designed to provide safe and reliable service. It is both a pressure vessel, and a rotating machine; therefore, the operators must exercise good judgment and proper safety practices to avoid damage to the equipment and surroundings, and prevent personal injury.

It is recommended that your Safety Department establish a safety program based upon a thorough analysis of industrial hazards. Before installing, operating, or performing maintenance on the pump and associated components described in this manual the safety program must be reviewed by maintenance and operating personnel prior to installing, operating or performing any maintenance on the pump and its components.

It is important that due consideration be given to those hazards which arise from the presence of electrical power, high-pressure, high-temperature liquids, hot oil, toxic liquids or gases, and/or flammable liquids or gases. Proper installation and care of protective guards, shutdown devices, and over-pressure protection equipment shall also be considered an essential part of any safety program.

DANGER Also essential are special precautionary measures to prevent the possibility of applying power to the equipment at any time when maintenance work is in progress. The prevention of rotation due to reverse flow must not be overlooked.

In general, all personnel should be guided by all of the basic rules of safety associated with the equipment and the process.

CAUTION PREVENT EXCESSIVE EXTERNAL PIPE LOAD
Do not use pump as a support for piping. Do not mount expansion joints, unless allowed by Flowserve in writing, so that their force, due to internal pressure, acts on the pump flange.

CAUTION ENSURE CORRECT LUBRICATION
(See Section 5, *Commissioning, startup, operation and shutdown*).

CAUTION START THE PUMP WITH DISCHARGE VALVE PART OPENED (Unless otherwise instructed at a specific point in the user instructions.)
This is recommended to minimize the risk of overloading and damaging the pump motor at full or zero flow. Pumps may be started with the valve further open only on installations where this situation cannot occur. The pump outlet control valve may need to be adjusted to comply with the duty following the run-up process. (See Section 5, *Commissioning, startup, operation and shutdown*).

CAUTION NEVER RUN THE PUMP DRY

CAUTION INLET VALVES TO BE FULLY OPEN WHEN PUMP IS RUNNING AND DURING START UP
Starting up or running the pump at zero flow or below the recommended minimum flow continuously will cause damage to the seal.

CAUTION DO NOT RUN THE PUMP AT ABNORMALLY HIGH OR LOW FLOW RATES
Operating at a flow rate higher than normal or at a flow rate with no back pressure on the pump may overload the motor and cause cavitation. Low flow rates may cause a reduction in pump/bearing life, overheating of the pump, instability and cavitation/ vibration.

CAUTION UNDER NO CIRCUMSTANCES IS THE PUMP TO BE OPERATED WITH ANY SAFETY DEVICES RENDERED INOPERATIVE

DANGER NEVER DO MAINTENANCE WORK WHEN THE UNIT IS CONNECTED TO POWER

HAZARDOUS LIQUIDS
When the pump is handling hazardous liquids care must be taken to avoid exposure to the liquid by appropriate siting of the pump, limiting personnel access and by operator training. Wear protective clothing in the presence of caustic, corrosive, volatile, flammable, or hot liquids. If the liquid is flammable and/or explosive, strict safety procedures must be applied. Do not allow sparking, flames, or hot surfaces in vicinity of the equipment. ***Gland packing must not be used when pumping hazardous liquids.***

DRAIN THE PUMP AND ISOLATE PIPEWORK BEFORE DISMANTLING THE PUMP
The appropriate safety precautions should be taken where the pumped liquids are hazardous.

FLUORO-ELASTOMERS (When fitted.)
When a pump has experienced temperatures over 250 ºC (482 ºF), partial decomposition of fluoro-elastomers (eg Viton) will occur. In this condition these are extremely dangerous and skin contact must be avoided.

HANDLING COMPONENTS
Many precision parts have sharp corners and the wearing of appropriate safety gloves and equipment is required when handling these components. To lift heavy pieces above 25 kg (55 lb.) use a crane appropriate for the mass. Consult current local regulations.

GUARDS MUST NOT BE REMOVED WHILE THE PUMP IS OPERATIONAL
The unit must not be operated unless the guard(s) is bolted in place. Failure to observe this could result in injury to operating personnel.

THERMAL SHOCK
Rapid changes in the temperature of the liquid within the pump can cause thermal shock, which can result in damage or breakage of components and should be avoided.

NEVER APPLY HEAT TO REMOVE IMPELLER
Trapped lubricant or vapour could cause an explosion.

HOT (and cold) PARTS
If hot or freezing components or auxiliary heating supplies can present a danger to operators and persons entering the immediate area action must be taken to avoid accidental contact. If complete protection is not possible, the machine access must be limited to maintenance staff only, with clear visual warnings and indicators to those entering the immediate area. Note: bearing housings must not be insulated and drive motors and bearings may be hot.

If the temperature is greater than 68 °C (175 °F) or below 5 °C (20 °F) in a restricted zone, or exceeds local regulations, action as above shall be taken.

1.6.4 Products used in potentially explosive atmospheres

This section only applies to products used in potentially explosive atmospheres.

Ex Measures are required to:

- Avoid excess temperature
- Prevent build up of explosive mixtures
- Prevent the generation of sparks
- Prevent leakages
- Maintain the pump to avoid hazard

The following instructions for pumps and pump units when installed in potentially explosive atmospheres must be followed to help ensure explosion protection. Both electrical and non-electrical equipment must meet the requirements of European Directive 94/9/EC.

1.6.4.1 Scope of compliance

Ex Use equipment only in the zone for which it is appropriate. Always check that the driver, variable speed coupling (if included), drive coupling assembly, seal and pump equipment are suitably rated and/or certified for the classification of the specific atmosphere in which they are to be installed.

Where Flowserve has supplied only the bare shaft pump, the Ex rating applies only to the pump. The party responsible for assembling the pump set shall select the coupling, driver and any additional equipment, with the necessary CE Certificate/ Declaration of Conformity establishing it is suitable for the area in which it is to be installed.

The output from a variable frequency drive (VFD) can cause additional heating affects in the motor and so, for pumps sets with a VFD, the ATEX Certification for the motor must state that it is covers the situation where electrical supply is from the VFD. This particular requirement still applies even if the VFD is in a safe area.

1.6.4.2 Marking

An example of ATEX equipment marking is shown below. The actual classification of the pump will be engraved on the nameplate.

Ex **II 2 GD c 135 ºC (T4)**

Equipment Group
I = Mining
II = Non-mining

Category
2 or M2 = High level protection
3 = normal level of protection

Gas and/or Dust
G = Gas; D= Dust

c = Constructional safety
(in accordance with prEn13463-5)

Maximum surface temperature (Temperature Class)
(See Section 1.6.4.3.)

1.6.4.3 Avoiding excessive surface temperatures

Ex ENSURE THE EQUIPMENT TEMPERATURE CLASS IS SUITABLE FOR THE HAZARD ZONE

Pumps have a temperature class as stated in the ATEX Ex rating on the nameplate.

The surface temperature on the pump is influenced by the temperature of the liquid handled. The maximum permissible liquid temperature depends on the temperature class and must not exceed the values in the table that follows.

Temperature class to prEN 13463-1	Maximum surface temperature permitted
T6	85 °C (185 °F)
T5	100 °C (212 °F)
T4	135 °C (275 °F)
T3	200 °C (392 °F)
T2	300 °C (572 °F)
T1	450 °C (842 °F)

The responsibility for compliance with the specified maximum liquid temperature is with the plant operator.

If an explosive atmosphere exists during the installation, do not attempt to check the direction of rotation by starting the pump unfilled. Even a short run time may give a high temperature resulting from contact between rotating and stationary components.

Where there is any risk of the pump being run against a closed valve generating high liquid and casing external surface temperatures it is recommended that users fit an external surface temperature protection device.

Avoid mechanical, hydraulic or electrical overload by using motor overload trips, temperature monitor or a power monitor and make routine vibration monitoring checks.

In dirty or dusty environments, regular checks must be made and dirt removed from areas around close clearances, bearing housings and motors.

1.6.4.4 Preventing the build up of explosive mixtures

Ex ENSURE THE PUMP IS PROPERLY FILLED AND VENTED AND DOES NOT RUN DRY

Ensure the pump and relevant suction and discharge pipeline system is totally filled with liquid at all times during the pump operation, so that an explosive atmosphere is prevented. In addition it is essential to make sure that seal chambers, auxiliary shaft seal systems and any heating and cooling systems are properly filled.

If the operation of the system cannot avoid this condition the fitting of an appropriate dry run protection device is recommended (eg liquid detection or a power monitor).

To avoid potential hazards from fugitive emissions of vapour or gas to atmosphere the surrounding area must be well ventilated.

1.6.4.5 Preventing sparks

Ex To prevent a potential hazard from mechanical contact, the coupling guard must be non-sparking and anti-static for Category 2.

To avoid the potential hazard from random induced current generating a spark, the earth contact on the baseplate must be used.

Avoid electrostatic charge: do not rub non-metallic surfaces with a dry cloth; ensure cloth is damp.

The coupling must be selected to comply with 94/9/EC and correct alignment must be maintained.

1.6.4.6 Preventing leakage

Ex The pump must only be used to handle liquids for which it has been approved to have the correct corrosion resistance.

Avoid entrapment of liquid in the pump and associated piping due to closing of suction and discharge valves, which could cause dangerous excessive pressures to occur if there is heat input to the liquid. This can occur if the pump is stationary or running.

Bursting of liquid containing parts due to freezing must be avoided by draining or protecting the pump and ancillary systems.

Where there is the potential hazard of a loss of a seal barrier fluid or external flush, the fluid must be monitored.

If leakage of liquid to atmosphere can result in a hazard, the installation of a liquid detection device is recommended.

1.6.4.7 Maintenance to avoid the hazard

Ex CORRECT MAINTENANCE IS REQUIRED TO AVOID POTENTIAL HAZARDS WHICH GIVE A RISK OF EXPLOSION

The responsibility for compliance with maintenance instructions is with the plant operator.

To avoid potential explosion hazards during maintenance, the tools, cleaning and painting materials used must not give rise to sparking or adversely affect the ambient conditions. Where there is a risk from such tools or materials, maintenance must be conducted in a safe area.

It is recommended that a maintenance plan and schedule is adopted. (See Section 6, *Maintenance.)*

1.7 Warning labels summary

1.8 Specific machine performance

When the contract requirement specifies performance parameters to be incorporated into User Instructions, these are included in Section 10.1. Where performance data has been supplied separately to the purchaser these should be obtained and retained with these User Instructions if required.

1.9 Noise level

When pump noise level exceeds 85 dB_A attention must be given to prevailing Health and Safety Legislation, to limit the exposure of plant operating personnel to the noise. The usual approach is to control exposure time to the noise or to enclose the machine to reduce emitted sound. You may have already specified a limiting noise level when the equipment was ordered, however if no noise requirements were defined then machines above a certain power level will exceed 85 dB_A. In such situations consideration must be given to the fitting of an acoustic enclosure to meet local regulations.

Pump noise level is dependent on a number of factors - the type of motor, the operating capacity, pipework design and acoustic characteristics of the building.

2 TRANSPORT AND STORAGE

2.1 Consignment receipt and unpacking

Immediately after receipt of the equipment it must be checked against the delivery/shipping documents for its completeness and that there has been no damage in transportation. Any shortage and/or damage must be reported immediately to Flowserve Pump Division and must be received in writing within one month of receipt of the equipment. Later claims cannot be accepted.

Check any crate, boxes or wrappings for any accessories or spare parts that may be packed separately with the equipment or attached to side walls of the box or equipment.

Each product has a unique serial number. Check that this number corresponds with that advised and always quote this number in correspondence as well as when ordering spare parts or further accessories.

Your pump was carefully checked at the factory prior to shipment to ensure compliance with the requirements of your order. It is suggested that the pump be inspected upon arrival for damages or signs of rough handling. If any damage is found and/or parts are missing, notify the carrier and nearest Flowserve office immediately. Failure to do so may affect the validity of the warranty.

The condition of the skid and covering is indicative as to the way the shipment was handled. Broken skids, torn coverings, bent hold-down bolts, broken straps, etc., indicate rough handling.

Inspect all covers over pump openings and piping connections. The protective covers on the pump nozzles should be in place and undamaged. If covers or seals for the covers are damaged or loose, they are to be removed, and a visual inspection made of the accessible interior areas for accumulation of foreign materials or water. Install or replace covers and fasten securely.

Inspect the preservative coating on the various parts. If necessary, renew the preservative in areas where it has been rubbed off or scraped to restore the parts to the "as shipped" condition.

Inspect all painted surfaces. If necessary, touch up the areas where paint has been chipped or scraped. Paints and preservatives used are either Flowserve standard or special as required by the contract specification.

The driver end cover, screens, and conduit box should be visually inspected for damage.

Shipping documents should be checked to determine satisfactory arrival of any special tools, loose parts, and/or spare parts (if provided), which are usually preserved and packed in a box attached to the skid.

2.2 Handling

Boxes, crates, pallets or cartons may be unloaded using fork-lift vehicles or slings dependent on their size and construction. Consult current local regulations.

2.3 Lifting

⚠ Careful attention must be paid to lifting the unit. Improper lifting can result in severe injury to personnel and/or damage to the equipment. Only qualified personnel trained in proper methods of lifting equipment should attempt to rig and lift this equipment.

CAUTION To lift pump and baseplate or just baseplate, sling baseplate from all lifting eyes provided. Failure to do this may result in permanent deformation of baseplate.

CAUTION Assure that coupling(s) are disconnected before lifting equipments.

⚠ The suction casing/discharge casing nozzles, and/or any auxiliary equipment or piping, should never be used to support the weight of the pump-driver unit, or any of its parts.

CAUTION Be sure that the lifting slings and/or chains are positioned to take equal strain so that twisting or sudden movement will not occur. Control lines around the pump or driver, are suggested to prevent the unit from swinging or flipping over

⚠ Make sure that any equipment used to lift the pump or any of its components is capable of supporting the total weight encountered (see General Arrangement drawing). A crane must be used for all pump sets in excess of 25 kg (55 lb.). Ensure that all parts are properly rigged before attempting to lift. Consult current local regulations.

⚠ Fully trained personnel must carry out lifting, in accordance with local regulations. The driver and pump weights are recorded on their respective nameplates or massplates.

2.4 Storage

CAUTION If it is necessary to store the pump any length of time before installation, find a location where it will be protected. The nozzle and piping

connection covers provided with the pump should be left in place during storage.

CAUTION The pump driver should not be stored in a damp atmosphere without special protection. Refer to driver instruction manual for storage instructions.

2.4.1 Rust preventive

The internal parts of pump are coated with a thin-film of polar-type rust preventive. This can be removed by flushing with petroleum solvents. External machined surfaces are protected with a durable, drying-type rust preventive. This can be removed with kerosene or other solvent.

External non-machined surfaces are painted. Parts ordered separately are protected with a thin-film of polar-type rust preventive. This can be removed with petroleum solvents.

2.4.2 Extended storage requirements for horizontal pumps

2.4.2.1 General

During extended periods of storage prior to installation and from the time of installation until commercial operation, precautions must be taken to protect the pump from deterioration. The various parts of the pump are protected prior to shipment by applying varying grades of preservative and paint. However, during shipment and handling, the preservatives are subjected to conditions that can cause their removal. Also, during extended periods of time, the preservatives may deteriorate. The following procedures should be followed to prevent deterioration of the pump during the extended storage period. These procedures may also be supplemented by the experience of the persons performing the tasks.

It should be noted, that unless otherwise agreed to, full responsibility and costs associated with the storage and inspection of this equipment rests with the customer.

CAUTION If pump is equipped with a mechanical seal and is stored or has not been run for 1 year or more, the mechanical seal must be removed before start-up and faces re-lapped to guard against the possibility of seal leakage. When reinstalling the seal, new circular joint rings and gaskets must be used.

CAUTION If pump is equipped with a mechanical seal, the seal should be coated with preservative, boxed and stored in a warm dry place.

CAUTION It is recommended that pump be stored completely assembled.

2.4.2.2 Storage area

When selecting a storage area, the following should be taken into consideration:

- deterioration of the equipment will be proportionate to the class/type of storage provided
- expenses involved in restoring the equipment at time of operation will be proportionate to the class/type of storage provided

CAUTION If at all possible, the pump and its component parts should be stored indoors where they will be protected from the elements. If it is not possible, precautions must be taken to protect them from the elements. Regardless of whether storage is inside or outside, the storage area should be vibration-free.

CAUTION All packages marked for inside storage must be stored indoors.

CAUTION The pump and its components when stored outdoors should be protected from dirt, dust, rain, snow or other unfavourable conditions by coverings of heavy gauge plastic sheets, canvas, waterproof burlap or other suitable coverings.

CAUTION All equipment must be placed upon skids or blocks to prevent contact with the ground and surface contaminants. Equipment must be adequately supported to prevent distortion and bending.

CAUTION Fill the bearing housings with the recommended oil to the bottom of the shaft. Flowserve does not recommend rotating the shaft on a periodic basis.

2.4.2.3 Storage preferred (dry)

2.4.2.3.1 Customer Inspection and Maintenance

The stored equipment is to be placed on a periodic schedule by the customer.

The responsibility for setting up an inspection and maintenance schedule rests with the customer and will be dependent upon the class/type of storage provided and the storage conditions. It would be expected that initially inspection would occur weekly, then, depending upon the inspection reports being favourable or unfavourable, inspection would continue weekly, monthly, or quarterly, as may be determined. Inspection reports must be kept on file.

Each inspection should consist of a general surface inspection:

a) Pump and pump rotor supports are firmly in place.

b) Pump covers over openings are firmly in place.

c) Pump covering, plastic or tarps, is firmly in place. Any holes or tears must be repaired to prevent entrance of dirt or water.

d) Pump covers are periodically removed from openings and interior accessible areas inspected. If moisture has accumulated or surface rusting occurred, dry out and clean or re-coat with preservative.

e) Loosen suction casing/discharge casing drain plugs or flanges to allow seepage of any accumulated moisture.

f) If rusting occurs on exterior surfaces, clean and repaint or re-coat with preservative.

g) Periodically remove bearing covers and inspect for accumulation of moisture, rust and foreign material. As required, clean bearings and bearing housings and re-preserve. Install bearing cover and secure it to assure maximum protection. Bearings removed for storage should be coated with preservative wrapped in oil/wax paper and stored in a warm dry area.

h) Check individually wrapped parts for signs of deterioration. If necessary, renew preservative and wrapping.

2.4.2.3.2 Six Months Prior To Installation
Six months prior to the scheduled installation date, a Flowserve representative is to be employed to conduct an inspection. All costs involved during inspection, dismantling, restoration, replacement of parts, and re-assembly will be the responsibility of the customer. All necessary labor, tools, and cranes will be supplied by the customer. This inspection will include (not necessarily in its entirety) but not be limited to, the following:

a) An inspection of all periodic inspection records as kept on file by the customer, and all inspection reports that have been compiled during the storage period.

b) An inspection of the storage area to determine the "as stored" condition of the equipment prior to any protection covers being removed.

c) An inspection of the equipment with protection covers and flange covers removed.

d) Depending upon the length of time the equipment was stored, the class/type of storage provided, (i.e.: indoor, heated, unheated, ground floor, concrete floor; outdoors, under roof, no roof, waterproof covering, on concrete, on ground) and as a result of the inspection of a, b and c above the Flowserve representative may require a partial or complete dismantling of the equipment.

e) Dismantling may necessitate restoration of painted or preserved surfaces, and/or replacement of gaskets, circular ring joints, packing and/or mechanical seal and bearings.

Upon completion of the inspection, the Flowserve representative shall submit a report to the customer, and to the Manager of Customer Service (Flowserve), stating in detail the results of the inspection.

2.4.2.3.3 One Month Prior To Installation
One month prior to installation of the equipment, a Flowserve representative is to be employed to conduct a final inspection. This final inspection will be made to assure that the requirements of the six month inspection report were satisfactorily completed and that the equipment is ready for installation.

Upon completion of this inspection, the Flowserve representative shall submit a final report to the customer, and to the Manager of Customer Service (Flowserve) advising the results of the final inspection.

2.4.2.4 Storage non-preferred (wet)
It is not recommended that the rotor be subjected to extended periods of submergence or wetting prior to start-up. However, it is recognized that in some cases, a long period of time may lapse from installation until commercial operation.

If the pump must be stored after being installed and wetted, the following inspection and maintenance procedures should be performed:

a) Isolate pump - tag (seal) all valves.

b) Preserve the pump internals:

- Corrosive Pumpage (such as water). Fill the pump as much as possible with a suitable corrosion inhibitor and, if required, seal off any openings. Flowserve recommends the use of Protecsol 649L which is a water soluble, vapour corrosion inhibitor. It is ideally suited for wet or dry corrosion protection of equipment during short term / long term lay-up periods of up to 24 months. Protecsol 649L corrosion inhibitor does not need to be removed prior to placing equipment back into service. For detailed instructions, inquires, and to purchase this product call: Ashland Specialty Chemical Company, Drew Industrial Division, Phone # 1-800-526-1015 and request Maintenance Chemical Marketing.
- Non-Corrosive Pumpage (such as oil). Fill pump with pumpage to the highest level possible. Periodically open drain connections to drain off

any moisture that may have accumulated. Refill to highest level possible. Drain and inspect pump prior to start-up.

2.4.3 Storage requirements for drivers

Generally storage must be indoors and dry. See the specific manufacturer's storage requirement.

2.4.4 Storage requirements for lube system

See the specific manufacturer's storage requirement.

2.4.5 Storage requirements for other equipments

See the specific manufacturer's storage requirement.

2.5 Recycling and end of product life

At the end of the service life of the product or its parts, the relevant materials and parts should be recycled or disposed of using an environmentally acceptable method and in accordance with local regulations. If the product contains substances that are harmful to the environment, these should be removed and disposed of in accordance with current local regulations. This also includes the liquids and/or gases that may be used in the "seal system" or other utilities.

Make sure that hazardous substances are disposed of safely and that the correct personal protective equipment is used. The safety specifications must be in accordance with the current local regulations at all times.

3 PUMP DESCRIPTION

3.1 Configurations

The WXH type pump is a multistage, high pressure ring section design pump with a balance disc type construction. It is available in a wide range of sizes and stages to accommodate a wide spectrum of needs.

WXH pumps are available in the following configurations:

- Single or double suction first stage impeller
- With or without intermediate stage take-off connection
- Different sizes
- Different bearings configurations

3.2 Name nomenclature

The pump size will be engraved on the nameplate typically as below:

3X11WXH-5

Nominal discharge flange diameter

Nominal impeller diameter

Commercial pump type

Number of stages

The typical nomenclature above is the general guide to the WXH configuration description. Identify the actual pump size and serial number from the pump nameplate. Check that this agrees with the applicable certification provided.

3.3 Design of major parts

Flowserve Pump design incorporates hydraulic and mechanical improvements resulting from years of experience in building this class of equipment.

These units are dependable, efficient and durable, and include outstanding features such as COMPLETE AXIAL and RADIAL BALANCE. Full protection is provided against corrosion, erosion and cutting. Throughout this manual, numbers (in parentheses) following part names--such as "shaft [2100]" indicate reference to the Sectional Assembly drawing and parts list included in the manual.

The pump is of the single flow type, i.e., all impellers face in one direction. Liquid enters through the suction opening at one end of the pump, passes through the impellers in succession and leaves through a discharge opening at the opposite end.

The first stage impeller is enclosed by the suction casing [1130]. The suction casing directs the flow of liquid from the suction nozzle to the first stage impeller.

Surrounding each succeeding impeller is a stage casing [1150.1/2/3] which contains the fluid passages. Diffusion vanes efficiently convert a portion of the velocity energy of the liquid leaving the impeller into pressure energy. This process is repeated through each successive stage, each adding its increment of head or pressure. Liquid leaving the last stage diffuser passes into an annular space in the discharge casing and out the discharge nozzle. Diffusers [1410.1/2] are used in preference to volutes because their hydraulic construction provides flexibility, efficiency and complete elimination of radial thrust at all conditions of operation.

3.3.1 Suction casing

The cast steel suction casing [1130] closes the suction end of the pump and houses the suction passage and flange. It also serves as the mounting for the radial bearing housing, includes machining for stuffing box sealing and is drilled for insertion of the rods. The pump mounting feet are also machined into the sides of the suction casing.

3.3.2 Casing

The casing consists of a series of stage casings [1150.1/2/3], and diffusers [1410.1/2], incorporating the hydraulic passages and impeller inlet chambers. The casing assembly is held in alignment by interlocking joints of close tolerances and held together between the suction and discharge casings with tie bolts and circular joint rings between each stage to seal the pump from leaking to atmosphere. This construction simplifies assembling and dismantling operations. Contact between the stage casings and diffuser is maintained by the clamping force of the tie bolts.
The stage casing diffuser design assures absolute concentricity with all diametral fits machined at one setting.

3.3.3 Shaft

The shaft [2100] furnished is machined from the highest quality material selected with consideration to the service for which the pump is to be applied. The shaft is of sufficient diameter to assure low torsional stresses and is accurately ground and polished throughout its entire length.

3.3.4 Sealing device

Cartridge style mechanical seals [4200] are used at both ends of the pump where the shaft protrudes through the suction casing [1130] and stuffing box housing [4110]. Each mechanical seal has a stationary ring against which a spring-loaded rotating ring seals, to prevent leakage from the pump.

3.3.5 Impellers and wear rings
Individually mounted impellers [2200.1/2/3], of one piece construction, are keyed to the shaft with keyways on alternate sides of the shaft. The 1st stage impeller is positioned against a shoulder on the shaft with the remaining impellers stacked hub to hub. During operation, force is transmitted through the impeller hub into the shaft at the shaft shoulder. Renewable casing wear rings [1500.1/2] are provided to control leakage past the impeller hubs or the renewable impeller wear rings (if supplied).

3.3.6 Discharge casing
A cast steel discharge casing [1140] closes the discharge end of the casing and serves as a mounting surface for the outboard stuffing box housing and thrust bearing housing, and includes drilling for insertion of the tie bolts. The outboard feet are also machined into the sides of the discharge casing.

3.3.7 Balancing device
Flowserve ring section pumps are maintained in complete axial balance during operation by a self compensating flanged balance disc [6210], and counter balance disc [6220]. The normal axial thrust developed by the rotor toward the suction end of the pump is effectively counteracted by the balancing device assembly located at the discharge end. The front end of the balance disc is exposed to full discharge pressure. The chamber at the back of the balance disc is piped to suction pressure, placing this pressure on the outer face. A thrust is therefore developed which is equal in magnitude and opposite in direction to the normal thrust of the pump impellers toward the suction.

3.3.8 Bearings
The plain and thrust ball bearings are lubricated by means of oil rings, which run on journal sleeves and in the oil reservoir of the bearing housings.

The plain ball bearing is a single-row deep-groove type, free to adjust axially in the bearing housing.

The thrust ball bearing is of the double-row (mounted back-to-back) angular-contact type, and is capable of transmitting the thrust load in either direction. The thrust is transmitted through the shaft to the ball bearings and thence to the bearing body and foundation. The pump bearings are renewable.

3.3.10 Pump pedestals
The pump should not be removed from the pedestal unless it is going to be disassembled. The pump pedestal help to keep the suction and discharge nozzles aligned while torquing the tie bolts.

3.4 Performance and operating limits
This product has been selected to meet the specifications of your purchase order see Section 1.5.

4 INSTALLATION

Note: It is strongly recommended the installation and commissioning of this equipment be conducted in accordance with API Recommended Practices 686/PIP REIE 686 First Edition. Refer to API 610 Eighth Edition Appendix 'L' for baseplate grouting requirements.

Copies of API Recommended Practices 686/PIP REIE 686 First Edition may be obtained from America Petroleum Institute, 1220 L Street, N. W., Washington, D. C. 20005. Phone #: (202) 682 8000.

The following ASTM Specifications are furnished as references for test methods used in conjunction with installation of grouting materials and should be used to obtain proper results.

- ASTM C 78-84: Test Method for Flexural Strength for Concrete
- ASTM C 109-90: Test Method for Compressive Strength of Hydraulic Cement Mortars (Modified)
- ASTM C 469 87a: Test Method for Static Modulus of Elasticity and Poisson's Ratio of Concrete in compression
- ASTM C 496-90: Test Method for Splitting Tensile Strength of Cylindrical Concrete Specimens
- ASTM C 531-85: Test Method for Linear Shrinkage and Coefficient of Thermal Expansion of Chemical Resistant Grouts and Monolithic Surfacings (Modified)
- ASTM C 666-90: Test Method for Resistance of Concrete to Rapid Freezing and Thawing
- ASTM C 939-87: Test Method for Flow of Grout for Preplaced Aggregate Concrete (Flow Cone Method)
- ASTM C 942-86: Test Method for Compressive Strength of Grouts for Preplaced Aggregate Concrete in the Laboratory
- ASTM C 1090-88: Test Method for Measuring Changes in Height of Cylindrical Specimens from Hydrau-lic Cement Grout
- ASTM C 1107-91: Standard Specification for Packaged Hydraulic Cement Grout (Non shrink)
- (CRD C 621-92) ACI 351 24 Hour Test: Grouting for Support of Equipment and Machinery. MBT Test Method for Grout Performance

Minimum requirements for epoxy grout (typical properties at 23 °C (73 °F)

- ASTM D-635: Fire Resistant
- ASTM C-579B: Minimum Compressive Strength 82.7 N/mm^2 (12000 psi)
- ASTM C-827: Height Change @ 38 °C (90 °F). Positive Effective Bearing Area 95%
- ASTM C-1181: Maximum Creep in 1 Year 1.6X10^{-3} mm/mm (in./in.) at 60 ºC (140 °F), 2.76 N/mm^2 (400 psi)
- ASTM C-307. Minimum Tensile Strength 12.4 N/mm^2 (1800 psi)
- ASTM C-580. Minimum Flexural Strength 26.2 N/mm^2 (3800 psi)
- ASTM C-580. Minimum Flexural Secant Modulus 1.2X10^4 N/mm^2 (1.8X10^6 psi)
- ASTM C-531. Maximum Coefficient of Expansion 17X10^6 mm/mm/ºC (in/in/°F). Maximum Peak Exotherm 1000 gm insulated 35 °C (95 °F). Full Aggregate Must Be Used

Damage resulting from neglect and disregard of the instructions and precautions included in this instruction manual will be the sole responsibility of the purchaser.

CAUTION Poor location and use of inadequate standards for the preparation of the foundation adversely affect pump life. A good foundation is particularly important since it can be a primary factor in preventing vibration, a major cause of wear and failure of the pump.

Ex Equipment operated in hazardous locations must comply with the relevant explosion protection regulations. See Section 1.6.4, *Products used in potentially explosive atmospheres*.

4.1 Location

When selecting pump location, allow adequate space for access, ventilation, operation, maintenance and inspection of the unit. Head room must be an important consideration for maintenance of the unit; lifts will have to be made in order to remove the pump with pump pedestal. An overhead rail or crane, in line with the pump centreline is most desirable. Important data and dimensions can be obtained from the General Arrangement drawing included in this User Instructions book.

4.2 Prior to installation / operation

Please read all notes on General Arrangement drawing.

4.3 Foundation

Note: The following information regarding foundation is only offered as a general guideline to the customer. Flowserve Corp. requires that all foundations be designed/installed in accordance with specifications set forth in Chapter 4 'Foundations' from API Recommended Practices 686/PIP REIE 686, First Edition.

CAUTION The design of foundations is not the responsibility of Flowserve Corp. It is therefore recommended that the customer consult a competent specialist skilled in the field of foundations, to insure proper design and installation of the foundation.

CAUTION There are many methods of installing pump units to their foundations. The correct method depends on the size of the pump unit, its location and noise vibration limitations. Non-compliance with the provision of correct foundation and installation may lead to failure of the pump and, as such, would be outside the terms of the warranty. Ensure the following are met.

The foundation should be sufficiently rigid and substantial, to prevent any pump vibration and to permanently support the equipment at all points.

The most satisfactory foundations are made of reinforced concrete. These should be poured well in advance of the installation to allow proper time for drying and curing.

The foundation mass ratio should be three to five times the weight of the equipment.

The General Arrangement drawing will furnish anchor bolt locations, size of bolts, etc.

The sketch illustrates a recommended foundation bolt arrangement. Notice the large washer with lugs at the bottom. It should be welded to the bolt and pipe sleeve to prevent turning.

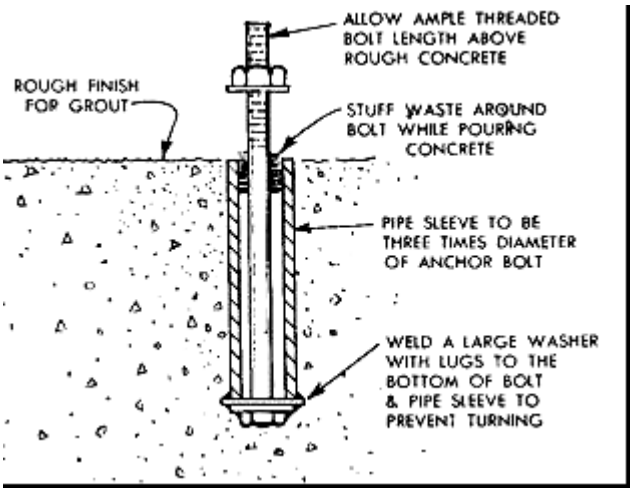

A rough-finish top surface is best when applying grout. It must be clean and dry before pouring any grout.

Note: Recommended ambient temperature should be above 18 ºC (65 °F) during grouting.

4.4 Arrangement of foundation bolt in foundation

Foundation bolts should be located using dimensions as shown on General Arrangement drawing.

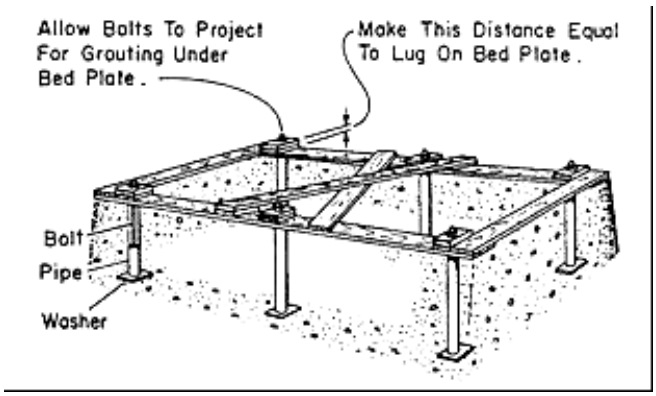

The sketch illustrates a template for hanging foundation bolts.

4.5 Bedplate installation

4.5.1 General considerations

The foundation must be sufficiently rigid and must support the unit at all points. Foundation must be designed such that structural resonance is outside of the operating speed range of the pump and motor.

Before putting the unit on the foundation, thoroughly clean the top of the foundation. Break off any loose pieces of cement and roughen the top with a chisel to afford a good hold for grout. Use epoxy type grout.

Refer to General Arrangement drawing for additional bedplate information.

4.5.2 Levelling the bedplate

Note: The following information regarding levelling of equipment is only offered as a general guideline to the customer. Flowserve Corp. requires that all levelling of equipment be performed in accordance with specifications set forth in Chapter 5 'Mounting Plate Grouting' from API Recommended Practices 686/PIP REIE 686, First Edition.

Make sure that any equipment used to lift the motor or any other components is capable of supporting the total weight encountered. Make sure that all parts are properly rigged before attempting to lift.

CAUTION Place the unit in position on foundation. When lifting baseplate, sling from all lifting eyes provided. Failure to do this may result in permanent deformation of baseplate.

CAUTION Motor must be removed before lifting baseplate.

Establish the equipment elevations as shown on the General Arrangement drawing. The equipment train must be levelled prior to grouting to verify final alignment can be achieved.

For shims and/or fasteners refer to General Arrangement drawing & Notes.

The following tool(s) will be required for use in this procedure:

- A precision (machinist) level, graduated in 0.05 mm/m (or 0.0005 in./ft.) increments.

Note: Do not grout baseplate prior to levelling the bedplate.

CAUTION Baseplate must not be lifted with motor mounted.

CAUTION When lifting, sling bedplate from all lifting eyes provided. Failure to do this may result in permanent deformation of baseplate.

Begin levelling at high end of baseplate. Level crosswise on this end till pads are within 0.16 mm/m (0.002 in./ft.). Adjust the baseplate to achieve this degree of level by using built in levelling screws.

Proceed to the rest of the pads repeating the procedure above until the baseplate is level in the crosswise direction. If possible, span the pads with a flat bar and check level across pads.

Level both sides of the baseplate in the lengthwise direction to 0.16 mm/m (0.002 in./ft.) to a maximum of 0.25 mm (0.010 in.) over the entire length of the baseplate.

Tighten the anchor bolts and check the level in both crosswise and lengthwise direction. If tightening disturbs the level, adjust levelling screws till levelness is achieved when anchor bolts are tight.

If the pads cannot be levelled within this designated tolerance, please contact your Flowserve representative for appropriate corrective action.

Mount all equipment, if necessary, and proceed to alignment.

4.6 Equipment mounting

4.6.1 General considerations

Pump is mounted on bedplate at the factory and shipped to the site on bedplate.

Note: Refer to General Arrangement drawing for additional information on bolting pump to bedplate and bedplate installation.

The driver may already be mounted on the baseplate depending upon the contractual requirements. Refer to the driver (and variable speed coupling, if supplied) IOM and General Arrangement drawing for additional information.

4.6.2 Soft foot check

The pump feet shall be checked for soft feet. The hold down bolts should be torqued to the values listed in the torque tables. Then one foot shall be loosened with an indicator contacting the top of the foot. The maximum allowable foot movement shall be 0.25 mm (0.010 in.). Re-tighten this foot and proceed to the next. If any foot has more than the maximum allowable soft foot movement, please contact your Flowserve representative for appropriate corrective action.

4.7 Vertical thermal rise of equipment

CAUTION The pump and motor (and variable speed coupling, if included) will normally have to be aligned at ambient temperature and should be corrected to allow for thermal expansion at operating temperature.

A hot check can only be made after the unit has been in operation a sufficient length of time to assume its NORMAL operating temperature and conditions. If the unit has been properly cold set, the coupling hub misalignment will be within 0.050 mm total indicator run-out (0.002 in. TIR) and coupling hub faces are parallel within 0.025 mm (0.001 in.) when in operation. If not, make adjustments.

Note: Refer to "RIM AND FACE DATA SHEET".

Note: It is recommended, the completed "RIM AND FACE DATA SHEET" be retained as part of your permanent maintenance file.

Do not attempt any maintenance, inspection, repair or cleaning in the vicinity of rotating equipment. Such action could result in injury to operating personnel.

Before attempting any inspection or repair on the pump, the driver controls must be in the “off” position, locked and tagged to prevent restarting equipment and injury to personnel performing service on the pump.

4.8 Initial shaft/coupling alignment

4.8.1 General considerations

Note: The following information regarding shaft alignment is only offered as a general guideline to the customer. Flowserve Corp. requires that all shaft alignment be performed in accordance with specifications set forth in Chapter 7 'Shaft Alignment' from API Recommended Practices 686/PIP REIE 686, First Edition.

CAUTION Shaft alignment must be correct for successful operation. Rapid wear, noise, vibration and actual damage to the equipment may be caused by shaft misalignment. The shafts must be aligned within the limits given within this section.

Note: Adjustment to correct the alignment in one direction may alter the alignment in another direction. Always check in all directions after making any adjustment.

Note: If variable speed coupling is included, it is necessary to align the pump and variable speed coupling shafts, and the variable speed coupling and motor shafts.

Coupled equipment must be aligned to minimize unnecessary stresses in shafts, bearings and coupling. Flexible couplings will not compensate for appreciable misalignment. Foundation settling, thermal expansion or nozzle loads resulting in foundation deflection and vibration during operation may require the full coupling misalignment capability.

4.8.2 Types of misalignment

There are two types of shaft misalignment: Angular and Offset. Therefore, two sets of measurements and corrections are required. Both types of misalignment can occur in horizontal and vertical planes and are present in most applications.

4.8.2.1 Angular misalignment

In angular misalignment, the centrelines of the shafts intersect, but are not on the same axis.

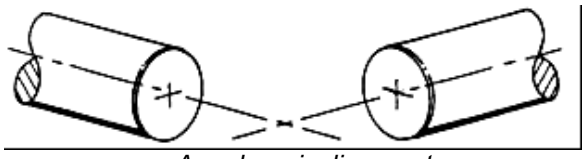

Angular misalignment

4.8.2.2 Offset misalignment

In offset misalignment, the shaft centrelines are parallel but do not intersect.

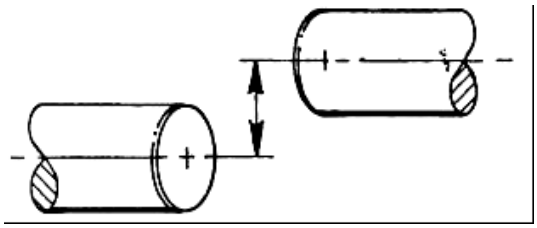

Offset misalignment

4.8.2.3 Combination of angular and offset misalignment

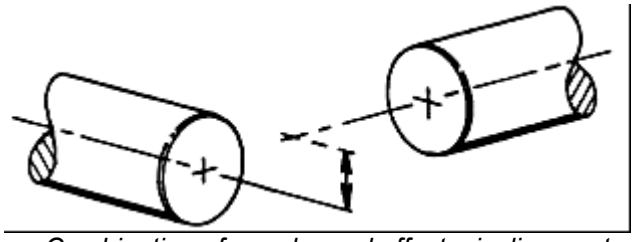

Combination of angular and offset misalignment

4.8.3 Alignment

For shim & alignment procedures, refer to General Arrangement drawing notes.

DANGER Ensure pump and driver are isolated electrically and the half couplings are disconnected.

CAUTION The alignment MUST be checked.

4.8.3.1 Measure gap

The first step in shaft/coupling alignment is to bring the pump and driver shafts into their proper axial position. The shaft gap, or distance between coupling hubs, must be in accordance with the certified General Arrangement drawing and must be measured with pump and driver shafts in the centre of their axial end float. Motor with sleeve bearings is to be aligned with rotor at magnetic centre.

Note: Refer to driver instructions.

CAUTION If the driver does not run in its magnetic centre the resultant additional axial force may overload the pump thrust bearing.

Move driver to insure proper gap distance.

4.8.3.2 Before alignment

Note: It is recommended that the pump hold down bolting be torqued and the pump be fixed before taking any alignment measurements. This makes the driver the movable machine. In certain cases, however, it may be impractical to move the driver; therefore, the pump may have to be moved. When this case exists, the pump should not be fixed until after final alignment. (See Section 4.11, *Doweling pump and driver*).

CAUTION If pump shaft must be rotated bearings are to be pre-lubed before aligning starts. Refer to Section 5.2.1, *Lubrication*.

Align pump and driver using the rim and face method, rotating driver only. Align equipment such that coupling hub rims are aligned within 0.050 mm TIR (0.002 in. TIR), and coupling hub faces are parallel within 0.025 mm (0.001 in.).

Note: Refer to "RIM AND FACE DATA SHEET".

Laser alignment, double reverse (dial) alignment, or reverse rim (dial) alignment methods can be used to check alignment when site requirements dictate.

4.8.3.3 Horizontal move

The dial indicators shown below are required to accurately measure the move in the horizontal direction. Move the driver by bumping with soft hammer/mallet or using the alignment screws (if provided).

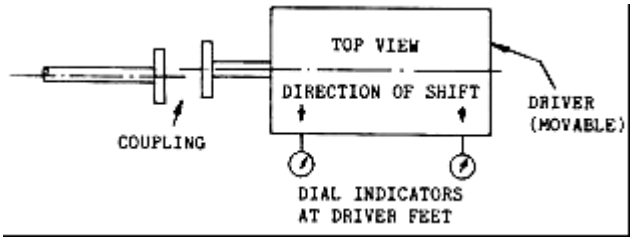

4.8.3.4 Vertical move

Before moving the equipment vertically, it is important that the vertical thermal expansion be taken into consideration. Refer to General Arrangement Notes and/or Driver Instructions for recommended cold vertical setting.

The stainless steel shims between the equipment feet and mounting surface should be clean and dry. This is especially critical for pumps that have been in service for some time and need to be realigned. Water, dirt and rust may change the height of the shim pack over a period of time. Shims should be made large enough to support the weight of the equipment on its mounting foot. Do not use many thin shims, as this may result in a spongy mounting.

Move the equipment vertically by adding or removing the calculated thickness of shims. Torque equipment hold-down bolting to required values.

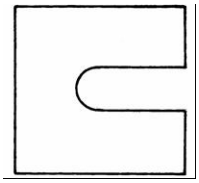

Recommended shim design

4.9 Checking coupling alignment

The angular and offset coupling alignment must now be rechecked:

- Coupling faces are to be parallel within 0.025 mm (0.001 in.)
- Coupling outside diameters are to be aligned within 0.050 mm TIR (0.002 in. TIR)

Use a dial indicator as shown below to check both parallel and angular alignment.

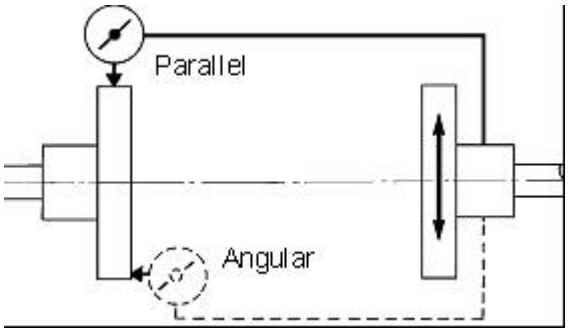

"Bump" the motor and check motor rotation.

4.10 Assembling coupling

Assemble the coupling(s) per the manufacturer's instructions.

Install coupling guard(s).

4.11 Doweling pump and driver

Note: For doweling information, refer to General Arrangement drawing notes.

Pumps handling liquids at temperatures greater than 90ºC (200°F) are designed to permit expansion away from the drive or coupling end. The pumps that are under this classification must have the pump supports or feet doweled to the baseplate at the coupling end. This mantains the coupling gap at the desired amount.

The pump feet at the opposite end are held from moving vertically by the use of a self locking nut. The clearance between the base of the nut and the top of the pump foot should be 0.051 mm (0.002 in.)

The horizontal movement is controlled by a gib block running parallel to the length of the pump at each of the outboard feet. The gib blocks are bolted and dowelled to the baseplate at the time of mounting at the factory. A 0.25 mm (0.010 in.) gap is mantained between the gib block and pump foot.

This arrangement controls the direction of the casing expansion to ensure that alignment between the pump and the driver shaft is maintained.

Note: The self locking nuts which hold the pump from moving in a vertical motion are clamped tight to the pump foot at time of shipment. The 0.25 mm (0.010 in.) clearance must be established at time of installation.

Note: Refer to the IO&M manual of the motor (and variable speed coupling, if included) for information about doweling.

RIM AND FACE DATA SHEET

Project Number_____

Plant: _____
Movable: Item: _____
Type: _____
Fixed: Item: _____
Type: _____

Unit: _____
Manufacturer: _____
Serial No.: _____
Manufacturer: _____
Serial No.: _____

Indicator bar sag: _____ Indicator bar number: _____

RIM READINGS

Set proper face readings before taking rim readings

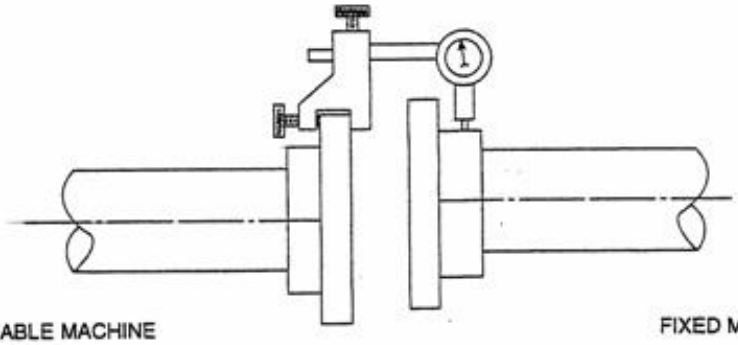

MOVABLE MACHINE FIXED MACHINE

Swept diameter × _____

D = Axial distance between shaft hubs × _____

INDICATOR READINGS: "Left" and "Right" indicator readings are determined by looking from the back of the movable machine toward the fixed machine.

THEORETICAL and Tolerance	ACTUAL (PIPE OFF) Corrected for Axial Float	ACTUAL (PIPE ON) Corrected for Axial Float
Top ____	Top ____	Top ____
Left ____ Right ____	Left ____ Right ____	Left ____ Right ____
Bottom ____	Bottom ____	Bottom ____

PREPARED BY _____ DATE _____

RIM AND FACE DATA SHEET (CONTINUED)

Project Number_____

Movable: Item: _____
Type: _____
Fixed: Item: _____
Type: _____

Indicator bar sag: _____ Indicator bar number: _____

FACE READINGS

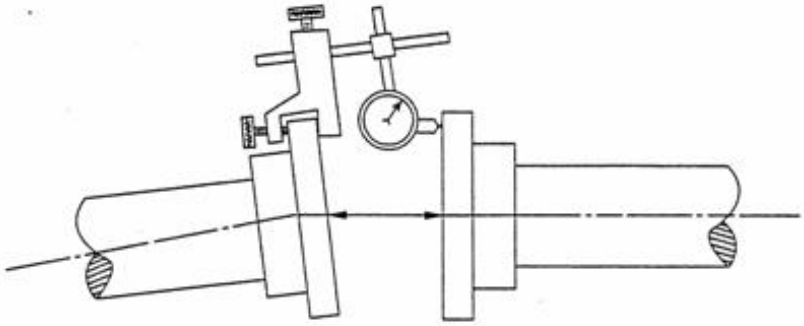

MOVABLE MACHINE FIXED MACHINE

INDICATOR READINGS: "Left" and "Right" indicator readings are determined by looking from the back of the movable machine toward the fixed machine.

THEORETICAL and Tolerance	ACTUAL (PIPE OFF) Corrected for Bar Sag	ACTUAL (PIPE ON) Corrected for Bar Sag
Top ____	Top ____	Top ____
Left ____ Right ____	Left ____ Right ____	Left ____ Right ____
Bottom ____	Bottom ____	Bottom ____

Shims Tabulation

Fixed IB Left	_____	Move. IB Left	_____
Fixed IB Right	_____	Move. IB Right	_____
Fixed OB Left	_____	Move. OB Left	_____
Fixed OB Right	_____	Move. OB Right	_____

Note: All shims are recorded looking to the fixed machine from the movable machine.

WITNESSED BY _____ DATE _____

4.12 Grouting

Note: The following information regarding grouting is only offered as a general guideline to the customer. Flowserve Corp. requires that all grouting be installed in accordance with specifications set forth in Chapter 5 'Mounting Plate Grouting' from API Recommended Practices 686/PIP REIE 686, First Edition.

It is recommended that the customer consults a competent specialist skilled in the field of grouting, to insure proper installation of all grouting.

Build a dam around the foundation before pouring grout. It is a matter of personal preference whether the levelling wedges under the bedplate should be removed after grouting. If you do want to remove the wedges, carefully mark their locations before pouring grout.

Use of a quality, high strength, non-shrink epoxy grout is recommended.

Alternatively, a layered sandwich of epoxy grout and cemetitious grout can be used. The first layer is an epoxy grout that ends 25 mm (1 in.) below bottom of the lower baseplate flanges. The second level is a cementitious non-shrink grout poured to approximately 50 mm (2 in.) below the top of the baseplate flanges or topplate. The last layer is another epoxy grout to the top of the baseplate flanges or topplate.

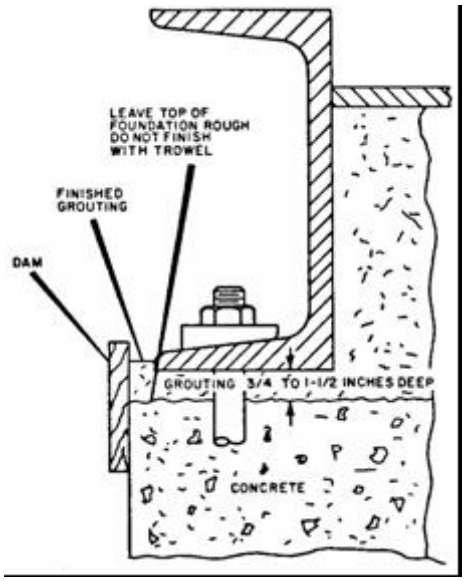

Spaces are provided in the bedplate to permit pouring the grout and stirring. Fill under the bedplate completely, stirring to assure proper distribution of the grout. Check to see that the grout flows under the edges of all the ribs.

Note: Do not vibrate bedplate when grouting; make sure all areas indicated on General Arrangement drawing are thoroughly puddled to prevent any resonant problems.

When the grout is thoroughly hardened, remove the dam and wedges, if desired, filling in the holes they leave with grout.

4.13 Suction strainer

CAUTION In a new installation, great care should be taken to prevent dirt, scale and welding beads from entering the pump. Even when piping has been previously flushed, it is difficult to break loose the oxides and mill scale which will become free when the pipe heats and cools several times. Numerous close running clearances are vulnerable to abrasive matter present in new piping. Foreign material may be large enough, or of sufficient volume, to jam a pump, with probable damage to both pump and drive equipment. Smaller material passing through the pump can cause rapid pump wear and premature pump failure.

The pump is provided with the expectation that it will be pumping clean liquids (unless otherwise stated in the order and addressed in the proposal). If a suction strainer is provided it is not intended to be used for cleaning the entire boiler piping system.

Flowserve ring section pumps are normally provided with running clearances ranging typically from 0.30 mm (0.012 in.) to 0.41 mm (0.016 in.). Particles of this size will normally pass through the pump without causing damage, providing the concentrations are minor.

The possibility exists that, on shutdown of the pump, such particles can become trapped in the close running clearances during coastdown, causing binding. Flowserve cannot recommend a procedure that will totally prevent such binding; however, we strongly suggest that systems be cleaned and thoroughly flushed prior to connecting the pump to the piping to minimize particles entering the pump. Starting and stopping of the pump should be MINIMIZED as pumps are most susceptible to dirt during starts and stops.

In the event that binding on coastdown occurs, it is unlikely that the binding can be remedied by hand rolling the rotor, and partial disassembly may be required to clean the affected parts. It should be noted that increased particle concentrations increase the probability of coastdown binding and seizures, as well as erosion damage.

CAUTION Excessive force used to try to free a bound rotor may cause damage beyond minor cleanup and repair of rotor parts.

Generally, a pump should not be installed without strainer protection. The suction system should be thoroughly flushed before installing the suction strainer and making up the suction piping to the pump. The strainer should be installed in the inlet piping of the pump, making certain that it is located where it may be readily serviced (clean). Be sure, however, that the installed strainer will not distort the flow to the pump suction.

CAUTION Do not install the strainer directly on the pump suction nozzle. Strainers should be located at least 6 or 10 pipe diameters upstream of the suction nozzle.

The Flowserve standard for suction strainers consists of conical shaped steel plate with 1.6 mm (1/16 in.) perforations. The open area of the strainer should be a minimum of three times the area of the pump suction.

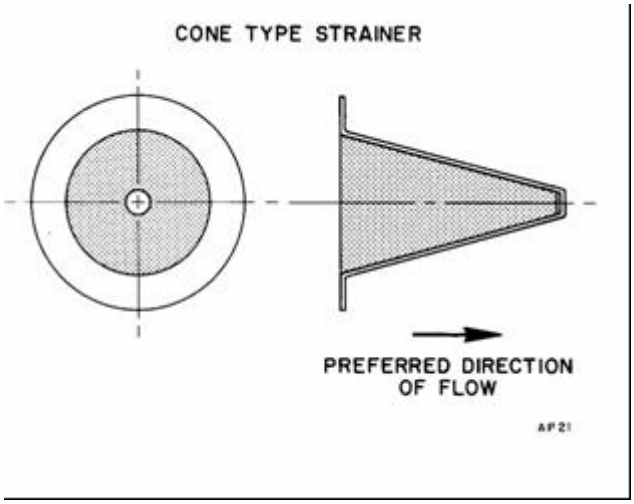

At all times when using suction strainers, it is critical that the pressure drop across the strainer be constantly monitored to ensure that the pump suction pressure does not fall below that required to prevent pump cavitation. Pressure (or vacuum) gauges should be installed on both sides of the strainer so that the pressure drop across the strainer can be monitored. During start-up of the system, the gauges should be monitored continuously. Consult the plant engineer or system designer for the allowable pressure differential across the strainer prior to operating the pump. Pressure differential across the strainer and/or screen is typically no more than 0.2 bar (3 psi). An increase in the differential pressure between the two gauges indicates that the strainer or screen is becoming clogged with dirt and scale. Before the pressure drop becomes so severe that cavitation occurs, the pump should be shut down and the strainer cleaned. Alarm settings to protect the pump from damaging cavitation and loss of suction need to be supplied by the plant engineer or system designer prior to operating the pump. Typically alarm settings to protect the pump from damaging cavitation and loss of suction would be 0.35 bar (5 psi) differential pressure across the strainer (screen). The suction piping should be arranged such that the ultimate strainer configuration (location) allows ready access for cleaning.

The strainer may be fitted with a finer screen to filter the inlet flow. When this is done, 100 mesh screen is typically used for start up operation, at reduced flow rates. For final operation in a closed system, the suction strainers are normally removed after the system is cleaned. For critical pump applications, where continuous screening of suction flow is desirable, and in open systems, 20 mesh screening is typically used for permanent strainers. At all times, when using screens and suction strainers, it is critical that pressure drop across the screen and/or strainer be constantly monitored to ensure that the pump suction pressure does not fall below that required to prevent cavitation.

When dirt and scale have been removed from the system, as indicated by no further change in pressure drop across the strainer with time, the start up strainer may be removed or the screen may be replaced with one having larger openings. If a permanent strainer will be used during normal operation, the pressure differential needs to be monitored on a continuous basis.

CAUTION If a permanent strainer is not used, the start up strainer needs to be temporarily reinstalled whenever the system is opened up for repair or routine maintenance. As long as a suction strainer or screen remains in place, the differential pressure should be monitored on a regular basis.

CAUTION The pressure drop across the strainer is a direct reduction in the NPSH available to the pump. NPSH available must always exceed the NPSH required by the pump. This requirement may limit the pump flow rate, particularly during start-up operation. Alarms or automatic pump shut-down devices should be installed to minimize the possibility of pump damage. It is the responsibility of the pump operator to obtain the allowable pressure drop across the strainer for safe pump operation from the plant engineer or system designer prior to operation of the pump.

4.14 Piping

Note: The following information regarding piping is only offered as a general guideline to the customer. Flowserve Corp. requires that all piping and related

systems be designed/installed in accordance with specifications set forth in Chapter 6 'Piping' from API Recommended Practices 686/PIP REIE 686, First Edition.

Note: Don't install piping until preliminary alignment, grouting and final field weldings have been completed.

Note: The design of piping, and related systems, is not the responsibility of Flowserve Corp. It is therefore recommended that the customer consults a competent specialist skilled in the field of piping, to insure proper design/installation of all piping.

CAUTION Protective covers are fitted to the pipe connections to prevent foreign bodies entering during transportation and installation. Ensure that these covers are removed from the pump before connecting any pipes.

CAUTION Never use the pump as a support for piping.

CAUTION Ensure piping and fittings are flushed before use.

Ensure piping for hazardous liquids is arranged to allow pump flushing before removal of the pump.

4.14.1 Suction and discharge piping

These units are furnished for a particular service condition. Changes in the hydraulic system may affect performance adversely. This is especially true if the changes reduce the pressure at the suction flange. In case of doubt, contact the nearest Flowserve Office.

Suction and discharge piping should be of ample size, be installed in direct runs, and have a minimum of bends.

Install a check valve and a gate valve in the discharge pipe on the pump. When the pump is stopped, the check valve will protect the pump against excessive pressure and will prevent the pump from running backward. The check valve should be installed between the gate valve and the pump nozzle in order to permit its inspection. The gate valve is also useful in priming and starting the pump.

Keep the suction pipe short and direct. Use a suction pipe at least one size larger than the pump suction nozzle. Keep the suction pipe free of all air pockets.

Note: On suction lift the piping should be inclined up towards the pump inlet with eccentric reducers incorporated to prevent air locks.

Note: A spool piece should be installed in suction line so that the suction screen may be installed and removed.

4.14.2 Nozzle loads and piping

Customer to ensure all piping is installed according to design, which should result in nozzle loads below the acceptable limits. All piping supports and hangers must be set properly before operating equipment. Failure to do so may result in damage to pump. When installing suction and discharge nozzle piping, do not force piping to fit up to nozzles. Piping should not be strained in the cold static condition.

CAUTION Maximum forces and moments allowed on the pump flanges vary with the pump size and type. To minimize these forces and moments that may, if excessive, cause misalignment, hot bearings, worn couplings, vibration and the possible failure of the pump casing, the following points should be strictly followed:

- Prevent excessive external pipe load
- Never draw piping into place by applying force to pump flange connections
- Do not mount expansion joints so that their force, due to internal pressure, acts on the pump flange

Note: Piping should be independently supported. When hot liquids will be handled, expansion joints, bends or loops and hangers should be installed to prevent excessive strains on the pump nozzles. Customer should route piping in such a manner that disassembly of pump is not restricted.

4.14.3 Acid wash

CAUTION Pumps that will be subjected to acid wash or flushing of any type intended to clear the piping system of foreign material, must be by-passed to prevent debris from entering the pump. Failure to do so will result in corrosion damage to critical components and deterioration of non metallic parts. In addition, foreign material being flushed through the system may be introduced into the pump.

4.14.4 Bypass line

Customer to provide a suitable minimum flow by-pass system connected to pump discharge prior to first valve. The by-pass flow should be directed to the source of pump suction and designed to handle the minimum flow listed in the General Arrangement Notes. A back pressure device located downstream of the minimum flow valve may be required to suppress valve cavitation or downstream line flashing.

CAUTION Operation at low flow results in pump horsepower heating the liquid. A by-pass may be required to prevent vaporization and subsequent pump damage. Mechanical damage may result from

continuous operation at flows less than 25% of design operating point (see General Arrangement drawing & nameplate).

Note: Refer to the General Arrangement drawings & notes for pertinent data, specifically:

- Piping Notes
- Nozzle Forces & Moments
- Balancing Line
- Minimum Flow Bypass
- Warm Up Line

4.15 Final checks

CAUTION Check the tightness of all bolts in the suction and discharge pipework. Check also the tightness of all foundation bolts.

4.16 Final alignment check

CAUTION After grout has completely set, and pipes been connected to the pump, recheck alignment following the procedure performed in the previous sections.

4.17 Electrical connections

DANGER Electrical connections must be made by a qualified Electrician in accordance with relevant local national and international regulations.

It is important to be aware of the EUROPEAN DIRECTIVE on potentially explosive areas where compliance with IEC60079-14 is an additional requirement for making electrical connections.

It is important to be aware of the EUROPEAN DIRECTIVE on electromagnetic compatibility when wiring up and installing equipment on site. Attention must be paid to ensure that the techniques used during wiring/installation do not increase electromagnetic emissions or decrease the electromagnetic immunity of the equipment, wiring or any connected devices.

DANGER The motor must be wired up in accordance with the motor manufacturer's instructions (normally supplied within the terminal box) including any temperature, earth leakage, current and other protective devices as appropriate. The identification nameplate should be checked to ensure the power supply is appropriate.

A device to provide emergency stopping must be fitted.

If not supplied pre-wired to the pump unit, the controller/starter electrical details will also be supplied within the controller/starter.

For electrical details on pump sets with controllers see the separate wiring diagram.

CAUTION See Section 5.3, before connecting the motor to the electrical supply.

4.18 Protection systems

The following protection systems are recommended particularly if the pump is installed in a potentially explosive area or is handling a hazardous liquid. If in doubt consult Flowserve.

If there is any possibility of the system allowing the pump to run against a closed valve or below minimum continuous safe flow a protection device should be installed to ensure the temperature of the liquid does not rise to an unsafe level.

If there are any circumstances in which the system can allow the pump to run dry, or start up empty, a power monitor should be fitted to stop the pump or prevent it from being started. This is particularly relevant if the pump is handling a flammable liquid.

If leakage of product from the pump or its associated sealing system can cause a hazard it is recommended that an appropriate leakage detection system is installed.

To prevent excessive surface temperatures at bearings it is recommended that temperature or vibration monitoring are carried out.

5 COMMISSIONING, START-UP, OPERATION AND SHUTDOWN

CAUTION ***These operations must be carried out by fully qualified personnel.***

CAUTION Do not wipe down in the vicinity of rotating parts. If unusual noise or vibrations occur, secure the pump as soon as possible.

In the interest of operator safety, the unit must not be operated in excess of the nameplate conditions. Such operation could result in unit failure causing injury to operating personnel.

The unit must not be operated unless the coupling(s) guard(s) is bolted in place. Failure to observe this could result in injury to operating personnel.

CAUTION Before starting or while operating the pump, the pump and suction line must be completely filled with the liquid being pumped and the line must be properly vented. Rotating parts depend on this liquid for lubrication. The pump may seize if operated without liquid.

CAUTION The pump and suction line must be filled with liquid during start-up, operation, and shutdown periods.

CAUTION Never operate the pump with the suction valve closed, and never throttle the pump on the suction side.

CAUTION To reduce output volume, the discharge-line valve may be throttled – but do not operate the pump against a closed discharge valve for longer than 30 seconds.

CAUTION Operation at low flows results in pump horsepower heating the liquid. A flow bypass is required to prevent vaporization and subsequent pump damage. Mechanical damage may result from continuous operation at less than the minimum continuous stable flow (MCSF)—(see General Arrangement drawing notes).

CAUTION Do not operate the pump unless the mechanical seal receives continuous lubricating flush.

5.1 Commissioning

Commissioning of all equipment must be performed in accordance with specifications set forth in Chapter 9 'Commissioning' from API Recommended Practices 686/PIP REIE 686, First Edition.

5.2 Pre-operational checks

At initial start-up and after the equipment has been installed:

a) Ensure pump and piping are clean. Before putting the pump into operation, it should be thoroughly flushed to remove the rust preventive as well as any foreign matter which may have accumulated during installation. Take all possible care not to contaminate your system.
b) Check that the system and pump casing are vented and completely full of liquid.
c) Vent the mechanical seal system by following venting procedure in Section 5.2.2, *Mechanical seal*, and mechanical seal instructions in Section 10.1 of this User Instructions.
d) Ensure that mechanical seal is properly assembled and tightened.

CAUTION Most mechanical seals are equipped with locating spacers between the gland plate and shaft sleeve. Spacers must be removed before starting unit. Do not discard spacers; they are required to maintain proper seal setting during maintenance.

e) Turn rotor by hand or with strap to make sure it turns freely.
f) Check motor rotation by starting unit momentarily. Verify that the motor rotation matches that of the fluid coupling and pump.

The driver rotation must be checked before connecting coupling. Actual damage to the equipment and personal injury could result from operating the unit with wrong rotation.

g) Check torque of all bolting and plugs.
h) Ensure coupling is properly aligned and lubricated, and pump, fluid coupling, and driver are properly doweled (refer to Section 4, *Installation*).
i) Ensure all guards are in place.
j) Be sure that the driver has been prepared for operation in accordance with the manufacturer's instructions.

CAUTION Check that the driver oil or grease reservoir(s) have been filled to the proper level as described in the driver manufacturer's instructions.

k) Clean and flush bearing housings and lubrication system. Fill reservoir with oil to the proper level (refer to Section 5.2.1, *Lubrication*).
l) Ensure rotor is aligned within casing (refer to Section 6, *Maintenance*).

5.2.1 Lubrication

Operation of the unit without proper lubrication can result in overheating of the bearings, bearing failures, pump seizures and actual break-up of the equipment, exposing operating personnel to injury.

Remember that oil requires frequent replenishment at normal operating temperatures and very frequent replenishment at elevated operating temperatures. Oil is always subject to gradual deterioration from use and contamination from dirt and moisture. This deterioration and contamination will, in time, be harmful to the bearings and can cause premature wear. For these reasons, oil should be checked for contamination and deterioration regularly.

The frequency of oil change depends on the operating conditions and the quality of the lubricant. Oil should be checked for deterioration and contamination weekly during periods of operation. Mineral oils oxidize and should be replaced at no more than three month intervals. Longer intervals between replacements may be possible if a routine oil sampling program is used to monitor the oil condition.

5.2.1.1 Oil specifications

Straight mineral oils without additives are generally preferred. It should be a turbine type and not contain free acid, chlorine, sulphur or more than a trace of free alkali. Lubricating oils are identified by an ISO Viscosity Grade (VG) Number. The VG Number is the viscosity of the oil at 40 °C (104 °F) in centistokes. In the majority of instances, a turbine oil with a VG Number of 32 will meet the bearing lubrication requirements (see Section 5.2.1.2, *Oil temperature*).

Oil Characteristics	
Recommended ISO Viscosity Grade (VG) Number	**32**
Viscosity Index	**102**
Pour Point	**-7 °C (20 °F)**
Flash Point	**204 °C (400 °F)**

Lubricant must be compatible with all parts requiring lubrication. Refer to lube, seal, and lube oil console piping drawings and notes for information pertaining to your system.

5.2.1.2 Oil temperature

Cooling oil lubricating system is provided to supply cooled oil to the bearing housings reservoirs. If bearing temperature exceeds the above mentioned limits, make sure cooling water system is on and cooling water is being supplied to the heat exchanger on the cooling oil lubricating system.

CAUTION The minimum bearing oil temperature is 15 ºC (60 °F). The oil lubricating console reservoir is supplied with an immersion heater to maintain the minimum 15 ºC (60 °F) oil temperature. Oil in the reservoir of the oil lubricating system should not be below 15 ºC (60 °F) at pump start up time. If oil temperature is below 15 ºC (60 °F) in pump bearing housings reservoir, oil lubricating console should be started and the warm oil circulated to the pump prior to main pump start up.

5.2.1.3 Cleaning and filling the lubrication system prior to operation

CAUTION Before operating the pump, the lubrication system should be cleaned and checked per the following steps.

To clean the lubrication system:

a) Drain the oil from the bearing housings and refill with clean lubricant.
b) Drain and refill as required till clean lubricant is seen coming from the drain.
c) Refer to driver instruction book for instructions covering cleaning of driver bearings.

Check the housings per the following steps:

a) Assemble the Constant Level Oiler [3855] and adjust the oil level per the Constant Level Oiler Instructions and Drawings (see Section 10.1).
b) Remove the outboard bearing end cover [3266] and verify the oil level is a minimum of 6.4 mm (0.25 in.) above the bottom of the thrust bearing oil ring. Adjust the Constant Level Oiler [3855] and fill with additional lubricant if necessary.
c) Remove the inspection plugs on the inboard and outboard housings. Rotate the shaft 2-3 times and look for oil in the inspection ports. If no oil is observed, adjust the Constant Level Oiler [3855] and fill with additional lubricant till oil can be seen when the shaft is rotated.
d) Replace the outboard bearing end cover [3266] and re-torque the bolts.
e) Refer to driver instruction book for instructions covering checking of driver bearings.

CAUTION Operation of the unit with incorrect oil level setting can result in overheating of the bearings, lack of lubrication to the bearings, bearing failures, pump seizures and actual break-up of the equipment, exposing operating personnel to injury.

5.2.2 Mechanical seal

Your pump is typically shipped with the mechanical seal already installed. All mechanical seals are of the cartridge type design. The mechanical seal is designed to suit each application. This creates the correct seal loading face when seal gland is bolted in place.

Cartridge type mechanical seals are preset at the seal manufacturer's facility and require no field settings. The seal installation should be checked before start-up.

Note: Refer to the mechanical seal manufacturer drawings and instructions found in Section 10.1 of this manual for detailed information.

To remove mechanical seal from pump:
a) Install setting plates/eccentric washer in place.
b) Loosen drive collar.
c) Remove gland bolting.
d) Slide sleeve with mechanical seal [4200] from shaft.

Seal may be disassembled/inspected/reassembled per seal manufacturer's drawing and instructions in Section 10.1 of this manual.

After reassembly of seal, setting plates/eccentric washers must be removed before start up.

CAUTION Never run a mechanical seal dry, even for a short time.

5.2.3 Pump instrumentation set points

The following set points apply to these WXH Pumps which use a Balls /Balls bearing arrangement.

Bearing metal temperature:
- Normal 50 to 85 °C (120 to 185 °F)
- Alarm 90 °C (195 °F)
- Shutdown 95 °C (205 °F)

Bearing housing vibration:
- Normal 2.5 to 7.6 mm/s (0.1 to 0.3 in./sec)
- Alarm 10.2 mm/s (0.4 in./sec)
- Shutdown 12.7 mm/s (0.5 in/sec)

Pump shaft radial vibration:
- Normal 25 to 50 µm (1 to 2 mils)
- Alarm 75 µm (3 mils)
- Shutdown 114 µm (4 mils)

In specific cases it might be possible to exceed published levels above. Should pump operate in excess of shutdown levels, please contact Flowserve.

5.2.4 Motor instrumentation set points

Refer to the Instrumentation List and the vendor's instruction manual for specifics.

5.2.5 Variable speed coupling instrumentation set points

Refer to the Instrumentation List and the vendor's instruction manual for specifics.

5.3 Initial start-up procedure

CAUTION Ensure the pump is given the same rotation as the pump direction arrow cast on the pump casing.

a) Prepare the driver (and variable speed coupling, if included) for start up in accordance with the manufacturer's instructions.
b) Prime pump and ensure pump suction valve is open.

CAUTION Before starting or while operating the pump, the pump and suction line must be completely filled with the liquid being pumped. The rotating parts depend on this liquid for lubrication, and the pump may seize if operated without liquid.

c) Ensure pump recirculating line is open and free of obstructions.

The unit must not be operated unless all guards are in place. Failure to observe this caution could result in personal injury to operating personnel.

d) Discharge valve should be closed.
e) The suction valve should be WIDE OPEN. (Vent system to release entrapped air; close vent system after venting).
f) Suction strainer should be clean and completely free of debris.
g) Be sure that all valves in the suction and balance leakage lines are open. The minimum flow system must be open during starting and stopping and when discharge flow is less than the minimum flow specified on the General Arrangement drawing notes.
h) Make sure all gages are functioning.

Operation of the unit without proper lubrication can result in overheating of the bearings, bearing failures, pump seizures and actual break-up of the equipment exposing operating personnel to personal injury.

i) Make sure balance line valve is in locked open position. See General Arrangement drawing notes for balance line instructions.

CAUTION The flow of liquid which passes between the balance disc [6210] face and the counter balance disc [6220] face is reduced from the discharge pressure to slightly above suction pressure. This flow and pressure reduction counteracts the hydraulic thrust created by the impellers. Therefore, if balance disc line is closed when the pump is in operation, this counteraction is eliminated and rapid seizure will occur.

j) Check that cooling water is turned on and the proper flow rate is being circulated to the mechanical seal coolers, the pump stuffing boxes, and, if supplied, the motor and pump bearing housings.
k) Check that seal is vented by observing leakage from seal piping vent. Close vent when liquid is

emitted. Ensure that the mechanical seal system piping is clear and free of obstructions. Ensure that the magnetic separator isolation valves are open.

l) Prepare the driver (and variable speed coupling, if included) for start up in accordance with the manufacturer's instructions.
m) Start the driver and bring the unit up to speed.
n) As soon as pump is up to speed, slowly open discharge valve. This will avoid abrupt changes in velocity and prevent surging in the suction line.
o) Perform running checks

5.4 Operating checks

⚠ In the interest of operator safety, the unit must not be operated above the nameplate conditions. Such operation could result in unit failure causing injury to operating personnel.

CAUTION Operation at low flows results in pump horsepower heating the liquid. A bypass may be required to prevent vaporization and subsequent pump damage. Mechanical damage may result from continuous operation at flows less than min flow value (see General Arrangement drawing notes).

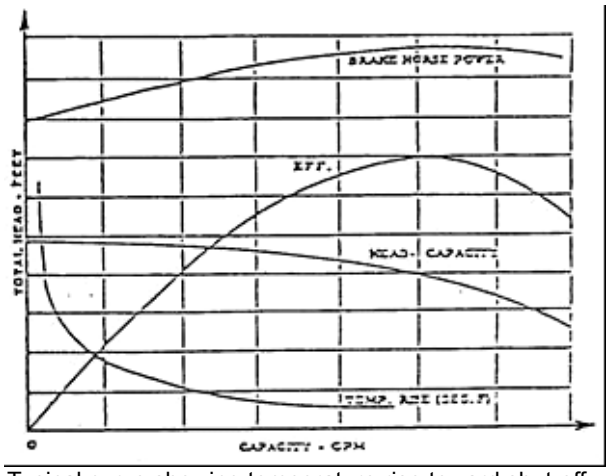

Typical curve showing temperature rise toward shut-off

⚠ Operation of the unit without proper lubrication can result in overheating of the bearings, bearing failures, pump seizures and actual break-up of the equipment exposing operating personnel to injury.

Immediately after start up, and frequently during running, check the following:

a) Check suction pressure and HP and IP discharge pressures.
b) Check differential pressure across the suction strainer.

CAUTION If pressure differential across suction strainer exceeds 0.35 bar (5 psi), shut down the pump immediately, and clean the suction strainer.

c) Check mechanical seal areas; there should be no visible leakage to the naked eye.
d) Check the mechanical seal water temperature. (Refer to Instrument List and/or mechanical seal drawing).
e) Check for unusual noises.
f) Check for adequate flow of cooling liquids.
g) Isolate and inspect the magnetic separators located in seal flush piping. (Refer to the seal piping drawing).

CAUTION Mechanical seals are particularly sensitive to impurities in the feed water system. To prevent damage to the mechanical seal faces, daily inspection and cleaning of the magnetic separators is strongly recommended.

CAUTION When disassembling the magnetic separators, make sure that the unit is isolated from the seal flush system using the bypass valves.

h) Check vibration levels are below those indicated on the Instrumentation List.
i) Check the pump and motor bearing temperatures. (Refer to the Instrumentation List).
j) After unit has been operated a sufficient length of time to reach normal operating temperature and condition, the unit is to be shut down and a hot coupling alignment check must be made (refer to Section 4, *Installation*).

⚠ Do not attempt any maintenance, inspection, repair or cleaning in the vicinity of rotating equipment. Such action could result in personal injury to operating personnel.

5.5 Normal start-up

The starting procedure to be followed for normal start up is the same as that for initial starting.

5.6 Securing the pump

a) De-energize driver circuit.
b) The pump should be shut down rapidly to protect the internal wearing parts which are lubricated by the liquid being pumped. Lubrication is reduced when a pump is stopped slowly, and seizure could result.

CAUTION If pump stops abruptly when driver is shut down, investigate for rotor binding. Take necessary remedial action before re-starting pump.

c) Close the pump suction and discharge valve, balance line, (and intermediate stage take off line valve if supplied).
d) Close valve in bypass line.
e) Turn off cooling water.

CAUTION If pump is subjected to freezing temperatures, the pump must be drained of liquid to prevent damage to pump.

6 MAINTENANCE

6.1 Security

It is the plant operator's responsibility to ensure that all maintenance, inspection and assembly work is carried out by authorized and qualified personnel who have adequately familiarized themselves with the subject matter by studying this manual in detail. (See also Section 1.6.2, *Personnel qualification and training*).

Any work on the machine must be performed when it is at a standstill. It is imperative that the procedure for securing the machine is followed, as described in Section 5.6.

On completion of work all guards and safety devices must be re-installed and made operative again.

Before restarting the machine, the relevant instructions listed in Section 5, *Commissioning, start up, operation and shut down*, must be observed.

Oil and grease leaks may make the ground slippery. Machine maintenance must always begin and finish by cleaning the ground and the exterior of the machine.

If platforms, stairs and guard rails are required for maintenance, they must be placed for easy access to areas where maintenance and inspection are to be carried out. The positioning of these accessories must not limit access or hinder the lifting of the part to be serviced.

When air or compressed inert gas is used in the maintenance process, the operator and anyone in the vicinity must be careful and have the appropriate protection.

Do not spray air or compressed inert gas on skin.

Do not direct an air or gas jet towards other people.

Never use air or compressed inert gas to clean clothes.

Before working on the pump, take measures to prevent an uncontrolled start. Put a warning board on the starting device with the words ***"Machine under repair: do not start"***.

DANGER With electric drive equipment, lock the main switch open and withdraw any fuses. Put a warning board on the fuse box or main switch with the words ***"Machine under repair: do not connect".***

6.2 Preventive maintenance schedule

Although your Flowserve pump has been designed for extended, trouble free service, certain preventive maintenance measures should be performed on a regular basis to ensure optimum performance. A well planned program of routine maintenance is the best assurance of dependable operation. The following preventive maintenance (PM) inspections are suggested as a minimum, and may be supplemental by the experience of the operating personnel.

Preventive maintenance inspections should include the following:

Preventive Maintenance Item	Instructions	Frequency
Suction Strainer	Check pressure differential between the gauges located on each side of the strainer.	Daily
Pump Suction and Discharge Flow Rates	Check suction and discharge pressure gauges for proper pump operation.	Daily
Mechanical Seal	Visually.	Daily
Instrumentation	Check all related pressure gauges, temperature detectors, etc. to detect any abnormalities.	Daily
Bearing Housings	Check sight gauges.	Daily
Auxiliary Piping	Check for leakage around connections, etc.	weekly
Shaft/Casing Vibration	Review all vibration data for any abnormalities and/or sudden changes in levels.	weekly
Bolting Tightness	Check external bolting for proper tightness.	Monthly
Cleanliness	General clean-up soiled areas.	Quarterly

6.3 General

Your Flowserve pump is a precision machine. Take every precaution to avoid damage or even slight burrs to any of the machined surfaces when dismantling the pump.

Before performing any disassembly, maintenance, or inspection on the unit, the following steps should be taken and warnings observed:

a) Lock and tag driver controls in the “off” position.
b) Isolate pump from system.
c) Drain pump of all fluid.

⚠ Do not attempt any maintenance, inspection, repair or cleaning in the vicinity of rotating equipment. Such action could result in injury to operating personnel.

⚠ When pump is handling hot liquid, extreme care must be taken to ensure safety of personnel when attempting to drain pump. Hot pumps must be allowed to cool before draining.

⚠ In the interest of operator safety when handling any heated parts protective gloves or other suitable protection must be worn.

⚠ Before attempting any inspection or repair on the pump, the driver controls must be in the “off“ position, locked, and tagged to prevent injury to personnel performing service on the pump.

⚠ Before attempting to disassemble the unit, the pump must be isolated from the system by closing the suction and discharge valves. The pump should be carefully vented to release casing pressure. Drain all liquid.

⚠ When the pump is handling toxic, flammable, corrosive, or extreme-temperature liquids, extra care must be taken when draining the pump to ensure the safety of personnel. Suitable protective devices must be worn when draining the pump. Liquids at extreme temperatures (hot or cold) must be allowed to reach safe temperature before draining.

6.4 Torque values

For pump hold down torque value (and driver, if Flowserve supplied) see Section 6.8, *Torques and clearances*, of this User Instructions book. Recommended Torque Values are selected to achieve the proper amount of pre stress in the threaded fastener. Maintenance personnel must insure that threads are in good condition (free of burrs, galling, dirt, etc.) and that commercial thread lubricant is used. Torque should be periodically checked to assure that it is at the recommended value.

⚠ When reassembling pump, all fasteners must be tightened to the proper torque value. Failure to observe this warning could result in injury to operating personnel.

6.5 Coupling removal

Remove coupling guard. Refer to coupling drawing and installation instructions for removal. Remove coupling bolting and remove the spacer piece. Loosen setscrews in coupling lock nut and remove coupling lock nut [7411].

The coupling hub has a shrink fit to the pump shaft. The use of a puller and heat will be required to remove it from the shaft.

Note: Remove pump half coupling hub by heating to approximately 149 ºC (300 ºF) in successive stages from periphery of coupling toward center. If equipped with a gear type coupling, NEVER APPLY AN OPEN FLAME TO COUPLING HUB TEETH.

6.6 Dismantling procedure

6.6.1 General

a) Remove all auxiliary piping and instrumentation that will interfere with disassembly and drain oil from bearing housings.

⚠ Use extreme caution not to expose maintenance personnel to hot liquids when removing auxiliary piping or draining bearing housings.

b) Remove temperature detectors (if supplied) from bearing housings.
c) Remove shaft vibration probes (if supplied) from bearing housings.
d) Install mechanical seal setting plates/eccentric washer.
e) Loosen mechanical seal gland bolting and drive collar setscrews of mechanical seals.
f) A removable pedestal has been supplied with the pump as an assembly fixture. When removing the pump from bedplate, it is recommended that the pedestal and pump be removed as single unit. When lifting the pedestal, use (4) lifting lugs located on pedestal.

Note: When dismantling the pump, refer to Sectional Assembly drawing, found in Section 8 of this User Instructions book.

6.6.2 Thrust bearing removal

a) Drain oil from bearing housings [3230].

⚠ Use extreme care to prevent injury when draining hot oil.

b) Remove capscrews and bearing end cover [3266] from thrust bearing housing [3230]. Remove shims [3126.3] and circular joint ring [4595.6].
c) Loosen setscrews in pump side flinger [2540.2] and slide it back on the shaft towards the mechanical seal.
d) Remove capscrews and lock-washers from pump-side cover [3260.3]. Slide the end cover with shims and circular joint ring towards the mechanical seal.
e) Carefully lift and remove oil ring [3861] from locating sleeve [2483.2] and bearing housing.

⚠ In the interest of operator safety when handling any heated parts, protective gloves or other suitable protection must be worn.

f) Remove the dowel pins and capscrews which secure bearing housing [3230] to the casing.
g) Carefully slide bearing housing [3230] from thrust ball bearing [3013].
h) Release the locking tabs of bearing lock-washer [2905.4]. Loosen and remove bearing locknut [3712.2] and lock-washer.
i) Remove locating sleeve [2483.2].
j) Remove thrust ball bearing [3013] using a puller that will bring pressure against inner bearing race only. (See Section 6.7.8, *Bearings*).
k) Remove thrust bearing shims [3126.2/3/4/5/6], measure and record thickness and tie together, as they are needed for reassembly purposes.
l) Remove pump-side bearing end cover [3260.3] with shims, circular joint ring [4595.6] and flinger [2540.2] from shaft.

6.6.3 Radial bearing removal

a) Remove coupling lock nut [7411] & coupling key [6700.1] from pump shaft [2100].
b) Drain oil from bearing housings [3220].

⚠ Use extreme care to prevent injury when draining hot oil.

c) Loosen setscrews in flingers [2540.1]. Remove coupling-side flinger [2540.1] from pump shaft [2100]. Slide pump-side flinger back on the shaft towards the mechanical seal.
d) Remove capscrews from coupling-side end cover [3260.1] and slide end cover back on shaft towards the mechanical seal.
e) Remove capscrews and dowel pins which secure bearing housing to the casing.
f) Carefully slide bearing housing [3220] from plain ball bearing [3011].
g) Release the locking tabs of bearing lock-washer [2905.1]. Loosen and remove bearing locknut [3712.1] and lock-washer.
h) Remove locating sleeve [2483.1].
i) Remove plain ball bearing [3011] using a puller that will bring pressure against inner bearing race only. (See Section 6.7.8, *Bearings*).
j) Remove pump-side bearing end cover [3260.1] and flinger [2540.1] from shaft.
k) Carefully remove the oil ring [3861] from locating sleeve [2483.1] and bearing housing.
l) Remove capscrews from pump-side end cover [3260.1]. Remove coupling-side end cover from shaft.

6.6.4 Mechanical seal removal

Refer to mechanical seal instructions (located in Section 10.1) for detailed information on seals.

a) Loosen capscrews securing the mechanical seal setting plates. Rotate setting plates in the space between the gland and drive collar. Retighten the capscrews. Do this on both ends of pump.
b) At both ends of pump, remove gland hex nuts and washers from mechanical seals [4200]. Loosen setscrews in drive collar that hold seal to pump shaft [2100] and remove seals (intact as units), with sleeve and circular joint rings from pump shaft [2100]. Mark/tag each seal assembly for inboard or outboard location.

6.6.5 Stuffing box housing removal

a) At thrust end of pump, remove capscrews that hold stuffing box housing [4110] in place.
b) Place eyebolts in top of stuffing box housing [4110] and carefully remove housing over the end of pump shaft. Circular joint ring [4595.5] should come off with housing.

6.6.6 Balance disc removal

a) Loosen the setscrews in balance disc retaining ring [2530] and remove ring.
b) Push shaft [2100] towards thrust bearing end to help facilitate the removal of the retaining ring sleeve [2482]. It will be necessary to push the balance disc [6210] inboard so that the retaining ring sleeve [2482] may be easily removed from its groove. Heat should not be applied to the balance disc in order to move inboard (loose fit rotor). Make sure rotor does not move inboard when moving balance disc inboard.

Note: Do not use a pry to facilitate removal of the retaining ring sleeve.

c) Remove retaining washers [3126.1] after retaining ring sleeve [2482] is removed. Record the number and size of retaining washers [3126.1] for use in reassembling the pump. It is recommended the retaining washers be tied together.

d) Two screws may be inserted into the back of the balance disc to facilitate removal. There is a circular joint ring [4595.4] located between the balance disc [6210] and shaft [2100]. Slide the balance disc [6210] out carefully so as not to damage the circular joint rings. Remove key [6700.3] from shaft [2100].

CAUTION The utmost of care should be taken when removing this balance disc as it may gall and pick up if not removed properly.

6.6.7 Disassembly of pump

Note: When moving pump, the pump should remain bolted to its assembly fixture and be moved with the assembly fixture.

Note: Identify all impellers, keys, stage casings and diffusers by marking them as they are removed with the appropriate stage number so that they are reassembled in the same location.

Note: Impellers are a loose fit on the shaft. All impellers [2200] are removed and installed over the thrust (outboard) end of the pump shaft [2100].

Clean exposed shaft areas of any dirt or burrs. Protect bearing areas of shaft by covering with hard sheet packing or similar material.

6.6.7.1 Discharge casing removal

a) Remove the nut/studs and capscrews that hold the discharge casing feet and suction casing to the assembly fixture. Pump is located on assembly fixture by bolts (drive end feet) and gib blocks (non-drive end feet)
b) Loosen the main bolting nuts [6580] at suction casing end of the tie bolts [6571.1]. Do not remove nuts [6580] at this time.

Note: Loosen by alternating diagonally opposite nuts.

c) Block inboard end of shaft such that the shaft does not slide through the impellers when hoisting the unit into a vertical position. Rig the pump assembly to an overcasing crane and remove pump from pedestal, hoisting it into a vertical position. Discharge end of pump should be upward. Stand the pump assembly on blocking over an opening so that the shaft [2100] portion, protruding past the suction casing [1130], does not contact the floor.
d) Remove nuts [6580] and washers [2905.2] from tie bolts at the suction end of pump. Remove the tie bolts [6571.1] by sliding them through the discharge casing [1140].
e) Sling straps around feet of discharge casing [1140] and lift off of last stage stage casing/diffuser [1150.3/1410.2]. Counter balance disc [6220] and circular joint ring [4595.3] will come off with discharge casing. Circular joint ring [4595.3] will remain in discharge casing during disassembly.

Note: Use care when sliding assembly off shaft to prevent the counter balance disc from contacting the shaft.

f) Remove capscrews and lockwashers holding counter balance disc to inside of discharge casing [1140]. Remove counter balance disc [6220] and circular joint ring [4595.3] from discharge casing [1140].

6.6.7.2 Rotor disassembly

a) Remove last stage diffuser [1410.2]. Since it is a tight fit on the stage casing [1150.3], slight heat may be required to remove diffuser from stage casing.
b) Remove last stage impeller [2200.3] and key [6700.2] from shaft. If impellers cannot be removed from pump shaft, slight heating may be used to enlarge impeller bore. Apply heat (torch with rosebud tip) to periphery of impeller until temperature reaches 90 ºC (200 °F) minimum to 105 ºC (225 °F) maximum. Use tempilstick to determine temperature.

Note: Impellers have a loose fit onto the shaft.

c) Remove last stage casing [1150.3]. If stage casing is hard to remove, slight heat may be applied at fit. Circular joint ring [4595.2] is located between faces of stage casings. Pry slot has been provided on outer diameter of stage casings.
d) Continue to remove impellers [2200.2], keys [6700.2], stage casings [1150.2], diffuser [1410.1], and circular joint rings [4595.1] using same procedure described in *b* and *c*.
e) After first stage impeller [2200.1] is removed, casing wear ring [1500.1] will remain in suction casing [1130], along with circular joint ring [4595.1].
f) Remove shaft [2100].

6.7 Inspection & renewal of parts

Note: Wire brush the pump parts thoroughly. Clean off all scale, carbon, etc. Examine parts for wearing, corrosion and erosion.

6.7.1 Shaft

Having completely dismantled the pump, set the bare pump shaft [2100] on rollers or V blocks at the bearing areas and check run out. Rollers must be wide enough so as not to cause indentations in

areas. The maximum run out should not be more than 0.05 mm (0.002 in.) total indicator reading.

Note: Do not use bearing centres to check run out.

6.7.2 Balance disc

Check balance disc [6210] for wear, cracks, and pickup. Check the counter balance disc [6220] and make sure it has not rubbed. If it is worn, replace.

6.7.3 Stage casing wear rings & casing wear rings

The casing wear rings [1500.1/2] and stage casing wear rings [1500.1/2] are renewable and should be replaced when badly grooved and/or when performance does not meet system requirements.

Casing wear rings [1500.1/2] or stage casing wear rings [1500.1/2] can be drilled at one or more places and split. Rings too hard to drill can be weakened by grinding with a small hand grinder.

To replace casing wear rings [1500.1/2] or stage casing wear rings [1500.1/2], it is advisable to shrink them by freezing. Replacement bushings and casing wear rings will be 3.2 mm (1/8 in.), undersize. Install rings, and then turn to its original running clearance.

6.7.4 Impellers

If the clearances between the impeller wear areas and the stationary wearing areas need to be renewed, undersize stationary wearing parts will be furnished. Impeller wear rings [2300] (if supplied) can be turned to remove light grooving. Do not turn beyond this.

6.7.5 Counter balance disc

The counter balance disc [6220] is bolted to the discharge casing [1140] with circular joint ring [4595.3], socket casing capscrews and washers. Make sure counter balance disc is not cocked during installation.

6.7.6 Mechanical seals

Refer to seal drawing and instructions in this User Instructions book.

6.7.7 Retaining ring

Inspect retaining ring [2530] for grooves, pitting, scoring or worn setscrew threads. Worn retaining ring must be replaced. If threads are not too badly worn, redress threads.

6.7.8 Ball bearings

Ball bearings require proper handling and installation to ensure optimum performance. The following information is intended as a minimum to ensure that the bearings are handled and installed properly.

6.7.8.1 Bearing handling

a) Do not remove new bearings from their storage package except to inspect the bearings, when stored for a long period of time, or just prior to their installation.
b) Work area must be clean to ensure that no dirt or other contaminates will enter the bearings. Handle bearings with clean, dry hands and with clean, lint free rags. Lay bearing on clean paper and keep covered. Never expose bearings on a dirty bench or floor.
c) Do not wash a new bearing. It is already clean, and the preservative should not be removed.
d) Before mounting, be sure shaft bearing areas are clean and free of nicks and burrs. Check the dimensions of these areas to ensure proper fit of bearings.

6.7.8.2 Bearing installation

a) There are two simple methods of providing a heat source for expanding the inner race of the bearings to facilitate mounting.
   In the first method, bearings still wrapped in their original intimate wrap are placed on a shelf in a temperature controlled oven, or in an enclosure lined with foil and heated with electric light bulbs. A temperature of 66°C (150°F) for one half hour should be sufficient.
   A second method consists of locating a light bulb (100 to 150 watt) in the bore of the bearing. Primarily the light bulb will heat the inner ring, and the bearing can usually be handled by the outer ring without special gloves. Care must be taken to keep the bearing clean and uncontaminated.

Note: Light bulbs are located in the bore of the bearings as a heat source for expanding the inner races of bearings for mounting.

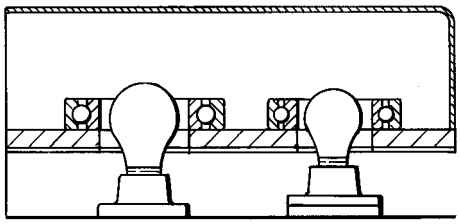

CAUTION The old and popular method of heating bearings in an oil bath is definitely discouraged. Heating inner bearing race with a gas torch is prohibited. In either case, it is difficult to control the heating rate and final temperature, and even more difficult to keep the oil and/or bearing clean.

b) When bearings are installed on shaft or sleeve, make sure bearing is installed squarely and is firmly seated. Hold bearing in place until it has cooled sufficiently so that it will not move from position. Cover bearings to protect them from dirt.

CAUTION When installing bearings, the mounting pressure should never be transmitted through the balls. Apply the mounting force directly against and only against the inner ring.

c) When installing bearing housing onto the bearing and shaft, the bearing housing bores and bearing outside diameter should be coated with the grease or lubricating oil to facilitate assembly.

6.7.8.3 Bearing removal

If bearings cannot be removed with the tools available, never use a torch - under any circumstances. Split the outer ring with a small hand grinder, saw through the ball/roller retainer, and split the inner ring about three quarters through with a grinder and break with a cold chisel while supporting the pump shaft below the inner race.

CAUTION Do not use cold chisel when shaft is supported by bearing bush.

6.7.8.4 Bearing cleaning

Note: Do not attempt to inspect condition of bearings until they are cleaned.

a) Solvent for cleaning bearings should be in a clean container. Place bearings in solvent and let soak for a short time. Slosh the bearing around near the top of the container, giving it a turn now and then until it is clean. Rinse in a clean container of clean solvent.

CAUTION Do not spin dirty bearings. Rotate them slowly while washing.

b) Dry the thoroughly cleaned bearings. If an air hose is used for drying, use clean, dry air.

CAUTION Do not allow the bearing to spin by force of air. Hold both the inner and outer rings to prevent bearing from spinning.

c) Inspect bearings immediately. If there is any question as to the condition of a bearing, it must not be reused. There are many conditions that contribute to the deterioration of the bearings. A qualified bearing representative should be consulted if there is any question as to bearing condition.

d) Inspected bearings which will be reused should be packed with new grease or dipped in clean lubricating oil, covered with clean lint free rags or other suitable covering, and placed in a clean box or carton until ready for installation.

Note: Under no circumstances are the bearings to be left exposed, they should be protected by wrapping or covered.

6.7.9 Circular joint rings

Renew all circular joint rings [4595.1/2/3/4/5/6].

6.8 Torques and clearances

6.8.1 Clearances

- Impellers [2200] front hub to casing wear rings [1500]: 0.30 – 0.36 mm (0.012– 0.014 in.)
- Impellers [2200] back hub to ch. ring bushings [1500]: 0.30 – 0.36 mm (0.012– 0.014 in.)
- Balance disc [6210] to counter balance disc [6220]: 0.30 – 0.36 mm (0.012– 0.014 in.)

6.8.2 Torque values

Torque values listed below are selected to achieve the proper amount of pre-stress in the threaded fastener. Maintenance personnel must ensure that threads are in good condition (free of burrs, galling, dirt, etc.) and that commercial thread lubricant is used. Torque should be periodically checked to ensure that it is at the recommended value.

Radial bearing housing [3220] to suction casing [1130] bolting	170–200 (127–150)	N·m (lbf·ft)
Thrust bearing housing [3230] to discharge casing [1140] bolting	170–200 (127–150)	N·m (lbf·ft)
Mechanical seal [4200] to suction casing [1130] and stuffing box housing [4110] bolting	150-157 (110-116)	N·m (lbf·ft)
Stuffing box housing [4110] to discharge casing [1140] bolting	115–122 (85–90)	N·m (lbf·ft)
Counter balance disc [6220] to discharge casing [1140] bolting	115–122 (85–90)	N·m (lbf·ft)
Bearing end cover [3266] to thrust bearing housing [3230] bolting	30–34 (22–25)	N·m (lbf·ft)
Tie bolt nuts [6580]	3860–4067 (2850–3000)	N·m (lbf·ft)
Pump to pedestal (coupling side)	962–997 (710–735)	N·m (lbf·ft)
Pump to pedestal (thrust bearing side)	237–247 (175–182)	N·m (lbf·ft)
Pedestal to baseplate	400–420 (295–310)	N·m (lbf·ft)

6.9 Rebuilding pump for installation

6.9.1 Rebuilding pump

a) Place pump shaft [2100], first stage impeller key [6700.2] and impeller [2200.1] on horses/V blocks supported at the mechanical seal area of the shaft. Block to prevent rolling.
b) Rig the suction casing [1130] to an overcasing hoist and lay it on blocking over an opening so that the shaft can be vertically inserted without contacting the blocking.

CAUTION Do not damage the circular joint ring [4595.1] during installation process.

Note: In the interest of operator safety when handling any heated parts protective gloves or other suitable protection must be worn.

c) Install shaft [2100] with the first stage impeller [2200.1], into the suction casing [1130]. Block the shaft.

Note: Impellers have a loose fit onto the shaft.

Note: Stage casing is a loose fit into the suction casing [1130].

d) Install the stage casing [1150.1]/diffuser [1410.1] assembly, with its casing wear ring [1500] and joint rings already in place, into the suction casing [1130].
e) Install the second stage impeller [2200.2] and its key [6700.2] onto the shaft [2100].
f) Continue to install stage casings [1150.2/3] diffuser [1410.1/2] assembly, stage casing wear rings [1500.1], circular joint rings [4595.1], impellers [2200.2], and impeller keys [6700.2] for the remaining stages.
g) Install last stage diffuser [1410.2], onto stage casing [1150.3], impeller [2200.3] and impeller key [6700.2].

Note: Diffusers [1410.1/2] have a loose/tight fit onto the stage casing [1150.1/2/3].

h) Install circular joint ring [4595.3] into its groove in the counter balance disc [6220]. Install counter balance disc into discharge casing [1140] using capscrews and lockwashers. Torque to recommended value. (See Section 6.8.2, *Torque values*).

CAUTION Do not damage circular joint ring [4595.3] during installation process.

i) Rig discharge casing to overcasing hoist and lower into place over the last stage diffuser [1410.2] and stage casing [1150.3] making sure circular joint ring [4595.2] is in the groove on the face of discharge casing.
j) Install all tie bolts [6571.1/2] through holes in discharge casing [1140] and move down through holes in suction casing [1130]. If they were removed previously during dismantling, install washers [2905.2] and nuts [6580] at the discharge end of the tie bolts. Bottom out the tie bolts into the nuts. Use a good thread compound on the studs.
k) Install washers [2905.2] and nuts [6580] at suction casing end of tie bolts. Do not torque at this time, hand tighten only.
l) Lift and manoeuvre assembled pump into a horizontal position and set onto pump assembly fixture.

Note: Make sure radial end of shaft is blocked towards the thrust end; otherwise shaft may slide out of the loose fit impellers.

m) Lubrication between pedestal and pump feet may be required to allow pump feet to slide when torquing tie bolts.
n) Studs and locking nuts are provided for the four feet – two in each casing. Tighten the suction

feet to the assembly fixtures with studs and locking nuts to a torque value less than ½ the recommended value. (See 6.8.2, *Torque values*). Once the discharge casing feet line up with tapped holes in assembly fixture tighten these bolts in the same manner as the suction casing. Do not torque hold down bolting at this time.

o) Use feeler gage to make sure all feet are contacting assembly fixture pump pads before tightening the tie bolts. After tightening the distance between any foot and a pedestal should be 0.25 mm (0.010 in.) or less.

p) Start torquing nuts [6580] at suction end of pump. Be sure that suction and discharge casings remain parallel while torquing. When tightening nuts, tighten diagonally opposite nuts to ensure casing is pulled into place evenly. Torque to recommended value. (See Section 6.8.2, *Torque values*).

CAUTION No matter how discharge casing is pulled into place, it is vital that it is pulled square. Don't let any part of the casing get out of parallel by more than 1.5 mm (0.06 in.).

q) Check the distance between casings. Using a bolt or bar and feeler gauge, measure all around the pump casing circumference. Adjust torque on nuts [6580] until casings are parallel within 0.25 mm (0.010 in.). Ensure the rotor turns freely.

r) Install gib blocks as explained in Section 4.11, *Doweling pump and driver.*

6.9.2 Rotor end play / balance disc installation

The total end play will be found to be approximately 8 – 11 mm (5/16 - 7/16 in.). However, the exact dimension for each pump must be determined to be assured of adequate axial clearance between the rotating components and stationary parts.

a) Push rotor gently outboard as far as it will go. On outboard end of shaft, install balance disc assembly spacer as shown below, assemble shims [3126.1] as necessary, retaining ring sleeve [2482] and retaining ring [2530]. Tighten setscrews.

Note: Front face portion of the balance disc assembly spacer should butt up against back hub of last stage impeller [2200.3]. (All impellers should be locked together). The amount of shims used will not be the same as during final assembly. The dimensions of the assembly spacer are shown below for reference.

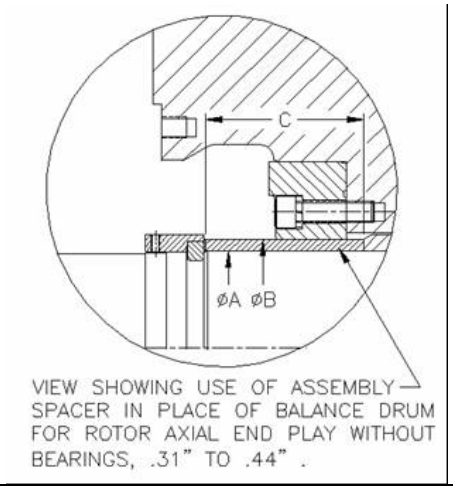

BALANCE DISC ASSEMBLY SPACER DIMENSIONS

Pump type	A(ID)	B(OD)	C(Length)
3X10WXH	66.5 mm (2.62 in.)	76.2 mm (3.00 in.)	96.8 mm (3.81 in.)
3X11WXH	76.2 mm (3.00 in.)	88.9 mm (3.50 in.)	117.3 mm (4.62 in.)
4X12WXH	91.9 mm (3.62 in.)	114.3 mm (4.50 in.)	128.5 mm (5.06 in.)
6X14WXH	108.0 mm (4.25 in.)	131.8 mm (5.19 in.)	138.2 mm (5.44 in.)

b) Pull the rotor assembly inboard as far as possible. Put masking tape on shaft per following sketch. Place a straight edge across the discharge casing, rest it on the shaft, and mark tape as shown.

c) Push rotor gently outboard as far as it will go. Mark tape again, as above. Block coupling end of shaft to hold it outboard.

CAUTION Do not push rotor back & forth more than once or twice as damage to close running clearances may result.

d) Measure the distance between the two marks. This distance will be divided into half. Mark this line; it represents the desired impeller/diffuser position.

e) Loosen setscrews and remove retaining ring [2530], retaining ring sleeve [2482], shims [3126.1] and assembly spacer.

f) Install balance disc key [6700.2] into shaft [2100].

g) Install circular joint ring [4595.4] into inner diameter groove of balance disc [6210].

h) Balance disc [6210] has a loose fit to the shaft [2100]. Install balance disc [6210] onto shaft. Install shims [3126.1], retaining ring sleeve [2482], and retaining ring [2530], and tighten setscrews.

i) Push rotor gently inboard as far as it will go. Bring balance disc [6210], shims [3126.1] and retaining ring sleeve [2482] metal to metal.

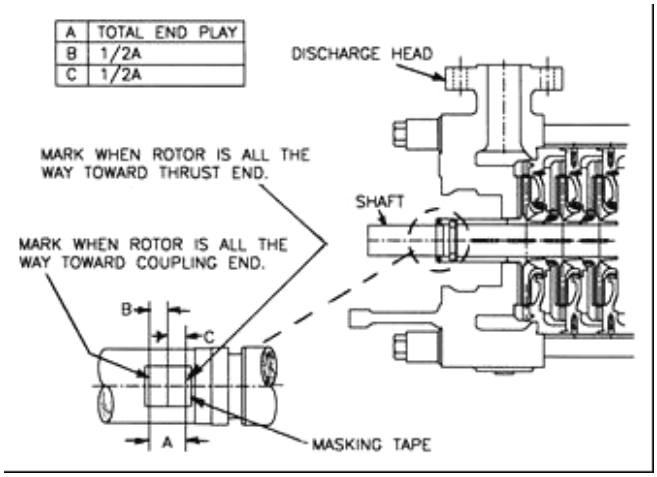

j) Check with straight edge to see if rotor is now in desired position. That is, does the straight edge fall on middle line on masking tape.
k) If the rotor is not properly positioned, add or subtract shims [3126.1] at balance disc [6210] to correct alignment.

6.9.3 Installation of outboard stuffing box housing

a) Renew circular joint ring [4595.5] and assemble to circular joint ring groove on stuffing box housing [4110].
b) Lift and install stuffing box housing [4110] over the outboard end of shaft [2100].
c) Enter stuffing box housing [4110] into its fit of the discharge casing. Install capscrews.
d) Tighten capscrews using utmost care to draw the stuffing box housing [4110] up parallel to its mating face. Torque to recommended value. (See Section 6.8.2, *Torque values*).

6.9.4 Checking rotor vertical lift

It is necessary to check and record the vertical lift of the rotor within the casing.

a) Place a dial indicator on the upper portion of the suction and discharge casings, with the indicator tip resting on the top of the shaft. Zero the indicator.
b) Using a bar and a block of wood under the shaft, lift the shaft and record the movement. Take measurements at both ends of the pump.
c) The minimum acceptable vertical movement is the impeller ring clearance on the suction end of the pump and the minimum counter balance disc/balance disc clearance on the discharge end of the pump.
d) If this minimum movement is not obtained, the cause must be investigated and corrected.

6.9.5 Shaft alignment

a) Install inboard mechanical seal [4200]. Do not tighten sleeve set screws as the shaft must be free to slide.
b) Slide inboard flinger [2540.1] up against the mechanical seal [4200], and rest on the shaft [2100].
c) Slide inboard bearing cover [3260.1] and circular joint ring on shaft.
d) Install disc spacer [3645].
e) Heat ball bearing [3011] and install on shaft. (See Section 6.7.8, *Bearings*).
f) Install locating sleeve [2483.1], bearing lockwasher [2905.2] and locknut [3712.1], and tighten. Set locking tabs of lockwasher.
g) Assemble bearing housing [3220] into position over the ball bearing [3011]. Install dowel pins and snug down capscrews. Install both the horizontal and vertical adjusting screws in the bearing housing mounting flange. Remove dowel pins.
h) Assemble oil ring [3861] on journal sleeve locating sleeve [2483.1]. Apply a layer of liquid gasket to machined surface of end covers [3260.1/2]. Assemble bearing end covers to bearing housing. Install capscrews. Torque capscrews to proper value.
i) Install coupling-side flinger [2540.2]. Do not tighten setscrews at this time.

6.9.6 Balance disc and thrust bearing setting

a) Slide pump-side end cover [3260.3] and circular joint ring [4595.6] on the shaft.
b) Slide schnoor spring spacer into bore of pump-side bearing end cover.

CAUTION This spacer replaces the schnoor springs [2905.4] during alignment assembly but will be removed before final assembly. The dimensions of the assembly spacer are shown below for reference.

BALL BEARING ASSEMBLY SPACER DIMENSIONS			
Pump type	**ID**	**OD**	**Thickness**
3X10WXH	85.5 mm (3.37 in.)	119 mm (4.69 in.)	$3.25^{-0.25}$ mm ($0.128^{-0.001}$ in.)
3X11WXH	85.5 mm (3.37 in.)	119 mm (4.69 in.)	

c) Install shims [3126.2/3/4/5/6] against shaft shoulder if amount was recorded at disassembly. If this is an initial assembly, start with a total shim thickness of approximately 1.50 mm (0.060 in.).
d) Assemble “Dummy Bearing” to shaft. It is recommended for initial pump assembly (pump being assembled for “rotor centralization check”), that a “Dummy Bearing” (not furnished)

be substituted for the double row thrust bearing [3013]. This will ease the assembly and disassembly process in the event shims [3126.2/3/4/5/6] have to be added or removed between thrust bearing and shoulder of shaft. (A “Dummy Bearing” can be made by taking a used set of ball bearings and opening up the bore so it has a 0.013 mm (0.0005 in.) to 0.025 mm (0.001 in.) loose fit to the shaft). Compare width of outside bearing races with new bearing races. Differences must be compensated when adjusting for 0.254 mm (0.010 in.) to 0.381 mm (0.015 in.) end play.

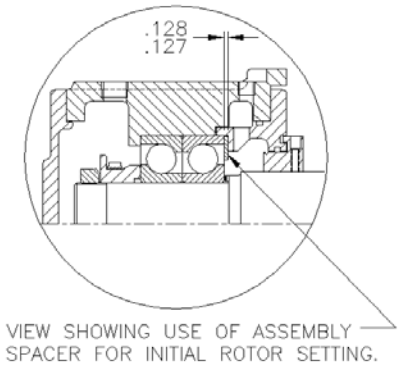

e) Install journal sleeve locating sleeve [2483.2], lockwasher [2905.4] and locknut [3712.2], and tighten.

Note: Do not set locking tab of lockwasher at this time; “Dummy bearing” will have to be removed.

f) Carefully install bearing housing [3230] into position over the thrust ball bearing [3013].
g) Install inboard bearing cover [3260.3] with assembly spacer and snug screws.
h) Install dowel pins and bearing housing to casing capscrews and snug down capscrews. Install both the vertical and horizontal adjusting screws in the bearing housing mounting flange. Remove dowel pins.
i) Place a dial indicator on the upper portion of the suction and discharge heads, with the indicator tip resting on the top of the shaft. Zero the indicator.
j) Using the vertical adjustment screws raise the inboard end of shaft half the recorded distance of the vertical lift for that end. Tighten both vertical adjustment screws evenly to equal amounts.
k) Repeat the previous step on thrust end, and then recheck the radial end. Pump shaft should turn free with no indication of binding or rubbing.
l) Install the dowel pins in the housing while watching the indicator. If the shaft moves more than 0.025 mm (0.001 in.) remove the dowel pins and realign the shaft as in the previous steps. Tighten all the capscrews and ream new dowel pin holes. Install the dowel pins and loosen the adjusting screws.
m) If the original dowel pin locations were acceptable tighten the capscrews and loosen the adjusting screws.

Note: Pump shaft should turn free with no indication of binding or rubbing.

n) With dial indicator still at the inboard coupling end of the pump shaft [2100], push the shaft toward the coupling end and check the dial indicator reading.

Note: Do not force, as rotor will stop when balance disc [6210] contacts counter balance disc [6220].

o) If the dial indicator shows zero, less shims are required between the thrust bearing and shaft. If the dial indicator reads more than 0.076 mm (0.003 in.), shims must be added accordingly. Calculate the amount of shims to add [3126.1/2/3] from between the thrust bearing [3013] to obtain an axial disc clearance of 0.025 to 0.076 mm (0.001 to 0.003 in.)
p) Remove thrust bearing housing [3013] and dummy bearing if necessary. Change the amount of shims to obtain the 0.025 to 0.076 mm (0.001 to 0.003 in.) reading on the indicator.
q) Record shim thickness.
r) Push the shaft toward the outboard end of the pump. The thrust bearing [3013] should have 0.254 to 0.381 mm (0.010 to 0.015 in.) of clearance. Inboard bearing cover [3260.3] face or the bore where the schnoor springs sit may need to be machined to obtain correct axial play.

6.9.7 Final thrust bearing assembly

a) Remove thrust bearing housing [3230].
b) Remove locknut [3712.2], lockwashers and locating sleeve [2483.2]. Remove dummy thrust bearing from shaft. Remove assembly spacer. Remove inboard end cover.
c) Install outboard mechanical seal [4200]. Do not tighten sleeve set screws as the shaft must be free to slide.
d) Position flinger [2540.2] onto shaft and place in the approximate position. Position inboard end bearing cover [3260.3] with circular joint ring [4595.1] onto shaft against mechanical seal [4200].
e) Install the schnoor disc springs [2905.4] into the bearing cover bore [3230]. (Internal diameter of schnoor disc springs should be touching when assembled).
f) Install shims [3126.2/3/4/5/6]

Note: Ensure proper thickness of shims [3126.1/2/3] is seated against shoulder on shaft.

g) Install the thrust ball bearing [3013] on the shaft. It will need to be heated to 110 ºC (230 °F). (See Section 6.7.8, *Bearings*). Install on the shaft in the back to back position as shown in sketch.

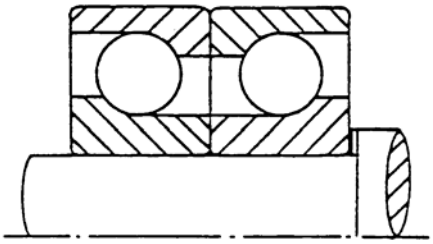

h) Immediately after installing the bearings, slide on the locating sleeve [2483.1], and tighten with the locknut [3712], torque nut 1/8 to 1/4 turn. Once the bearing cools, remove the locknut [3712] and install lockwasher [6541]. Re-tighten locknut and torque 1/8 to 1/4 turn. Bend over the appropriate lockwasher tab into one of the locknut slots. Pour a small amount of oil onto thrust ball bearing assembly [3013].
i) Carefully assemble bearing housing [3230] into position over the thrust ball bearing [3013].
j) Install dowel pins and bearing housing to casing capscrews and tighten to the proper torque value.
k) Torque radial bearing [3220] housing bolting at this time.
l) Install oil ring [3861] onto locating sleeve [2483.2].
m) Assemble inboard bearing end cover [3260.3] with shims [3126.2/3/4/5/6] and circular joint ring [4595.1] to bearing housing [3230].
n) If necessary apply a layer of liquid gasket to the machined surface of end cover [3260.3]. Install end cover with capscrews. Tighten capscrews to proper torque value.
o) Tighten setscrews in mechanical seal drive collars to shaft.

CAUTION Mechanical seal spacer must be removed before start-up.

p) Position flingers [2540] to bearing housings [3220/3230]. Maintain a 0.76 mm (0.030 in.) gap between housing and flinger. Tighten setscrews that hold flingers to shaft.
q) Using a strap, rotate pump shaft to be sure rotor is properly aligned and does not bind.

CAUTION Do not rotate pump shaft excessively. Internal parts depend on liquid being pumped for lubrication.

6.10 Final pump assembly

a) Move pump and pedestal (assembly fixture) as a unit to the bedplate using the four lifting lugs located on pedestal (do not lift unit by the pump or nozzles).
b) Align pedestal onto bedplate.
c) Install the taper dowel pins in the four pedestal corner feet. Bolt all six pedestal feet to bedplate.
d) Replace all auxiliary piping, and probes, detectors, and electrical leads (bearing housings) that were removed for dismantling purposes.

6.11 Coupling reassembly

a) Mount pump half coupling hub on pump shaft, draw up coupling lock nut [7411] and accurately mark its axial position on shaft, to establish its cold position. Then remove coupling hub from shaft [2100].
b) Accurately measure and mark the axial shift on shaft, for hot position. See chart below for axial shift dimension.

COUPLING AXIAL SHIFT DIMENSIONS	
Pump type	**Shift**
3X10WXH	0.45 mm (0.018 in.)
3X11WXH	0.48 mm (0.019 in.)
4X12WXH	0.61 mm (0.024 in.)
6X14WXH	0.83 mm (0.033 in.)

c) Heat pump half coupling hub uniformly to a temperature of 90 to 105 ºC (200 to 220 ºF), by immersing in rapidly boiling water, by furnace or by heating coil.

CAUTION Do not heat in oil or do not use a torch.

d) Mount pump half coupling hub on pump shaft before it has cooled more than 5°C (10ºF), pulling up to hot position marked on shaft [2110] by tightening coupling lock nut [7411]. Tighten setscrews in coupling lock nut.
e) Install spacer coupling.
f) Check coupling/shaft alignment as described in Section 4.
g) Install coupling guard and tighten bolting.

Fill lube system oil reservoir (refer to Section 5.2.1, *Lubrication*).

Refer to Sections 5.3, *Initial start-up procedure*, and Section 5.4, *Operating checks*.

7 FAULTS; CAUSES AND REMEDIES

FAULT SYMPTOM

Failure to deliver head and/or flow at start-up or during operation	Insufficient capacity and/or pressure	Pump loses prime after starting	Excessive vibration	Noise/Cavitation	Excessive discharge pressure pulsations	Driver overloaded	Pump stops abruptly	Mechanical seal leakage	Mechanical seal overheats or excessive	Pump overloads driver	High balance drum leakoff line pressure	PROBABLE CAUSES	POSSIBLE REMEDIES
●												Pump not completely filled with liquid	For low-temperature applications allow more cooling time for pump to reach fluid temperature. (At start-up only, see Start-Up procedures in Section 5, *Commissioning, start-up, operation and shutdown*).
●			●	●	●							Actual NPSH available is lower than specified NPSH requirement.	Check suction piping configuration. Minimum recommended length of straight piping before suction flange is 5 times the diameter of the suction piping. (Refer to Section 4, *Installation*).
●			●	●	●							Air leaks in suction line when operating under vacuum	Secure all vent connections. Check flanges for leakage.
●			●	●	●							Air/vapor pocket in suction line	Bleed line through vent connections.
●	●			●								Foreign material in suction line	Dismantle suction line and clear it of all foreign material, including suction strainer and isolation valve.
●	●											Reverse direction of rotation	Correct rotation is counter-clockwise when looking from coupling end of pump. Switch any two motor leads to change rotation. If turbine, contact turbine manufacturer.
●												Driver speed too low	Check power supply for correct frequency to motor.
													Check actual speed against rated speed listed on Pump Data Sheet (Section 10.1). If necessary, contact Flowserve office or driver manufacturer (and, if included, variable speed coupling manufacturer) for maintenance instructions.
●												Flow too low, causing overheating of the fluid and loss of NPSH after a short period of satisfactory operation	Check Pump Data Sheet (Section 10.1) or performance curve and adjust the system to the rated head-flow levels.
													If necessary, increase flow by installing a bypass line to a supply tank. Do not bypass directly to suction line.
													Increase NPSH available or reduce NPSH required.
●	●									●		Flow too high	Check Pump Data Sheet (Section 10.1) or performance curve and adjust the system to the rated head-flow levels
													Reduce flow
	●											Suction pressure less than required or speed too low	Open suction valve wide. Check power supply to motor for correct voltage.
●												Excessive recirculation from discharge to inlet	Check flow through bypass line. Adjust valves if necessary.

FAULT SYMPTOM

Failure to deliver head and/or flow at start-up or during operation	Insufficient capacity and/or pressure	Pump loses prime after starting	Excessive vibration	Noise/Cavitation	Excessive discharge pressure pulsations	Driver overloaded	Pump stops abruptly	Mechanical seal leakage	Mechanical seal overheats or excessive	Pump overloads driver	High balance drum leakoff line pressure	PROBABLE CAUSES	POSSIBLE REMEDIES
●						●						Viscosity and/or specific gravity of liquid higher than rated value	Check actual viscosity and/or specific gravity against the rated values listed on the Pump Data Sheet (Section 10.1). Adjust system if necessary.
●												Material buildup and/or clogged passageways and/or corrosion on surfaces adjacent to the impeller	Clear areas near impeller of all foreign material. Restore surfaces to smooth finish using emery cloth. Replace parts that cannot be restored (either due to severe corrosion or mechanical damage).
	●											Incorrect direction of rotation	Reconnect motor leads. If turbine-contact turbine manufacturer.
	●	●										Excessive amount of air or vapors in the fluid	Check suction system for air leakage and correct. Vent air. Tighten flange bolts.
	●	●										Foreign material in impeller(s)	Dismantle pump and remove any foreign material
	●	●										Foreign material in suction line	Dismantle suction line and remove foreign material
	●											Excessive high flow operation	Reduce flow.
		●										Insufficient water supply	Ensure that suction valve is wide open. Check for proper liquid level.
		●										Suction pipe clogged	Remove foreign material.
				●		●				●		Driver speed too high	Check power supply for correct frequency to motor. If turbine-check steam pressure to turbine. If necessary, contact Flowserve office or driver manufacturer (and, if included, variable speed coupling manufacturer) for maintenance instructions.
				●								Incorrect suction piping configuration creating undesirable flow patterns	Check suction piping configuration. Minimum recommended length of straight piping before suction flange is 5 times the diameter of the suction piping. (Refer to Section 4, *Installation*).
			●	●	●							Flow rate below recommended Minimum Continuous Stable Flow (MCSF)	Check Pump Data Sheet for recommended MCSF and adjust the system conditions to the rated head-flow levels. If necessary, increase pump discharge flow by installing a bypass line from discharge to a supply tank. Do not bypass directly to the suction line.
							●					Electrical failure in motor	Check power supply for correct frequency to motor. If necessary, contact Flowserve office or driver manufacturer (and, if included, variable speed coupling manufacturer) for maintenance instructions.
									●			Insufficient cooling water seal	Obstruction in seal water piping. Remove and clean.

FAULT SYMPTOM

Failure to deliver head and/or flow at start-up or during operation	Insufficient capacity and/or pressure	Pump loses prime after starting	Excessive vibration	Noise/Cavitation	Excessive discharge pressure pulsations	Driver overloaded	Pump stops abruptly	Mechanical seal leakage	Mechanical seal overheats or excessive	Pump overloads driver	High balance drum leakoff line pressure	PROBABLE CAUSES	POSSIBLE REMEDIES
									●		●	Worn balance drum	Dismantle and replace
										●		Pump bearings seize or rotating element binds	Dismantle pump and replace part or parts causing seizure or binding
●												Impeller damage	Remove and replace impeller.
●												Impeller or diffuser throat clogged with foreign material	Clear impeller or diffuser throat of all foreign material.
●												Impeller key sheared or missing from assembly	Disassemble and check impeller key. Remove and replace if damaged.
	●											Mechanical defects: wearing ring worn. Impeller damaged sheared impeller key	Dismantle pump and correct
		●										Broken or damaged coupling	Inspect and replace same.
						●	●					Rotor binds	Dismantle pump; inspect for mechanical damage; remove any foreign material from impeller/diffusor area. Restore surfaces to smooth condition. Use emery cloth.) Replace any damaged or severely corroded parts. Ensure that the rotor turns freely. Examine areas where rotating contact may occur, such as the impeller.
		●										Impeller unbalanced	Clear impeller. If problem persists, remove and rebalance.
		●				●						Driver shaft bent	Inspect the driver shaft as described in Section 6.7, *Inspection and renewal of parts*. If necessary, contact FLOWSERVE office or driver manufacturer for maintenance instructions.
						●						Mechanical/cavitation damage to the diffuser throat area causing excessive flow rates	Inspect diffuser throat area; cutwater must be radiused. Replace diffuser if the diffuser throat edge cannot be restored to original condition.
								●				Seal setting lost or incorrect	Refer to seal drawing or contact FLOWSERVE office for proper seal setting instructions.
								●				Worn or damaged seal	Disassemble seal and inspect for wear or damage. Check for the following: -Solid particles/dirt in seal -Rough, sticky, or irregular spring action of the seal faces. -Non-uniform wear patterns or cracks on seal faces. -Worn or damaged O-rings / gaskets.
								●				O-ring/gasket missing. Damaged, and/or incorrectly seated	Remove gland and properly install O-ring or gasket. Replace if damaged. Check chemical and temperature limits of the material.
								●				Gland studs incorrectly tightened, or gland not properly seated	Check studs for damage and tighten to proper torque value.
											●	Restriction in balancing line	Remove restriction.

8 PARTS LIST AND DRAWINGS

8.1 Sectional drawing

8.2 General arrangement drawing

8.3 Piping and installation data

8.4 Mechanical seal drawing

8.5 Coupling drawing

8.6 Motor drawing

DRAWING NO.	REV.
3X10WXH500XE63	1

REVISIONS

REV.	DESCRIPTION	ECO No	DATE	REF. ZONE	REV D	CHKD	APPVL
0	INITIAL USSUE	–	10.9.04	–	J.I.C.	M.H.	L.Q.
1	INCLUDED CUSTOMER COMMENTS	–	25.10.04	–	J.I.C.	M.M.	L.Q.

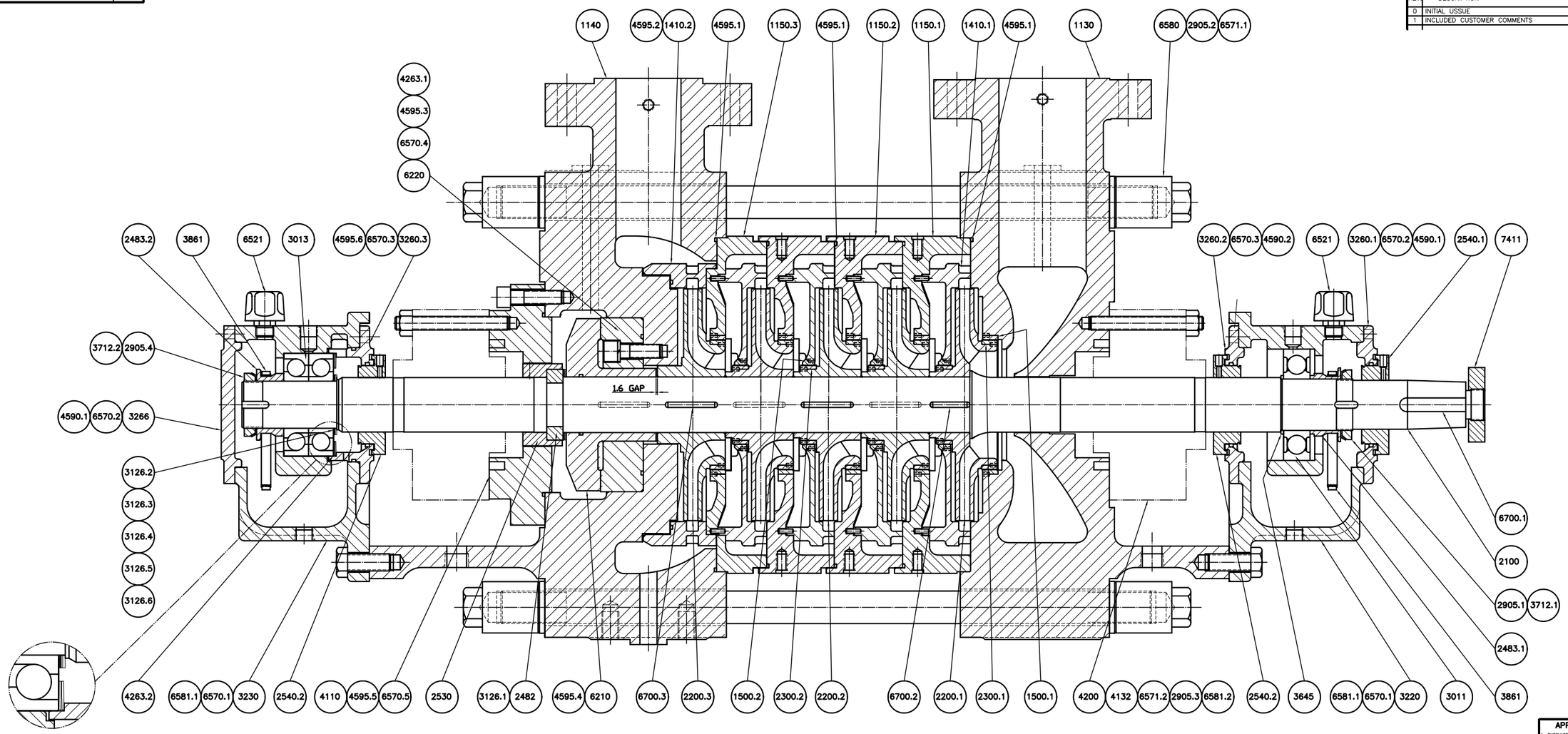

VIEW SHOWING PROPER INSTALLATION OF F/N 4263.2 (SCHNOOR SPRINGS)

APPROVAL NOTE TO CUSTOMER

1.–PURCHASER'S COMMENTS AND/OR CORRECTIONS, WITHIN THE SCOPE OF CONTRACT WILL BE MADE ON THE FIRST COMPLETED CERTIFIED DRAWING SUBMITTED BY FLOWSERVE CORPORATION AND RETURNED

2.–CORRECTIONS, ALTERATIONS, ADDITIONS AND MODIFICATIONS OUTSIDE SCOPE OF CONTRACT OR MADE AFTER FIRST SUBMITTAL MAY REQUIRE AN ADDITIONAL ENGINEERING SERVICE CHARGE.

3.–ITEMS CONDITIONALLY APPROVED OR WITH DEFERRED APPROVAL BY PURCHASER MUST BE SPECIFICALLY STATED OTHERWISE DELIVERY MAY BE EFFECTED.

PROPRIETARY NOTE

P.O. NUMBER:	LOI A–4526/AT/at
END USER:	PPC
JOB:	Lavrion V
PLANT:	Lavrion V CCPP
UNIT:	V
SERVICE:	IP BOILER FEED WATER ⚠
ITEM:	5 LAC 10/20 AP001
SERIAL No.:	M–149477 / M–149478

CUSTOMER INFORMATION

FLOW:	106 m3/h
HEAD:	⚠ 415 m
BHP:	148 Kw
EFFICIENCY:	⚠ 74,5%
RPM:	2985
FLUID:	B.F.W.
TEMPERATURE:	147,4 °C
S.G.:	0,919

OPERATING CONDITIONS

1st Angle Projection

STATUS OF APPROVAL	
ORDER No.	
DRAWN BY J.I.CABALLO	DATE 10.9.04
CHECKED BY M.HDEZ.	DATE 10.9.04
APPROVED BY L.QUIROS	DATE 10.9.04

FLOWSERVE Pump Division Coslada Operations

DWG TITLE **SECTIONAL DRAWING**

PUMP TYPE 3X10WXH–5

SIZE	DRAWING NO.	REV.
A1	3X10WXH500XE63	1
	FILE CAD.: W102334	
SCALE	UNITS	SHEET NO. n/p

PUBLIC POWER CORPORATION — LAVRION V CC PP — DMKT 11 21 302

REV	DATE	PREP.	REVISED	APPRVD	ISSUED FOR
1	25.10.04	J.I.C.	M.M.	L.Q.	INCLUDED CUSTOMER COMMENTS
0	10.9.04	J.I.C.	M.H.	L.Q.	INITIAL ISSUE

METKA — **Sectional Drawing**

3X10WXH–5 (5LAC 10/20 AP001)

FLOWSERVE

METKA DWG.No.	DIN A1
KKS DWG.No. 5-LAC-MDP-FPD-524	SCALE "–"
EA DWG.No.	SHEET 1 OF 1

Contains information for the design of structures, systems and components..... YES ■ NO ■

VERIFICATION: N/A ■ JUD/SUR ■ VERIFIER INT ■ NO ■

DOCUMENT PREPARED WITH CAD DO NOT MODIFY MANUALLY

PROPRIETARY INFORMATION

EUROPUMP CODE	QTY.	EUROPUMP DESCRIPTION	MATERIAL
3645	1	DISC SPACER	F–1140 UNE 36011
3266	1	BEARING END COVER	ASTM A216 GR.WCB
3260.3	1	BEARING COVER	F–1140 UNE 36011
3260.2	1	BEARING COVER	F–1140 UNE 36011
3260.1	1	BEARING COVER	F–1140 UNE 36011
3230	1	THRUST BEARING HOUSING	ASTM A216 GR.WCB
3220	1	BEARING HOUSING PEDESTAL SUPPORTED	ASTM A216 GR.WCB
3126.2–6	1SET	SHIM–BALL BEARING	AISI–304
3126.1	1SET	SHIM – BALANCE DISC	AISI–304
3013	2	THRUST BALL BEARING	STEEL
3011	1	RADIAL BALL BEARING	STEEL
2905.4	1	WASHER	F–1120 UNE 36011
2905.3	8	WASHER	AISI–316
2905.2	24	WASHER	C–1141
2905.1	1	WASHER	F–1120 UNE 36011
2540.2	2	FLINGER	ASTM B505 C93200
2540.1	1	FLINGER	ASTM B505 C93200
2530	1	RETAINING RING	ASTM A582 T.416
2483.2	1	LOCATING SLEEVE	F–1140 UNE 36011
2483.1	1	LOCATING SLEEVE	F–1140 UNE 36011
2482	1	RETAINING RING SLEEVE	ASTM A582 T.416
2300.2	4	IMPELLER WEAR RING	AISI–420 (LASER HARDENED)
2300.1	5	IMPELLER WEAR RING	AISI–420 (LASER HARDENED)
2200.3	1	IMPELLER LAST STAGE	ASTM A487 CA6NM
2200.2	3	IMPELLER 2ND. TO 4TH. STAGE	ASTM A487 CA6NM
2200.1	1	IMPELLER 1ST. STAGE	ASTM A487 CA6NM
2100	1	SHAFT	ASTM A276 T.410 COND.T
1500.2	4	CASING WEAR RING	ASTM A582 T.416
1500.1	5	CASING WEAR RING	ASTM A582 T.416
1410.2	1	DIFFUSER LAST STAGE	ASTM A487 CA6NM
1410.1	4	DIFFUSER 1ST. TO 4TH. STAGE	ASTM A487 CA6NM
1150.3	1	STAGE CASING LAST	ASTM A487 CA6NM
1150.2	2	STAGE CASING 2ND. & 3RD. STAGE	ASTM A487 CA6NM
1150.1	1	STAGE CASING 1ST. STAGE	ASTM A487 CA6NM
1140	1	DISCHARGE CASING	ASTM A217 WC6
1130	1	SUCTION CASING	ASTM A217 WC6

EUROPUMP CODE	QTY.	EUROPUMP DESCRIPTION	MATERIAL
7411	1	COUPLING LOCK NUT	F–1140 UNE 36011
6700.3	5	KEY	AISI–410
6700.2	1	KEY	AISI–410
6700.1	1	KEY	AISI–410
6581.2	8	HEXAGON NUT	AISI–316
6581.1	4	HEXAGON NUT	F–1120 UNE 36011
6580	24	NUT	ASTM A194 GR.2H
6571.2	8	TIE BOLT	AISI–316
6571.1	12	TIE BOLT	ASTM A193 GR.B7
6570.5	12	SCREW	AISI–410
6570.4	8	SCREW	AISI–410
6570.3	8	SCREW	ASTM A193 GR.B7
6570.2	8	SCREW	ASTM A193 GR.B7
6570.1	8	SCREW	ASTM A193 GR.B7
6551	2	COOLING COOL	AISI–316
6521	2	VENT PLUG	CARBON STEEL
6220	1	COUNTER BALANCE DISC	ASTM A582 T.416
6210	1	BALANCE DISC	ASTM A582 T.416
4595.6	1	JOINT RING CIRCULAR	BUNA–N
4595.5	1	JOINT RING CIRCULAR	ETYLEN PROPIL.
4595.4	1	JOINT RING CIRCULAR	ETYLEN PROPIL.
4595.3	1	JOINT RING CIRCULAR	ETYLEN PROPIL.
4595.2	1	JOINT RING CIRCULAR	ETYLEN PROPIL.
4595.1	5	JOINT RING CIRCULAR	ETYLEN PROPIL.
4590.2	1	GASKET	KLINGERSIL C4400
4590.1	2	GASKET	KLINGERSIL C4400
4263.2	2	SPRING PLATE	SPRING STEEL
4263.1	8	SPRING PLATE	AISI–316
4200	2	MECHANICAL SEAL	–
4132	2	STUFFING BOX NECK BUSH	–
4110	1	STUFFING BOX HOUSING	ASTM A217 WC6
3861	2	OIL RING	ASTM B505 C93200
3855	2	CONSTANT LEVEL OILER	–
3712.2	1	BEARING NUT	F–1120 UNE 36011
3712.1	1	BEARING NUT	F–1120 UNE 36011

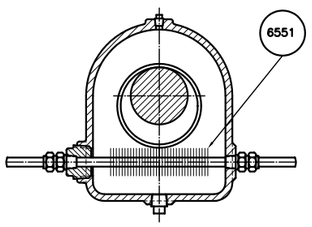

COOLER DETAIL ASSEMBLY

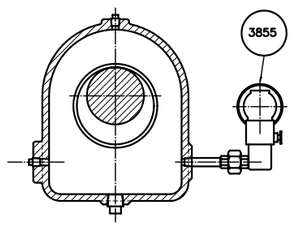

TRICO OILER DETAIL ASSEMBLY

READ INSTRUCTION MANUAL BEFORE ATTEMPTING TO DISASSEMBLE, ASSEMBLE OR OPERATE PUMP.

DRAWING NO.	REV.
3X10WXH86XE64	2

REVISIONS

REV.	DESCRIPTION	ECO No	DATE	REF. ZONE	REV'D	CHK'D	APPV'L
0	INITIAL ISSUE	–	2.7.04	–	J.I.C.	M.M.	L.Q.
1	REVISED & INCLUDED CUSTOMER COMMENTS	–	16.9.04	–	J.I.C.	M.M.	L.Q.
2	INCLUDED CUSTOMER COMMENTS	–	25.10.04	–	J.I.C.	M.M.	L.Q.

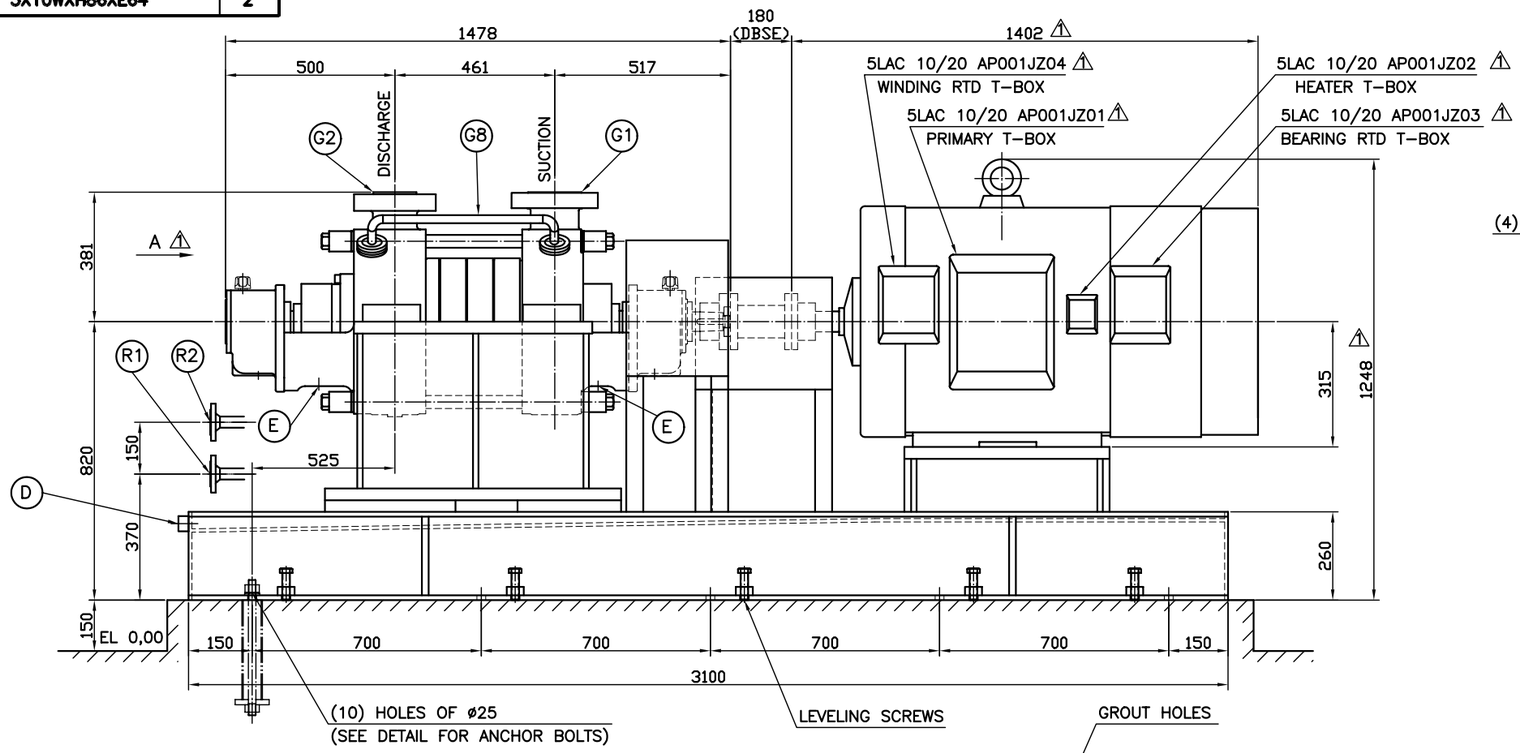

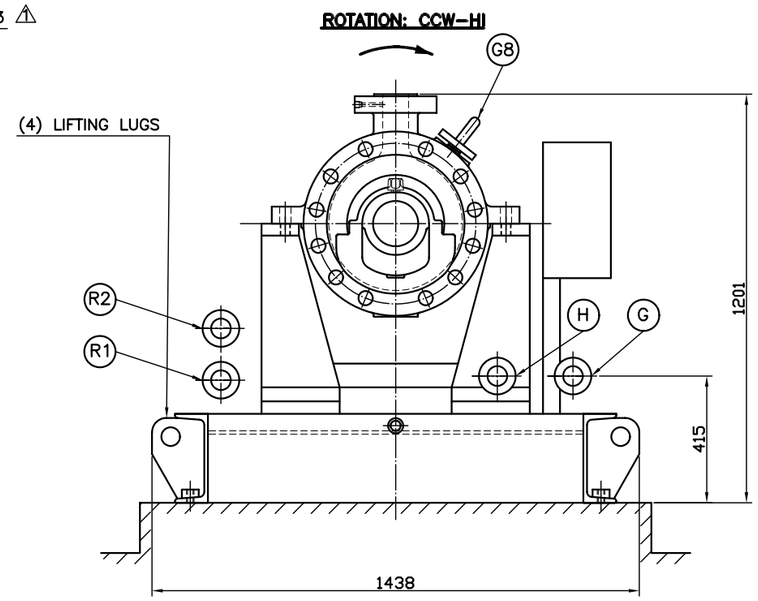

VIEW FROM-A ⚠1

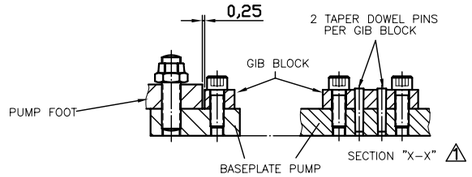

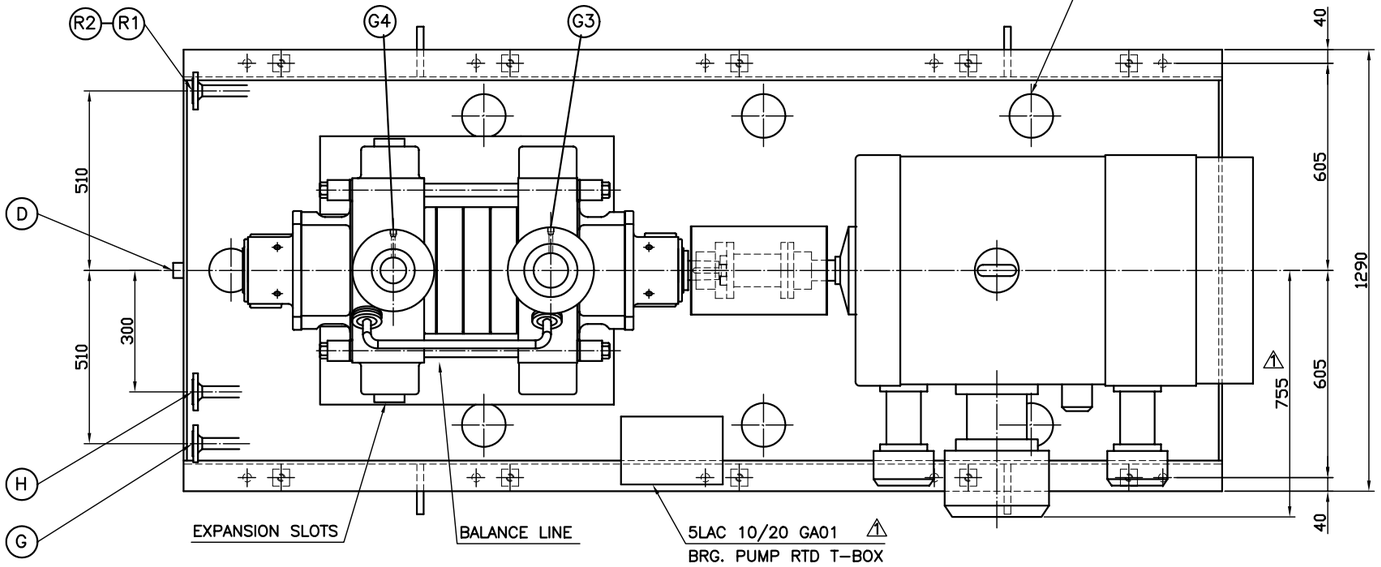

GIB BLOCK SKETCH FOR FIELD INSTALLATION

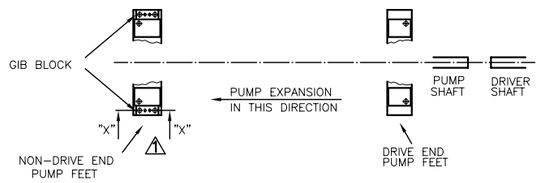

REF. DOCUMENT: LN-3X10WXH86XE64

APPROVAL NOTE TO CUSTOMER

1.–PURCHASER'S COMMENTS AND/OR CORRECTIONS, WITHIN THE SCOPE OF CONTRACT WILL BE MADE ON THE FIRST COMPLETED CERTIFIED DRAWING SUBMITTED BY FLOWSERVE CORPORATION AND RETURNED.

2.–CORRECTIONS, ALTERATIONS, ADDITIONS AND MODIFICATIONS OUTSIDE SCOPE OF CONTRACT OR MADE AFTER FIRST SUBMITTAL MAY REQUIRE AN ADDITIONAL ENGINEERING SERVICE CHARGE.

3.–ITEMS CONDITIONALLY APPROVED OR WITH DEFERRED APPROVAL BY PURCHASER, MUST BE SPECIFICALLY STATED OTHERWISE DELIVERY MAY BE EFFECTED.

P.O. NUMBER:	LOI A-4526/AT/at	FLOW:	106 m3/h
END USER:	PPC	HEAD: ⚠2	415 m
JOB:	Lavrion V	BHP:	148 Kw
PLANT:	Lavrion V CCPP	EFFICIENCY: ⚠2	74,5%
UNIT:	V	RPM:	2985
SERVICE:	IP BOILER FEED WATER ⚠2	FLUID:	B.F.W.
ITEM:	5 LAC 10/20 AP001	TEMPERATURE:	147,4 °C
SERIAL No.:	M-149477 / M-149478	S.G.:	0,919
CUSTOMER INFORMATION		OPERATING CONDITIONS	

1st Angle Projection

PUMP DATA	
TYPE	3X10WXH
NUMBER OF STAGES	5
ROTATION	CCW – HI
R.P.M.	3000
SUCTION NOZZLE	4" ASME B16.5 CL.300 R.F.
DISCHARGE NOZZLE	3" ASME B16.5 CL.900 R.F.

MOTOR DATA ⚠1	
SUPPLIED BY	FLOWSERVE
MANUFACTURER	TECO WESTINGHOUSE
TYPE	AEHD TK001
POWER	180 Kw
SPEED	3000 R.P.M.
VOLTAGE	400 V.
ENCLOSURE	IP-55

MAXIMUM ALLOWABLE NOZZLE LOADS

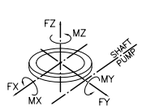

SUCTION

Fx = 1420 N Mx = 1330 Nm
Fy = 1160 N My = 680 Nm
Fz = 1780 N Mz = 1000 Nm
FR = 2560 N MR = 1800 Nm

DISCHARGE

Fx = 1070 N Mx = 950 Nm
Fy = 890 N My = 470 Nm
Fz = 1330 N Mz = 720 Nm
FR = 1930 N MR = 1280 Nm

NOZZLE DIMENSIONS

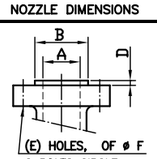

	SUCTION (G1) 4"-ANSI,Cl300 R.F.	DISCHARGE (G2) 3"-ANSI,Cl900 R.F.
A	102	76
B	157	127
C	200	190.5
D	1.6	6
E	8	8
F	22.2	25.4

ANCHOR BOLT DETAIL

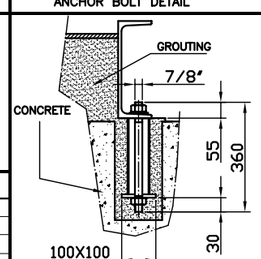

ANCHOR BOLT RECOMMENDED MATERIAL: CARBON STEEL (ASTM A307 Gr.B)

APPROXIMATE WEIGHTS ⚠1

PUMP	1270 Kg.
MOTOR	980 Kg.
ACCESORIES	2050 Kg.
TOTAL	4300 Kg.

TOLERANCES

NOZZLES AND CONNECTIONS
LINEAL: ±6
ANGULAR: ±1° IN ANY DIRECTION
OTHER DIMENSIONS : ±1%
DIMENSIONS ARE IN MILLIMETERS

AUXILIARY CONNECTIONS

D	BASEPLATE DRAIN	1.00" NPT
E	BEARING BRACKET DRAIN	0.75" NPT.
G	DISCHARGE HEAD DRAIN	0.75"-ANSI,900#R.F.
H	WARMING	0.75"-ANSI,900#R.F.
G8	BALANCE LINE	0.75"-ANSI,600#R.F.
R1	COOLING WATER INLET	1.00"-ANSI,150#R.F.
R2	COOLING WATER OUTLET	1.00"-ANSI,150#R.F.
G3	SUCTION MANOMETER	0.50" NPT
G4	DISCHARGE MANOMETER	0.50" NPT

STATUS OF APPROVAL	
ORDER No.	
DRAWN BY J.I.CABALLO	DATE 2.7.04
CHECKED BY M.MERONO	DATE 2.7.04
APPROVED BY L.QUIROS	DATE 2.7.04

FLOWSERVE Pump Division Coslada Operations

DWG TITLE **GENERAL ARRANGEMENT**
PUMP TYPE 3X10WXH-5

SIZE	DRAWING NO.	REV.
A2	3X10WXH86XE64	2
	FILE CAD.: X102145	
SCALE	UNITS	SHEET NO. n/p

REV	DATE	PREP	REVISED	APPRV'D	ISSUED FOR
2	25.10.04	J.I.C.	M.M.	L.Q.	INCLUDED CUSTOMER COMMENTS
1	16.9.04	J.I.C.	M.M.	L.Q.	REVISED & INCLUDED CUSTOMER COMMENTS
0	2.7.04	J.I.C.	M.M.	L.Q.	INITIAL ISSUE

Contains information for the design of structures, systems and components..... YES ☐ NO ☒
VERIFICATION: N/A ☐ JUD/SUP ☐ VERIFIER N/I ☐ NI ☒
DOCUMENT PREPARED WITH CAD DO NOT MODIFY MANUALLY

PUBLIC POWER CORPORATION — LAVRION V CC PP — DMKT 11 21 302

METKA — **General Arrangement Drawing**
3X10WXH-5 (5LAC 10/20 AP001)

FLOWSERVE

METKA DWG.No.	DIN A2
KKS DWG.No. 5-LAC-MDA-FPD-501	SCALE "-"
EA DWG.No.	SHEET 1 OF 1

Project:
LAVRION V-CCPP DMKT 11 21 302

Title: P& ID
(MP BoilerFeed Water Pumps 5 LAC10/20 AP001)

Supplier Document No:	-	Issue: 1
KKS Document No:	5-LAC-MDD-FPD-506	
Purpose of issue: For Revision		Date: 28/10/04

00-Y-X-10302-F3/I Issue 1

Prepared: NO

Reviewed: MAP

Approved: MM

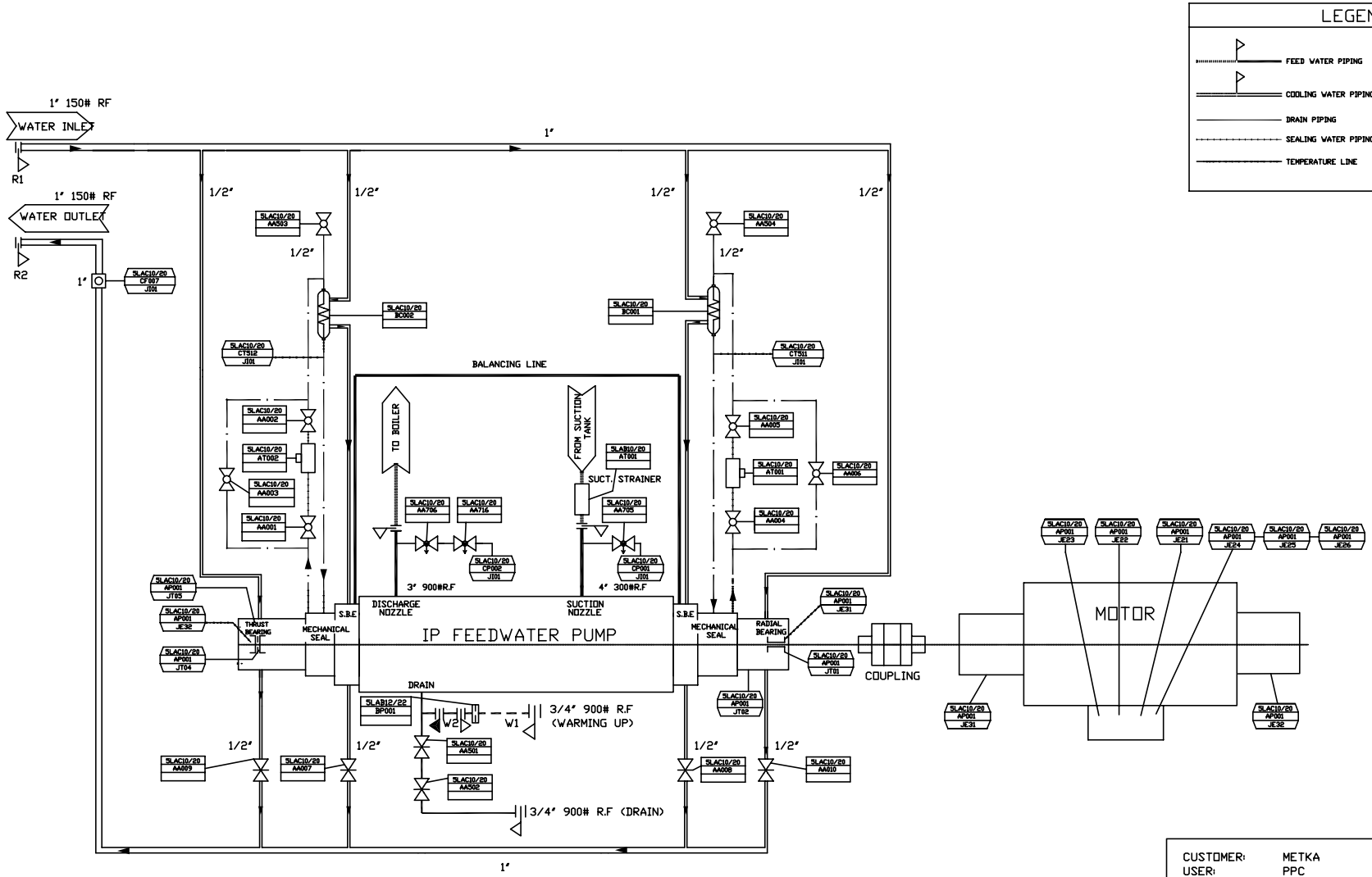

LEGEND

- FEED WATER PIPING
- COOLING WATER PIPING
- DRAIN PIPING
- SEALING WATER PIPING
- TEMPERATURE LINE
- SUPPLIED BY OTHERS
- SUPPLIED BY FLOWSERVE
- INSTRUMENT
- VALVE/COMPONENT

CUSTOMER:	METKA
USER:	PPC
PROJECT:	LAVRION V
FLOWSERVE REF	10.06.50.10895
PUMP:	3X10WXH-5
SERVICE:	M.P. BOILER FEED WATER PUMPS
TAG Nº:	5LAC10/20 AP001

DESCRIPTIONS:

1.- FUNCTION SYMBOL:

(I) LOCAL INDICATION
I REMOTE INDICATION

AA — VALVE
AT — MAGNETIC SEPARATOR
BC — HEAT EXCHANGER
CF — FLOW INDICATOR
CP — PRESSURE INDICATOR
CT — THERMO ELEMENT/INDICATOR
CV — VIBRATION TRANSMITTER

REV.	MODIFICATION	DATE	DRW.	CHK.	APPR.
B	CHANGING TAGS	18.10.04	N.O	M.A.P	M.M.
A	GENERAL ISSUE	02.08.04	N.O	M.A.P	M.M.
0	FIRST ISSUE	01.04.04	N.O	M.A.P	M.M.

CAD DRAWING - MANUAL MODIFICATIONS ARE NOT ALLOWED -

FLOWSERVE

PUMP DIVISION
COSLADA PLANT
MADRID

DERIVED FROM : -
CERTIFIED FOR :

DRAWN : N.O.Z	DATE : 31.03.04	TITLE : PIPING & INSTRUMENTATION DIAGRAM	
CHECKED : M.A.P	DATE : 31.03.04		
APPROVED : M.M.	DATE : 31.03.04	CAD.REF. X102165	DRAWING N. 3X10WXH823XE56 B
SCALE :	WEIGHT :		

FICHERO.DWG

FORMATO ORIGINAL A3 (420 x 297)

15Ø MM

NO: 949408 REV: A

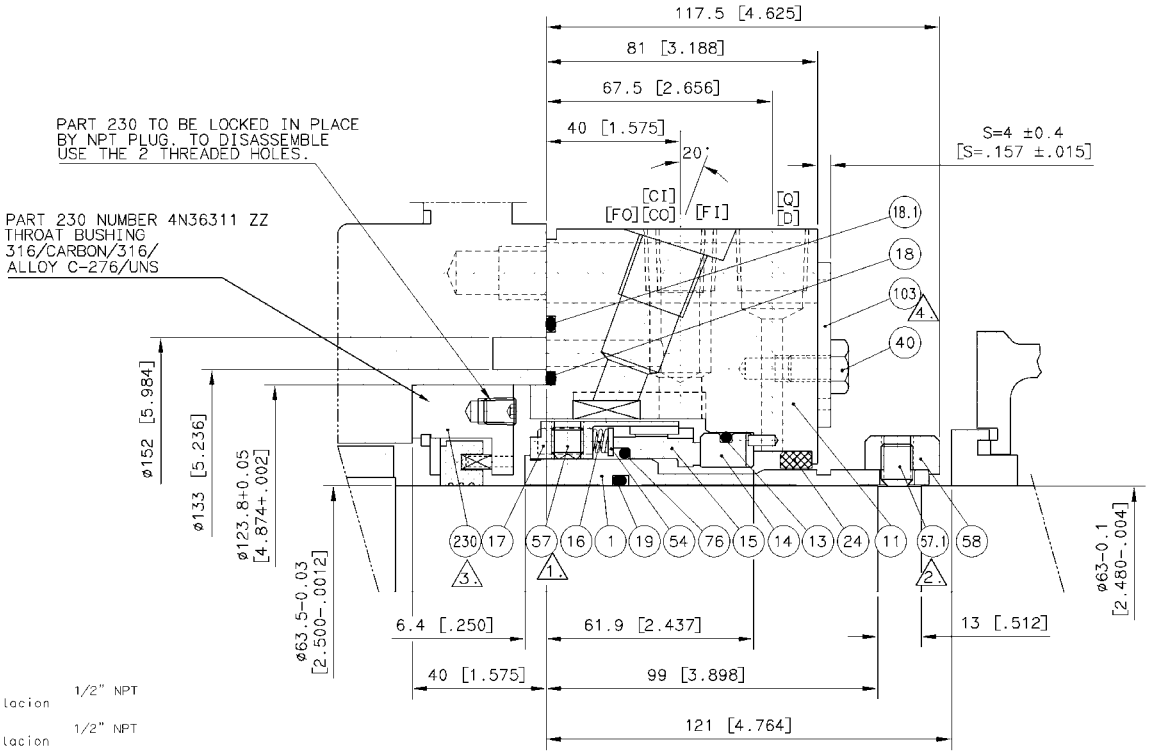

[FI]	FLUSH IN entrada circulacion	1/2" NPT
[FO]	FLUSH OUT salida ciurculacion	1/2" NPT
[Q]	QUENCH qnench	1/2" NPT
[D]	DRAIN drenaje	1/2" NPT
[CI]	COOLING IN entrada refrigeracion	1/4" NPT
[CO]	COOLING OUT salida refrigeracion	1/4" NPT

FREE END
(SEE 949408 SHEET 1 OF 2 FOR DRIVE END)

BILL OF MATERIAL NO: 949408-002 — *SUGGESTED SPARE PARTS

ITEM	PART NUMBER	CODE	QTY	DESCRIPTION	MATERIAL	*	MCSO
1	2N38265	DB	1	SHAFT SLEEVE CAMISA DE EJE	316		
11	2N36309	DB	1	FLANGE TAPA	316		
13	568238	GU	1	GASKET JUNTA DE ASIENTO	FLUOROELASTOMER	*	
14	668845	SL	1	SEAL FACE CARA ESTACIONARIA	SILICON CARBIDE	*	
15	154793	RY	1	SEAL FACE CARA ROTATIVA	CARBON	*	
16	668859	NL	6	COIL SPRING MUELLE	ALLOY C-276	*	
17	154795	DB	1	SPRINGHOLDER RETENEDOR	316		
18	568250	GU	1	GASKET JUNTA TAPA	FLUOROELASTOMER	*	
18.1	568259	GU	1	GASKET JUNTA TAPA	FLUOROELASTOMER	*	
19	568230	GU	1	GASKET JUNTA DE CAMISA	FLUOROELASTOMER	*	
24	669861	CE	1	FLANGE BUSHING CASQUILLO TAPA	CARBON		
40	4N02099	DB	3	CAP SCREW TORNILLOS ALLEN	316		
54	668860	DB	1	RETAINING RING ANILLO RETENCION	316		
57	4R0437	DB	3	SET SCREW TORNILLO DE FIJACION	316	*	
57.1	4R0438	CI	6	SET SCREW TORNILLO DE FIJACION	ALLOY STEEL	*	
58	666922	DB	1	DRIVE COLLAR COLLAR DE ARRASTRE	316		
76	568235	GU	1	GASKET JUNTA CARA ROTATIVA	FLUOROELASTOMER	*	
103	4R15130	DB	3	SETTING PLATE ANILLO DE AJUSTE	316		

1. TIGHTEN SETSCREWS EQUALLY, IN 4 STEPS.
FINAL TORQUE: 8.5 Nm / 75 LBF.INCH. SECURE AT ASSEMBLY.
apretar los prisioneros de forma uniforme y 4 secuencias de tornillos.par final: 8.5 Nm. colocar los tornillos de asiento durante el montaje.

2. TIGHTEN SETSCREWS EQUALLY, CROSSWISE, IN 4 STEPS.
FINAL TORQUE: 33 Nm / 290 LBF.INCH.
apretar los prisioneros de forma uniforme y 4 secuencias de tornillos opuestos. par final: 33 Nm.

3. TIGHTEN NPT PLUG, FINAL TORQUE: 15 Nm / 130 LBF.INCH.

4. DISENGAGE SETTING PLATES BEFORE START-UP.

5. FOR INSTALLATION AND OPERATING INSTRUCTIONS SEE SEPARATE MANUAL.
para instrucciones de instalacion y operacion, ver manual adjunto.

FINAL DRAWING
RELEASE TO MANUFACTURING
NO FURTHER CHANGES SHALL BE MADE BY THE VENDOR OR THE BUYER
SIGNATURE : JPalani DATE : 10/09/2004
FLOWSERVE
Flow Solutions Division

THIRD ANGLE — END VIEW REDUCED SCALE: — ROTATION

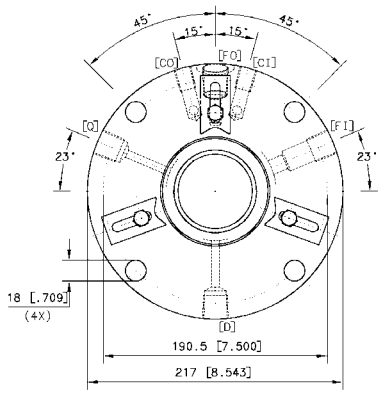

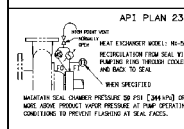

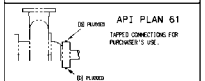

PIPING REQUIREMENTS	PIPING REQUIREMENTS
CUSTOMER: FLOWSERVE FPD COSLADA ADDRESS: COSLADA (MADRID) SPAIN ULTIMATE USER: METKA/LAVRION ADDRESS: GRECE CUSTOMER P.O.: HEL-007852 PRODUCT: BFW TEMP: 147.5°C SPEC GRAVITY: 0.9192 SEAL CHAMBER PRES: 5.9 BARG SUCT PRES: 5.9 BARG	DISCH PRES: 50 BARG RPM: 2985 API PLAN: 23/61 API CODE: BSTFN OEM PROJECT NO: 11951 EQUIP ITEM NO: EQUIP SERIAL NO: VISCOSITY: VAPOR PRES:

SEAL TYPE: QB	SEAL SIZE: 3.125
SEAL CONFIG: SINGLE INSIDE-CARTRIDGE	SIZE CODE:
MATL CODE: 5U4X	WEIGHT:
EQUIP MFR: FLOWSERVE FPD COSLADA (SPAIN)	INSTR:
EQUIP MODEL: 3X10 WKH-5 / HOR.	
EQUIP DWG: M-01209	DESIGN:

FLOWSERVE Flow Solutions Division	SCALE: TO SCALE	OPTIONS:	
	DRAWN: JPALANI	REF DWG: A2N37109	
	DATE: 26-AUG-2004	FORM DWG: A2N46718	REV:-
	CHKD: SSRINIVASAN	ASSY/ORDER NO: SHEET: 2 OF: 2	REV:
	APPVD:	F.O. NO: 949408	949408 A

REVISION: A DATE: 10-SEP-2004 BY: JPALANI CHKD: SSRINIVASAN ECN NO:
REVISION NOTE: FINALIZED

DIM'S ARE REF UNLESS SPECIFIED OTHERWISE. DIM'S IN: MM [INCHES] — D/A1 FEB 2000

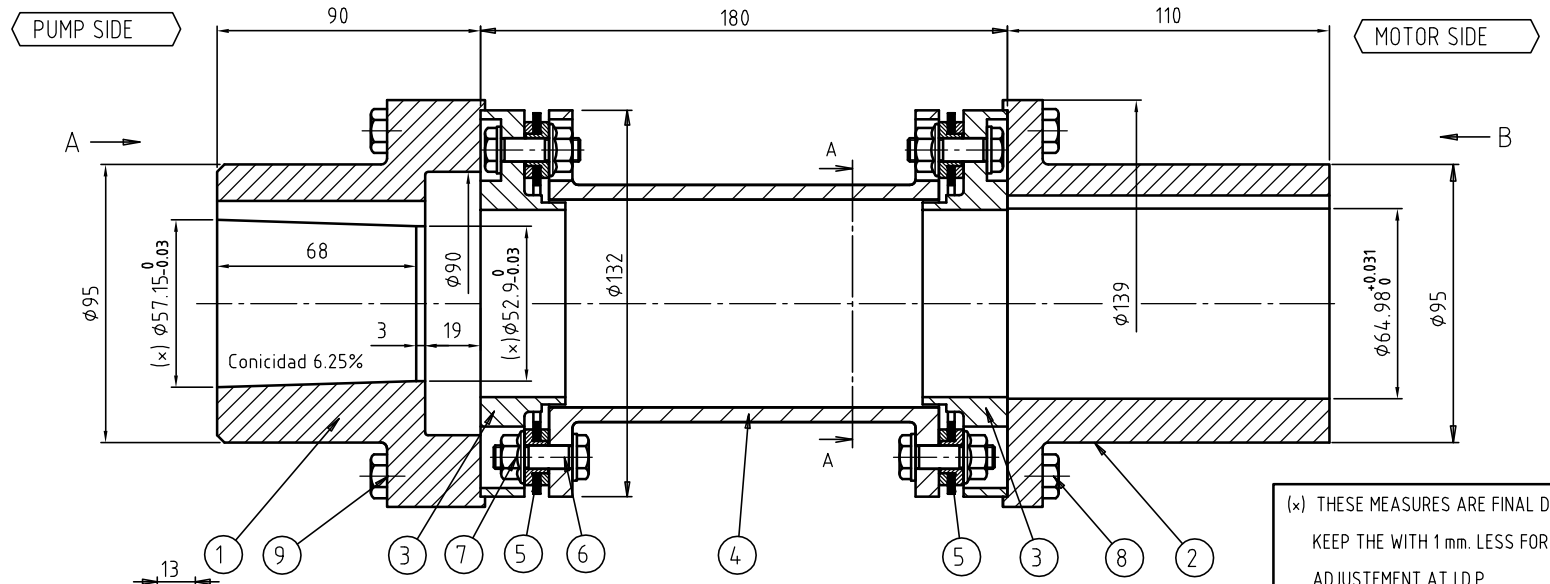

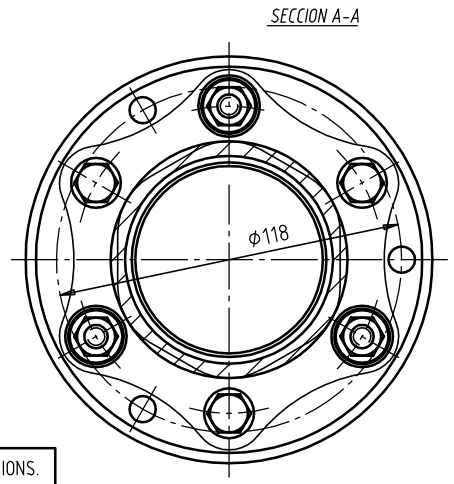

(x) THESE MEASURES ARE FINAL DIMENSIONS. KEEP THE WITH 1 mm. LESS FOR THE FINAL ADJUSTEMENT AT I.D.P.

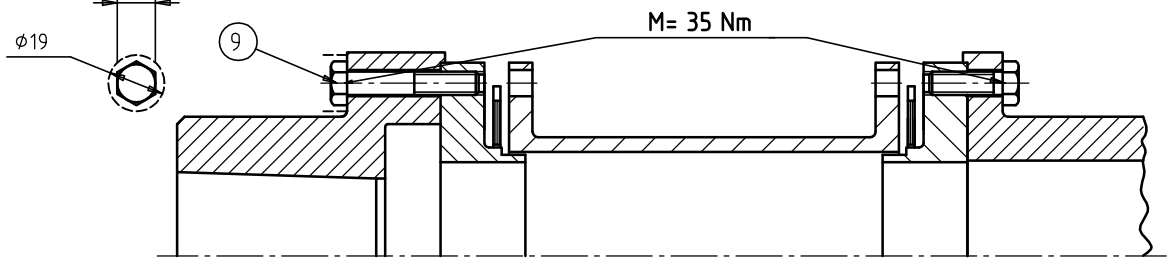

COUPLING DATA:

Nominal torque: 1100 Nm.

Peak torque: 2200 Nm.

Max. axial misalignment: ±2,6 mm.

Max. angular misalignment: ±1,5°.

Tightening torque (pos 8-9): 35 Nm.

Max. axial stiffness (for 2 disc packs): 725 N/mm.

Angular stiffness (for 1 disc pack): 27 Nm/deg.

Project: METKA-LAVRION
According to RTA 10895
DRAWING M-01151 / 42

Equilibrado dinámicamente a G 1 y 2980 rpm S/ ISO 1940-1

VISTA POR A

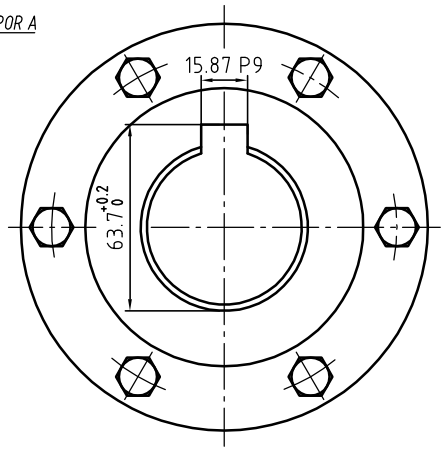

VISTA POR B

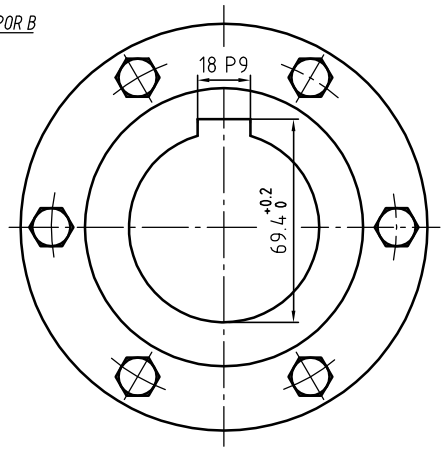

N.	DENOMINACION	Marca	Dibujo N.	Material	Modelo	Peso(Kg)
6	BOLT M8x45	9		12.9	DIN-931	
6	BOLT M8x25	8		12.9	DIN-931	
12	LOCKNUT M8	7		10	DIN-6923	
12	BOLT M8	6		10.9	JAURE	
2	DISC PACK	5			JAURE	
1	SPACER	4		St-52	JAURE	
2	DO FLANGE	3		St-52	JAURE	
1	JUMBO HUB	2		St-52	JAURE	
1	JUMBO HUB	1		St-52	JAURE	

Modificaciones	Fecha	Rev.

N° de oferta: –
N° de pedido: –

	Fecha	Nombre
Dibujado	16-09-04	OSKAR
Revisado Y Aprobado	16-09-04	INAKI

JAURE,S.A.
ZIZURKIL (GUIPUZCOA)

UNE-EN-ISO 9001
EMPRESA CERTIFICADA

Escala:	Material:	Tratamiento:	Peso(Kg):	N°de pieza:
–	–	–	–	–

N°de PLANO: 0F-14886
REV. –

Nombre de la pieza: ASSEMBLY
Nombre del conjunto: LAMIDISC DO-132-6

Sustituye a
Sustituido por –

Project:

LAVRION V-CCPP
DMKT 11 21 302

Title: Motor Drawing

(MP BoilerFeed Water Pumps 5 LAC10/20 AP001)

Supplier Document No:	-	Issue: 1
KKS Document No:	5-LAC-YLP-FPD-554	
Purpose of issue: For approval		Date: 08/09/04

00-Y-X-10302-F3/I Issue 1

Prepared: TK

Reviewed: HH

Approved: CW

EMPRESARIOS AGRUPADOS

21 OCT 2004

COMMENTS ☒ NO COMMENTS ☐

413-005-PM21200-0010-0001-B

1 172162 727602

413-005-PM21200-10B

TYPE	OUTPUT		POLE	TIME RATING	VOLTAGE V	Hz	SYN. SPEED R. P. M
	HP.	kW.					
AEHD-TK001		180	2	CONT.	400	50	3000

TOTALLY ENCLOSED FAN-COOLED TYPE. SQUIRREL-CAGE ROTOR

It is required drawings of every box, where reference must be included in this drawing

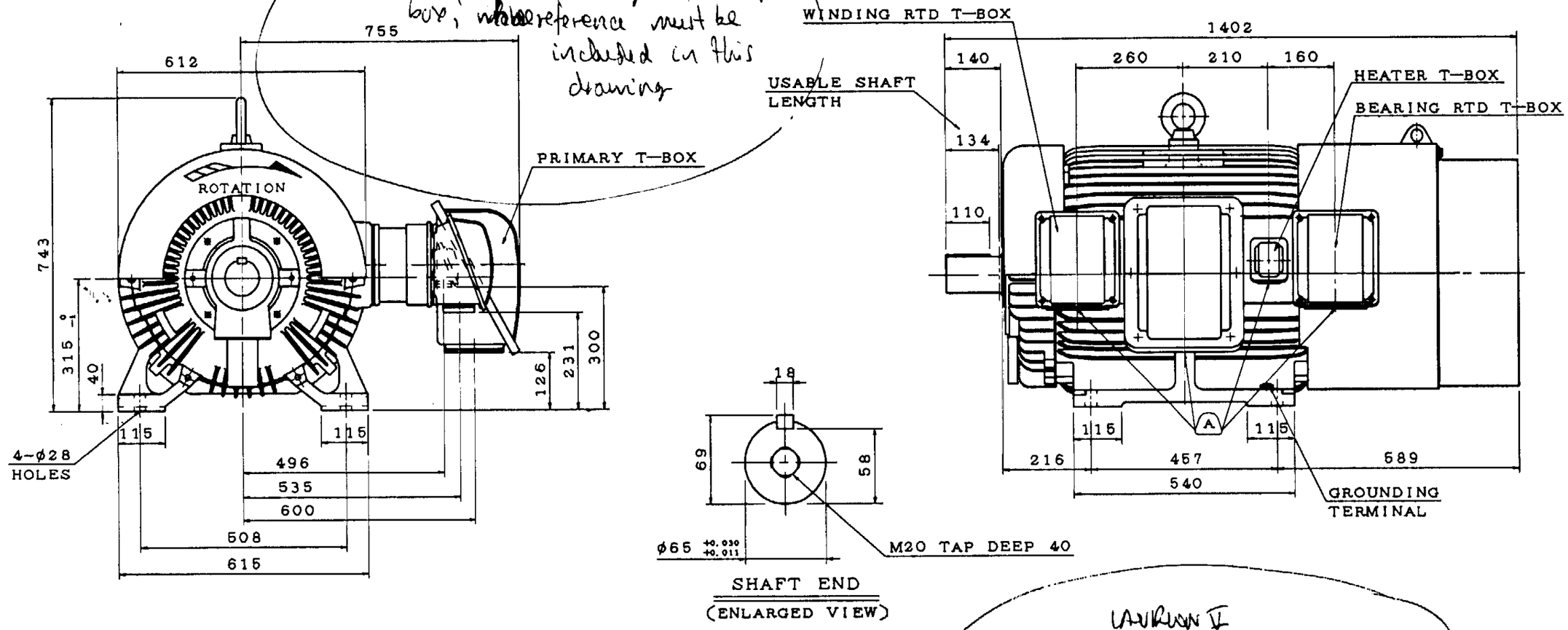

LAUREAN II
IP Boiler Feed Water Pump Motor
SLAC 10/20 APCU1

NOTE:

1. DIMENSIONS IN MM
2. FRAME NO. 315MA
3. F CLASS INSULATION
4. FOR DIRECT FLEXIBLE COUPLING
5. BEARING NO.: DRIVE END 6314C3, OPP. DRIVE END 6314C3
6. WITH SPACE HEATER: 1ϕ 400V 150W
7. WITH WINDING RTD: PT 100Ω/0°C 6PCS
8. WITH BEARING RTD: PT 100Ω/0°C 2PCS (DUAL ELEMENT)
9. NOISE: BELOW 79dBA AT 1 METER DISTANCE NO LOAD

(A) REMOVABLE COVER FOR CABLE ENTRY TO BE DRILLED BY THE CUSTOMER.

DWN.	T. KUAN	AUG·04·2004
CHKD.	H. HUANG	AUG·04·2004
APPD.	C. WANG	AUG·04·2004

DATE

OUTLING DIMENSIONS

3-PHASE INDUCTION MOTOR

TECO Westinghouse

DWG NO. 3A040Z207 REV: 00

9 CERTIFICATION

Certificates, determined from the contract requirements will be provided with the quality dossier.

10 OTHER RELEVANT DOCUMENTATION AND MANUALS

10.1 Supplementary User Instruction manuals

Supplementary instruction determined from the contract requirements for inclusion into User Instructions such as for a driver, instrumentation, controller, sub-driver, seals, sealant system, mounting component, etc. are included under this section. If further copies of these are required they should be obtained from the purchaser for retention with these User Instructions.

10.2 Change notes

If any changes, agreed with Flowserve Pump Division, are made to the product after its supply, a record of the details should be maintained with these User Instructions.

10.3 Additional sources of information

Reference 1:
NPSH for Rotordynamic Pumps: a reference guide, Europump Guide No. 1, Europump & World Pumps, Elsevier Science, United Kingdom, 1999.

Reference 2:
Pumping Manual, 9th edition, T.C. Dickenson, Elsevier Advanced Technology, United Kingdom, 1995.

Reference 3:
Pump Handbook, 2nd edition, Igor J. Karassik et al, McGraw-Hill Inc., New York, 1993.

Reference 4:
ANSI/HI 1.1-1.5
Centrifugal Pumps - Nomenclature, Definitions, Application and Operation.

Reference 5:
ANSI B31.3 - Process Piping.

FLOWSERVE
REGIONAL SALES OFFICES:

Europe, Middle East & Africa
Flowserve Limited (Pump Division)
Harley House, 94 Hare Lane
Claygate, Esher, Surrey KT10 0RB
United Kingdom

Tel +44 (0)1372 463 700
Fax +44 (0)1372 460 190

Latin America
Flowserve S.A. de C.V.
Avenida Paseo de la Reforma 30
2nd Floor, Colonia Juarez Centro
Mexico, D.F.Z.C. 06040

Tel +52 5705 5526
Fax +52 5705 1125

USA and Canada
Flowserve Corporation (Pump Division)
Millennium Center, 222 Las Colinas Blvd.
15th Floor, Irving, TX 75039-5421, USA

Tel +1 972 443 6500
Toll free 800 728 PUMP (7867)
Fax +1 972 443 6800

Asia Pacific
Flowserve Pte Ltd (Pump Division)
200 Pandan Loop, 06-03/04
Pantech 21, Singapore 128388

Tel +65 775 3003
Fax +65 779 4607

Visit our web site at: www.flowserve.com

Your Flowserve factory contact:

Flowserve Spain S.A.
Avda. Fuentemar, 26-28, Pol. Ind.
28820 COSLADA (Madrid)
Telephone: (34) 91 660 46 86
(34) 91 660 46 00
Fax Parts: (34) 91 669 35 29
Fax Service: (34) 91 669 43 54
www.flowserve.com

Your local Flowserve representative:

To find your local Flowserve representative, please use the Sales Support Locator System found at www.flowserve.com

Mechanical seal Manual

FLOWSERVE®

Flow Solutions Division

Mechanical Seal
General Installation Instructions

These installation instructions can be used for the following seal types:

Pusher seals: Q series, U series, D series, RO, CRO, P series, Europac 6 series, Europac 306, Allpac 4 series, Allpac N series, UHT series, DHT series, HSC, HSH, FRO, LD, HD series, SRO, Simpac 3 series, Centipac 1 series.

Bellows seals: BX series, CBR series, BXRH, BXH series, BXLS series, BL, BRC series, PB, PC, CBS, PBS, PBR, X series

Table of Contents

page no.

1. Drawing, Brief Description, Functional requirements

1.1 Assembly Drawing

The assembly drawing is included in the shipping box with the mechanical seal.

1.2 Brief Description

A mechanical seal is a device designed to seal a rotating shaft against a stationary housing, e.g. a pump shaft against a pump casing. The stationary components will consist of a seal ring and (depending on the design) a springloaded element. The spring-loaded element can be a spring or a bellows. The seal ring is sealed against the housing with a secondary gasket, e.g. an O-ring. The rotating components will consist of a seal ring and (depending on the design) a spring-loaded element.
The spring-loaded element can be a spring or a bellows. The seal ring is sealed against the shaft with a secondary gasket, e.g. an O-ring.

A mechanical seal can be supplied as a pre-assembled cartridge or in separate components. Assembly is done in accordance with the assembly drawing. A mechanical seal will run in the pumped product or external source fluid. To provide lubrication, a film of liquid must always be present between the seal faces. The sealing surfaces are separated from each other by the seal liquid film during shaft rotation and in principle operate without contact and thus minimal wear under these conditions.

1.3 Functional requirements

The proper functioning of a mechanical seal is only achieved once the following conditions have been met:

- The sealing surfaces are lapped within specification
- Perpendicularity and concentricity between the shaft and the seal chamber face and bore respectively

- Freedom of movement of the spring loaded components in axial direction
- Axial and radial shaft movements within Flowserve or OEM tolerances whichever is the tightest.
- The seal is operated under the conditions for which it was selected.
- The equipment in which the seal(s) is (are) installed is operated within normal parameters (no cavitation, excess vibration etc.)
- Prevention of sedimentation on shaft or sleeve surfaces caused by for instance crystallisation or polymerisation
- Permanent seal liquid film between the sealing surfaces

Failure to meet these requirements will result in excessive leakage and/or shortened seal life

2. Safety

Please read these instructions carefully. Installation in accordance with the following instructions will contribute to long and trouble free operation of the mechanical seal.
For related mechanical seal auxiliary equipment (reservoirs, coolers, etc.), separate instructions will be provided.

The ultimate user must ensure that personnel assigned to handle, install and operate the mechanical seal and related equipment is well acquainted with the design and operating requirements of such equipment.

Damage to any of the seal components and in particular the faces may cause (excessive) leakage in liquid or gas form. The degree of hazard depends on the sealed product and may have an effect on people and/or the environment. Components coming into contact with leakage must be corrosion resistant or suitably protected. Plant regulations concerning work safety, accident prevention and pollution must be strictly adhered to.

3 General

All illustrations and details in these installation and operating instructions are subject to changes that are necessary to improve product performance without prior notice.
The copyright of these instructions is the property of Flowserve. These instructions are intended for maintenance, Operating and Supervisory personnel and contain regulations and drawings of a technical character that may not, in full or in part, be copied, distributed, used without authorisation for competitive purposes, or given to others.
It should be understood that Flowserve does not accept any liability for instances of damage and/or malfunctioning incurred through non-adherence to these installation instructions.

4. Transport, Storage

The mechanical seal and related equipment must be transported and stored in the unopened, original shipping box. The warehouse in which the mechanical seals and related equipment are stored must be dry and free of dust.
Avoid exposing equipment to large temperature fluctuations and radiation.

Parts or complete mechanical seals that have been dropped or otherwise have been subjected to heavy impacts during transport must not be installed.
An inspection by Flowserve or its appointed representative is strongly advised

After a storage period of 3 years the mechanical seal must be inspected for its “as new” properties. This applies in particular to the seal faces and secondary sealing elements. An inspection by Flowserve becomes necessary.
If the equipment is to be preserved with the mechanical seal(s) installed, the preserving medium must not impair the function of the mechanical seal by e.g. fouling of the seal faces and/or attack the secondary seals.

5. Equipment Check

5.1 Follow plant safety regulations prior to equipment disassembly:
- 5.1.1 Wear designated personal safety equipment
- 5.1.2 Isolate equipment and relieve any pressure in the system
- 5.1.3 Lock out equipment driver and valves
- 5.1.4 Consult plant Material Safety Data Sheet (MSDS) files for hazardous material regulations

5.2 Disassemble equipment in accordance with the equipment manufacturer's instructions to allow access to seal installation area.

5.3 Remove existing sealing arrangement (mechanical seal or otherwise). Clean seal chamber and shaft thoroughly.

5.4 Verify the shaft dimensions as shown on the seal assembly drawing. Inspect surfaces under gaskets to ensure they are free from pits or scratches.

5.5 Verify the seal chamber bore or OD pilot fit as shown on the seal assembly drawing.

5.6 Check seal assembly drawings for any modifications (reworks) to be made to the equipment for mechanical seal installation and act accordingly.

Shaft runout should not exceed 0,05 mm (.002") TIR (Total Indicator Reading) at any point along the shaft for ball or roller type bearings. For sleeve type bearings, refer to manufacturer instructions.
If the equipment is not completely dismantled, verify runout near seal location.

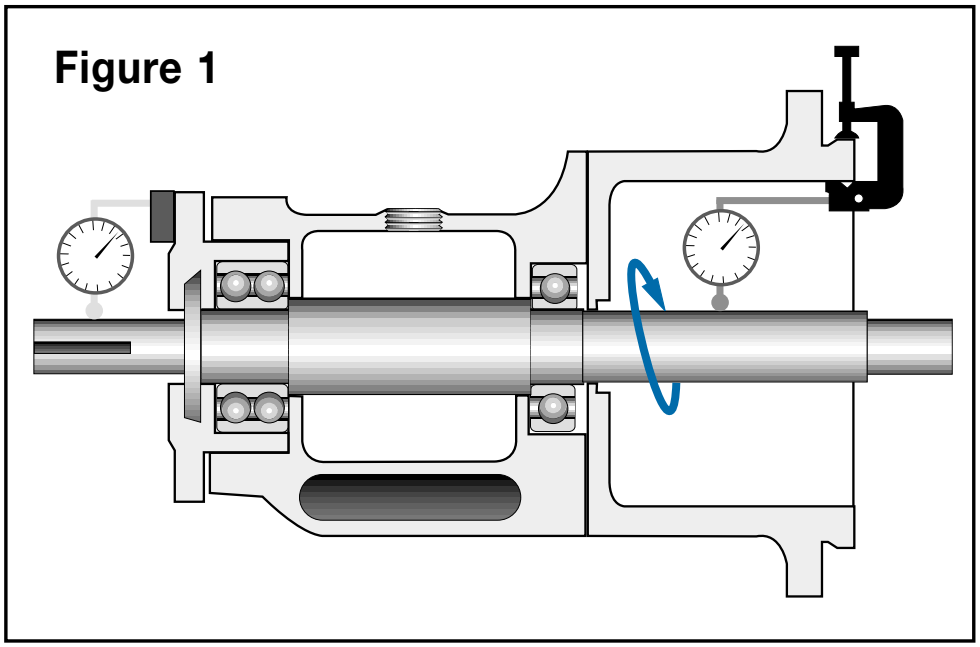

The above values apply to shaft speeds in the

range from 1000 to 3600 RPM. For values above and below, consult your Flowserve representative. See figure 1.

Shaft endplay should not exceed 0,10 mm (.004”) TIR on ball type thrust bearings. For pad type thrust bearings, refer to manufacturer's instructions. See figure 2.

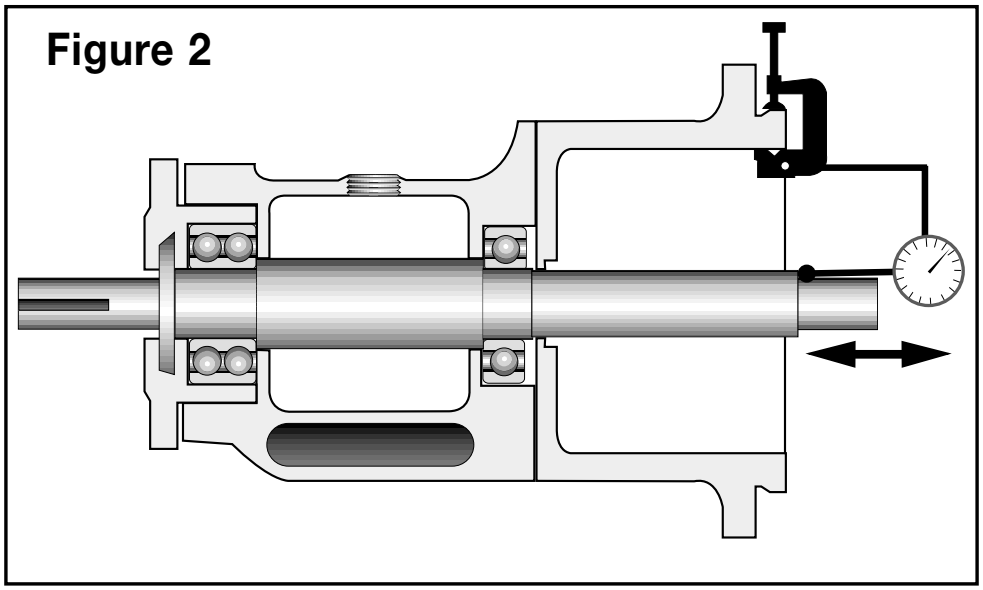

Radial shaft movement should be checked against the equipment manufacturer's specifications. Generally 0,05 - 0,10 mm (.002 - .004”) will be applicable for ball or roller type bearings. For sleeve or journal type bearings, values will generally be in the order of 0,10 - 0,15 mm (.004” - 0.006”). See figure 3.

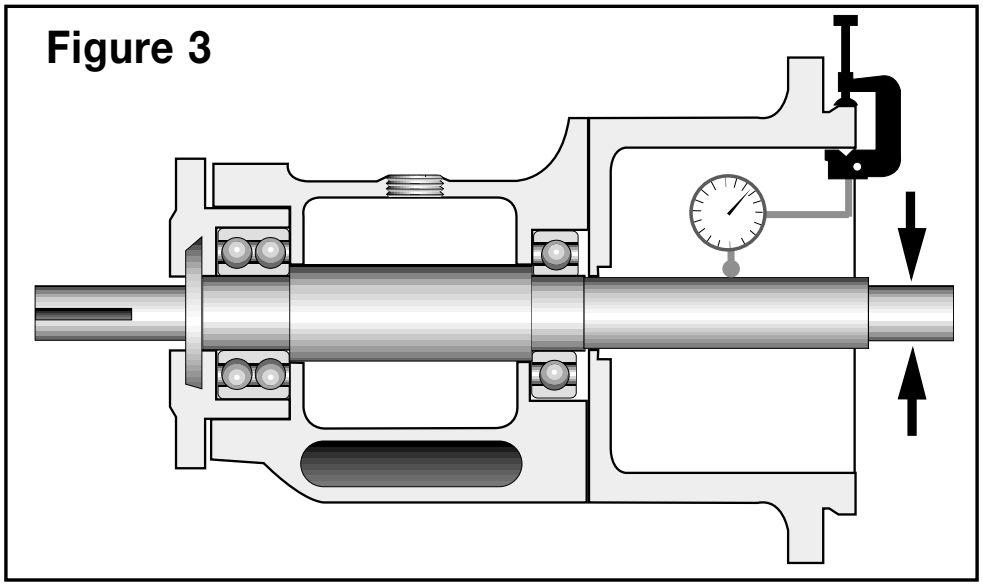

Seal chamber squareness to the shaft centreline should be within 0,015 mm per 25 mm seal chamber bore (.0005" per 1" seal chamber bore).
Note: make sure that shaft endplay does not affect the reading. Verify the smoothness of the seal chamber face for a good gasket joint.
See figure 4.

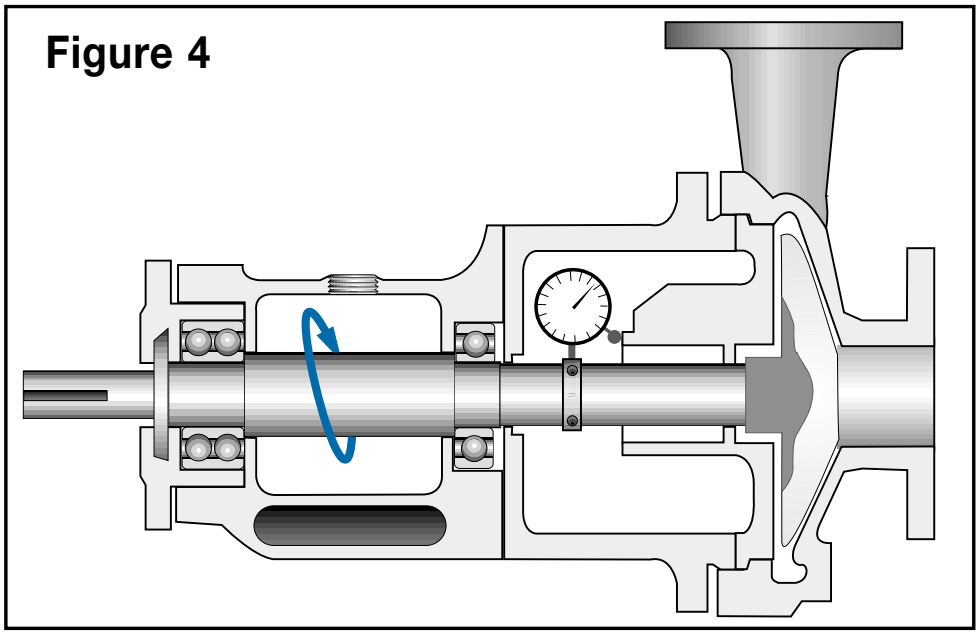

Concentricity of the shaft to the seal chamber bore should be within 0,025 mm per 25 mm shaft diameter (0.001" per 1" shaft diameter) to a maximum of 0,125 mm (0.005") TIR.
See figure 5.

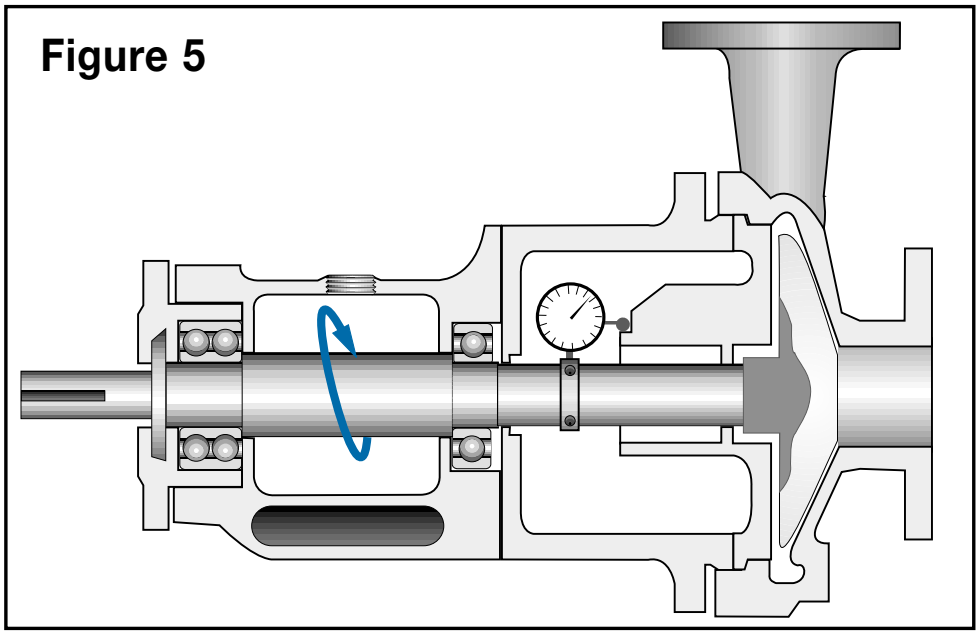

Break all sharp corners on shaft steps, threads, reliefs, shoulders, key ways, etc. over which gasket(s) must pass and/or seal against.

6. Mechanical Seal Installation

Correct seal setting is important in the successful operation of a mechanical seal. Cartridge seals unitize the complete seal assembly on a sleeve such that the entire seal is installed simultaneously. Component seals are assembled sequentially on the equipment and require careful measurements to properly locate and lock the rotating components relative to the stationary components. When measuring the setting or securing cartridge seals, always make sure the shaft is in the same position as when the equipment is operating (e.g. including the effects of thermal growth or contraction of the shaft relative to the casing).

To ease installation, gaskets may be lightly lubricated.
Lubricant must be compatible with both handled product and gasket material. Generally, silicon grease is suitable but this should be verified before applying.

Caution: avoid over compressing a bellows. This could result in reduced spring force and length.

6.1 Installation of Cartridge Type Seal with Setting Plates.

See figure 6

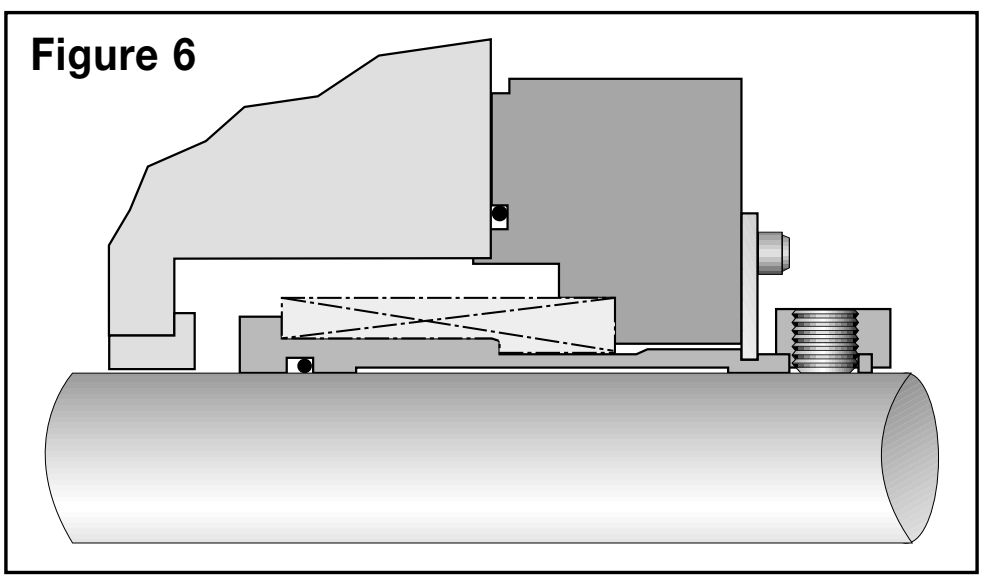

6.1.1 Check assembly drawing and seal assembly prior to installation.
6.1.2 Install the seal onto the shaft and locate against the face of the seal chamber.

6.1.3 Orient the ports on the seal flange(s) as indicated by the seal assembly drawing and connecting piping.

6.1.4 Evenly torque gland bolts/nuts to prevent cocking of the gland or uneven flange pressure against the seal chamber. Do not tighten drive arrangement screws.

6.1.5 Complete the remaining equipment assembly including thrust bearings, if applicable.

6.1.6 Ensure the setting plates are correctly located and engaged.

6.1.7 Tighten drive arrangement screws to the torque values shown on the seal assembly drawing.

6.1.8 Disengage setting plates from the sleeve and secure tightly in disengaged position.

6.1.9 Inspect equipment and driver alignment in accordance with coupling and / or equipment manufacturer's instructions.

6.1.10 After bringing the unit up to operating conditions (pressure and temperature), recheck pump to driver alignment.
Make adjustments as necessary.

6.2 Installation of a Cartridge Type Seal with Centring Tabs.

See figure 7

Figure 7

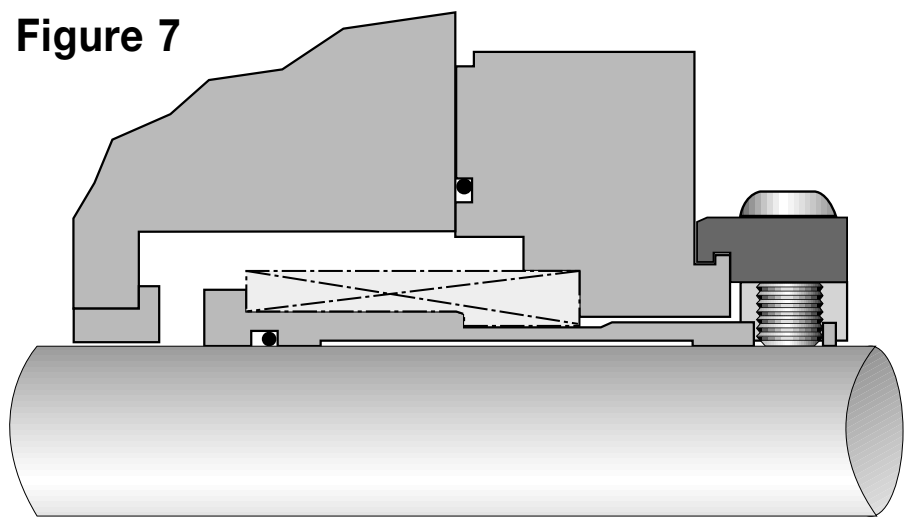

6.2.1 Check assembly drawing and seal assembly prior to installation.

6.2.2 Install the seal onto the shaft and locate against the face of the seal chamber.

6.2.3 Orient the connections on the seal flange(s) as indicated by the seal assembly drawing and connecting piping.

6.2.4 Install flange bolts/nuts, but do not tighten. The flange must be free to move radially.

6.2.5 Complete the remaining equipment assembly including thrust bearings, if applicable.

6.2.6 Ensure the centring tabs are correctly located and engaged.

6.2.7 Evenly torque flange bolts/nuts to prevent cocking of the flange or uneven flange pressure against the seal chamber.

6.2.8 Tighten drive arrangement screws to the torque values shown on the seal assembly drawing.

6.2.9 Remove centring tabs and store them in a known place.

6.2.10 Inspect equipment and driver alignment in accordance with coupling and / or equipment manufacturer's instructions.

6.2.11 After bringing the unit up to operating conditions (pressure and temperature), recheck pump to driver alignment. Make adjustments as necessary.

6.3 Installation of a Component Type Seal. See figure 8

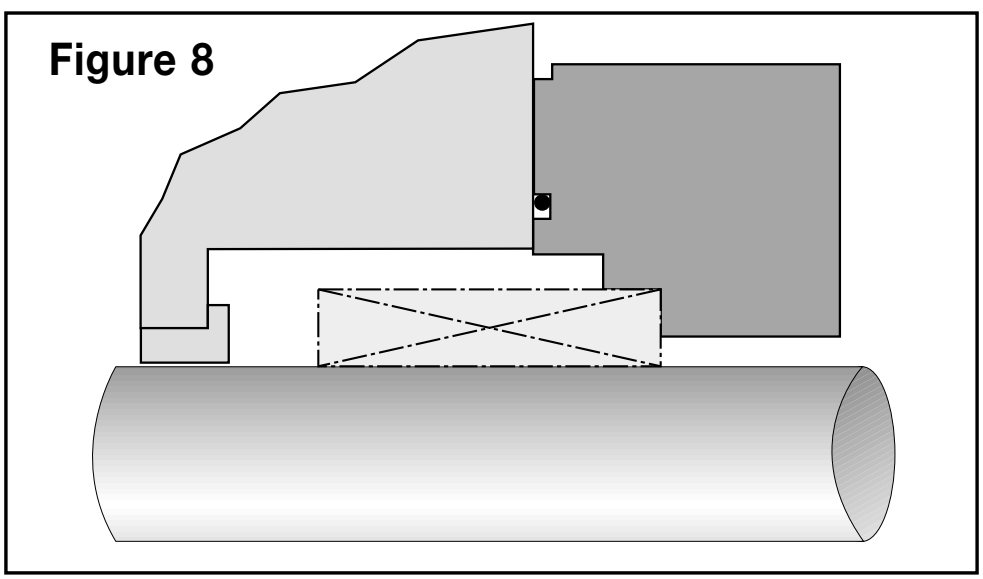

6.3.1 Check assembly drawing and seal components prior to installation. Ensure seal faces and joints are free of scratches, contamination and

other damage. Prior to installation, wipe lapped surfaces clean with a lint free cloth and quick drying solvent. Lubrication of seal faces is not recommended unless specified on the seal assembly drawing.

6.3.2 Assemble seal chamber and shaft (including thrust bearings, if applicable) and verify/scribe the seal setting distance as shown on the assembly drawing. Other setting aids such as spacer rings may be indicated on the assembly drawing.

6.3.3 When applicable, pre-assemble the rotating and stationary components or sub-components of the seal in accordance with the assembly drawing.

6.3.4 Assemble the seal components sequentially onto the equipment, fastening the rotating components. Locate the flange(s) against the face of the seal chamber.

6.3.5 Orient the connections on the seal flange(s) as indicated on the seal assembly drawing.

6.3.6 Evenly torque flange bolts/nuts to prevent cocking of the flange or uneven flange pressure against the seal chamber.

6.3.7 Complete the remaining equipment assembly including thrust bearings, if applicable.

6.3.8 Inspect equipment and driver alignment in accordance with coupling and / or equipment manufacturer's instructions.

6.3.9 After bringing the unit up to operating conditions (pressure and temperature), recheck pump to driver alignment. Make adjustments as necessary.

6.4 Installation of Seals with Hooked Type Sleeves (overhung pumps).

See figure 9

6.4.1 Check assembly drawing and seal components prior to installation. Ensure seal faces and joints are free of scratches, contamination and other damage. Prior to installation, wipe lapped surfaces clean with a lint free cloth and quick drying solvent. Lubrication of seal faces is not recommended unless specified on the seal assembly drawing.

6.4.2 Assemble seal chamber and shaft (including thrust bearings, if applicable) and verify the distance from the seal chamber face to

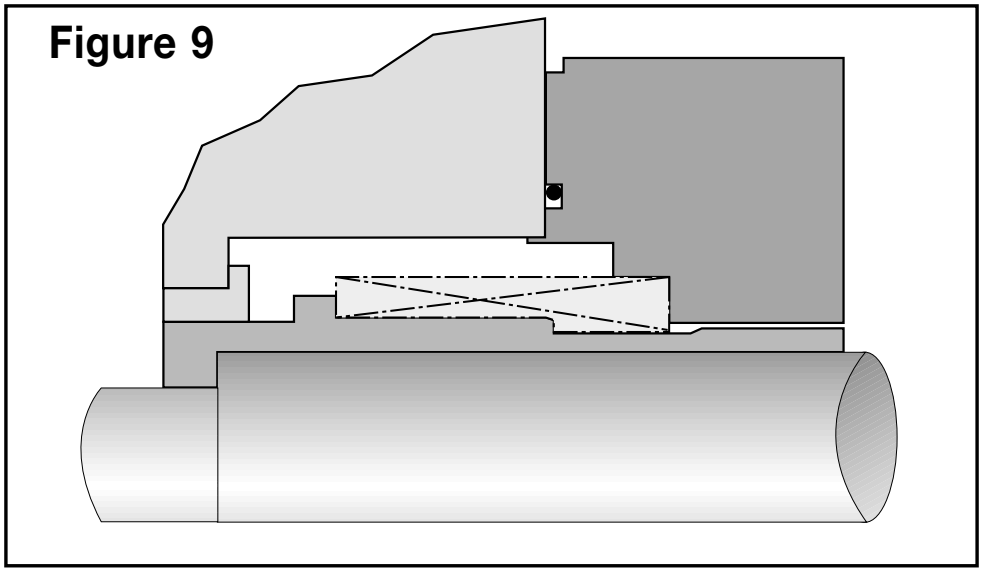

the end of the shaft as shown on the assembly drawing.

6.4.3 When applicable, pre-assemble the rotating and stationary components or sub-components of the seal in accordance with the assembly drawing.

6.4.4 Assemble the seal components sequentially onto the equipment. Locate the flange(s) against the face of the seal chamber. If applicable, install drive keys as indicated on the seal and/or pump assembly drawing.

6.4.5 Orient the connections on the seal flange(s) as indicated by the seal assembly drawing and connecting piping.

6.4.6 Evenly torque flange bolts/nuts to prevent cocking of the flange or uneven flange pressure against the seal chamber.

6.4.7 After the impeller nut is properly torqued, check that the sleeve is completely seated

6.4.8 Complete the remaining equipment assembly including thrust bearings, if applicable.

6.4.9 Inspect equipment and driver alignment in accordance with coupling and / or equipment manufacturer's instructions.

6.4.10 After bringing the unit up to operating conditions (pressure and temperature), recheck pump to driver alignment. Make adjustments as necessary.

7. Piping Instructions

Piping instructions are detailed on the mechanical seal assembly drawing. These instructions must be followed precisely to ensure correct seal operation. For auxiliary systems: carefully read the operating instructions provided with the system.

Minimize restrictions, especially in closed loop piping arrangements. Unless otherwise specified, the minimum internal diameter for pipe, tubing and connecting hardware should be 12,7 mm (.500”).

Total pipe length and number of bends should be kept to a minimum. Use smooth, large radius bends; do not use elbows, tees, etc. Orifices should be installed as far away from seal flange as possible. An exception to this rule should be made for orifices fitted to drain piping. To avoid clogging of the orifice it is advisable to install it in the seal flange so that the generated heat will serve to keep the leaked product fluid.

For “loop type” systems:
Pipe runs should be sloped continuously up or down to allow adequate circulation, proper venting and draining. Make sure that the loop, including seal flange, does not include vapor traps. Unless otherwise specified, reservoirs and coolers must be mounted 40 to 60 cm (15” to 24”) above the seal inlet or outlet connection, whichever is the highest, to promote thermosyphoning in standby condition.

Seals equipped with excess leakage detection:
Excess leakage detection, often used with single or non-pressurized dual seals, is commonly achieved by monitoring liquid level or pressure increases. With such an arrangement, the drain line for normal leakage must slope downward continuously to the point of exit (e.g. sump). Refer to the seal assembly drawing for additional piping requirements including the proper location of the restriction orifice and instrumentation.

8. Performance Testing of Pumps

Pump manufacturers will often perform pump performance tests on water with the mechanical seal installed. Some seal designs and face materials require special precautions to prevent damage to the seals during these tests.
For example, on seals with two hard faces, the seals may be provided with faces in alternate materials more suitable for the pump test medium. These faces are to be replaced with faces in the selected materials at the conclusion of the testing.

When high temperature seals with graphoil gaskets are tested on water during a pump performance test, the seals must be carefully dried after the test to prevent vaporization of water absorbed by the gaskets when the pump is brought to its (high) operating temperature.

Contact your Flowserve representative for additional information.

9. Operational Recommendations

9.1 The pressure and temperature in the seal chamber or of the barrier fluid must not exceed the recommended maximum seal limits. The shaft speed must also not exceed the seal's limits.

9.2 For seals using external cooling and/or an external flush, apply cooling and / or flush prior to seal start-up.

9.3 Single and dual non-pressurized (tandem) seals require adequate vapor pressure margin in the seal chamber to prevent flashing of the product at the seal faces.

9.4 Dual non-pressurized (tandem) seals require the buffer fluid pressure to be maintained at a value lower than the seal chamber pressure.
Buffer fluid pressure is usually equal to atmospheric or vapor recovery system pressure, unless otherwise specified.

9.5 Dual pressurized (double) seals require the barrier fluid pressure to be maintained at least 2 bar 30 psi) above the seal chamber pressure, unless otherwise specified. It is imperative to pressurize the barrier prior to pressurizing the equipment. Likewise, do not de-pressurize the barrier system until the equipment has been fully isolated, depressurized and vented.

9.6 If dual non-pressurized (tandem) seals are operated on a non volatile product, the primary seal leakage will not evaporate, resulting in contamination of the buffer fluid. Because the level in the reservoir will rise over time, periodically drain the reservoir to the "safe minimum level" as indicated on the reservoir or instructions and refill with fresh buffer fluid.

9.7 Flowserve can supply information on barrier fluid temperature and flow requirements based on product type, seal size, product temperature, barrier fluid characteristics and shaft speed.
Ensure that the barrier fluid is clean and compatible with the product.

9.8 This seal is designed to resist corrosion by the product(s) listed on the assembly drawing. Do not expose the seal materials to products other than those shown on the assembly drawing. The seal assembly drawing lists the materials of construction. Consult your Flowserve representative when in doubt or when using the seal for another application than for which it was selected.

9.9 Do not start the equipment dry (unless the seal is designed to operate in a gas). Open valves to flood equipment with product. Vent all air and/or product vapor from the equipment casing and the seal chamber before start up. Vent casing and tubing of heat exchange (if applicable). Process fluid must flood and pressurize the seal chamber at all times for single seal and non-pressurized dual seals. Barrier fluid must flood dual seals at all times during equipment operation.

9.10 Dual seals may be pressurized by means of a piston type pressure transmitter. Do not completely fill the transmitter at the time the equipment is taken into service. Always allow room for the piston to move downward (toward the “full” position) to avoid over pressurizing the seals. When the transmitter is filled to the limit, the piston will “bottom out” thus

creating a “ridged system”. Heat conducted from the equipment and/or generated at the faces will cause a rise in temperature of the barrier fluid causing it to expand. Failure to comply can result in pressures way beyond the capability of the seal(s).

9.11 When required, dry steam should be applied to the quench connection. Use a needle valve (or other flow restriction) to provide 0.1 bar (1 to 1.5 psi) steam to the quench connection on the seal flange. This should result in wisps of steam exiting the seal flange area. Ensure that all condensate is drained from the supply line and open the steam quench slowly before the pump is preheated to prevent thermal shock.

9.12 Start up equipment in accordance with normal operating procedures unless specifically requested otherwise by Flowserve.

If the equipment is not operating properly (e.g. seals and/or bearings running hot, cavitation, heavy vibration, etc.), shut down the equipment, investigate and remove the cause.

10. Shut down, disassembly

The equipment can be shut down at any time. Before the mechanical seal can be removed the equipment and de-pressurized. Barrier pressure (if applicable) must be relieved after the equipment has been de-pressurized.

Product may be released during removal of the mechanical seal. Safety measures and protective clothing may be required as per the plant’s safety regulations.

Further disassembly of the mechanical seal must be done according to the supplier’s specifications.

11. System check

Checking of the system, limits itself to monitoring pressure, temperature, leakage and consumption of barrier (buffer) fluid, when applicable.

12. Spare parts, repairs

This mechanical seal is designed to provide reliable operation under a wide range of operating conditions. However, repairs will be necessary when the seal reaches the end of its normal life expectancy or when it has been operated outside of its design capabilities.

This product is a precision sealing device. The design and dimensional tolerances are critical to seal performance. Only parts supplied by Flowserve should be used to repair this seal. These are available from the numerous Flowserve stocking locations.
To order replacement parts, refer to the part code, order number or B / M number, which can be found on the assembly drawing.
It is recommended to keep a spare seal on stock to reduce equipment downtime.

All liabilities and warranties to Flowserve for damage incurred through the use of non-original replacement parts and accessories will be rendered null and void.

Please note that special manufacturing and delivery specifications exist for all parts of our products manufactured or produced by ourselves and the replacement parts are always offered in accordance with the latest technology and with the most current regulations and laws.

Flowserve seals can normally be reconditioned. When repair is necessary, the seal should be carefully removed from the equipment (reinstall the centring tabs or setting plates if applicable).

Decontaminate the seal assembly and return it to a Flowserve authorized repair facility with an order marked “Repair or Replace”. A signed certificate of decontamination must be attached.

A Material Safety Data Sheet (MSDS) must be enclosed for any product that came in contact with the seal. The seal assembly will be inspected and, if repairable, a quotation will be made for restoring it to its original condition. Upon acceptance of the quotation, the parts will be rebuilt, tested, and returned to sender.

The information and specifications presented in this product brochure are believed to be accurate, but are supplied for information purposes only and should not be considered certified or as a guarantee of satisfactory results by reliance thereon. Nothing contained herein is to be construed as a warranty or guarantee, express or implied, with respect to the product. Although Flowserve Corporation can provide general application guidelines, it cannot provide specific information for all possible applications.
The purchaser/user must therefore assume the ultimate responsibility for the proper selection, installation, operation and maintenance of Flowserve products. Because Flowserve Corporation is continually improving and upgrading its product design, the specifications, dimensions and information contained herein are subject to change without notice.

FLOWSERVE®

Flow Solutions Division

MAJOR EUROPE, AFRICA & MIDDLE EAST CONTACTS

AUSTRIA, Sieghartskirchen, (43) 2274-6991. **BELGIUM,** Antwerpen, (32) 3-5460450. **DENMARK,** Allerød, (45) 48 176500. **FRANCE,** Courtaboeuf, (33) 1-69592400, Martigues,(33) 4-42-130270. **GERMANY,** Dortmund, (49) 231-6964-0. **ITALY,** Cormano (Milano), (39) 02-61558.1, Sicily, (39) 0931-994-770. **KINGDOM OF SAUDI ARABIA**, Al Khobar, (966) 3-857-3150. **THE NETHERLANDS,** Roosendaal, (31) 165-581400. **POLAND,** Katowice, (48) 32-252-8944, Warszawa, (48) 22-844-7108. **RUSSIA,** Moscow, (7) 095-737 0184. **SWEDEN,** Göteborg, (46) 705 24 7181. **SPAIN,** Tarragona, (34) 977-544400. **SWITZERLAND,** Oensingen, (41) 62-3883088. **UNITED ARAB EMIRATES (U.A.E.),** Abu Dhabi, (971) 2-317141. **UNITED KINGDOM,** Manchester, (44) 161-8691200.

WORLDWIDE HEADQUARTERS

UNITED STATES OF AMERICA 222 West Las, Colinas Blvd, Suite 1500 Irving, TX 75039 Dallas (1) 972-443-6500.

FIS 144 EUR
ORG 402 EUR

www.flowserve.com

Coupling Manual

COUPLINGS
& TRANSMISSION ELEMENTS

MOUNTING INSTRUCTIONS FOR LAMIDISC® DOAE COUPLING

JAURE, S.A. ERNIO BIDEA, S/N 20150 ZIZURKIL (Guipúzcoa) - SPAIN
Tel: (+34) 943 690054 Fax: (+34) 943 690295

Read all the instructions before proceeding to installation.

Mounting

The coupling is supplied assembled. Proceed as follows:

- *Loosen flange bolts (8,9) together with the insulating bushings (12) and washers (10,11)*

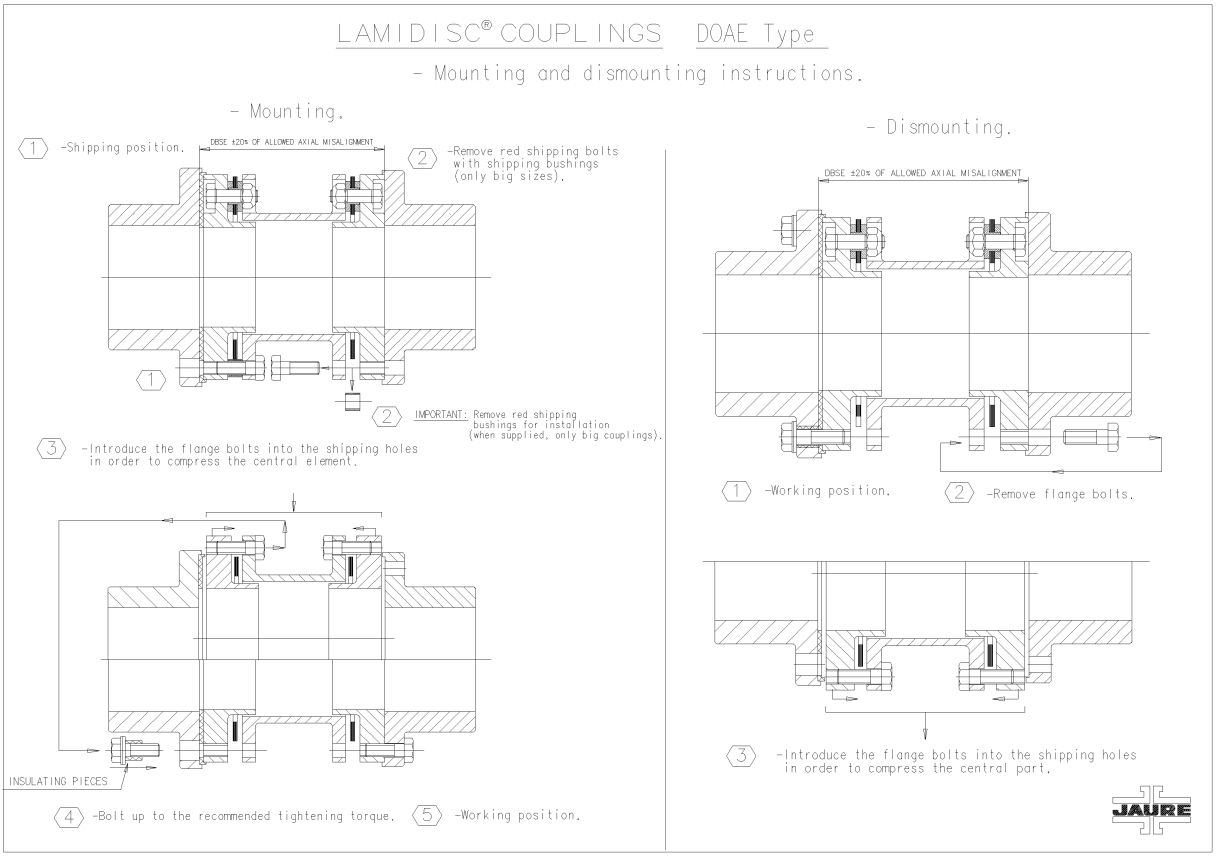

Fig. 2

JAURE, S.A. ERNIO BIDEA, S/N 20150 ZIZURKIL (Guipúzcoa) - SPAIN
Tel: (+34) 943 690054 Fax: (+34) 943 690295

– *Position the hubs (1,2) into the shafts.*

– *Before proceeding with mounting of central element as shown in fig. 2, check the radial alignment between both shafts. This can be done by using a dial indicator on the shaft, and the max TIR should be minimum: less than* the distance between the disc packs / 150 *(**1mm** for OF-12240). The minimum the best for the coupling life. As shown in figure 3, place the clock magnetic base on a shaft with the indicator on the opposite shaft.*

– *Proceed to axial alignment:*

Axial: The distance between shaft ends during installation should be 250±0.9mm for OF-12240 (DOAE-255-6). For a long life it is recommended that the discs are as close as possible to be flat. Therefore, the movements of the shafts caused by thermal expansion should be carefully considered. For instance, if the distance between shaft ends changes by –2 mm (the shafts are coming closer to each other) from cold to hot machines, the distance between shaft ends with cold machines should be intentionally be made larger by 2 mm when the coupling is installed.

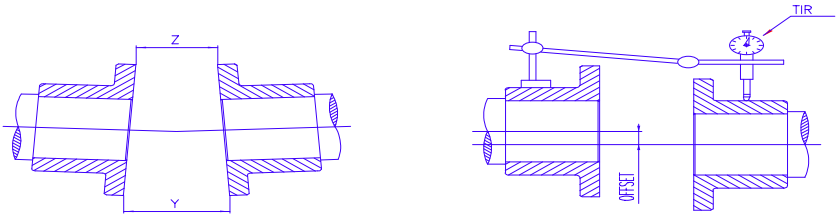

Fig. 3

However, it should be understood that the useful life of any disck pack coupling is directly influenced by the operating misalignment: the better the

JAURE, S.A. ERNIO BIDEA, S/N 20150 ZIZURKIL (Guipúzcoa) - SPAIN
Tel: (+34) 943 690054 Fax: (+34) 943 690295

alignment, the longer the coupling life.

- *Once the alignment has been checked, follow with installation: compress the central part (3,4,5) by means of 3 bolts (9) on each side. Insert the bolts through the holes made in spacer (4) and thread into flanges (3). Each disc pack should be compressed* ***3.3mm. Do not compress more than 3.3mm per side as the disc pack may result damaged.***

- *Insert the central part between both hubs (1,2).*

- *Face the connecting holes on flanges and remove the compression bolts.*

- *Introduce the flange connection bolts (8,9) and tighten them dry to the recommended torques using a torque wrench.*

Tightening the bolts of a coupling according to specification is very important!

- Once the coupling is in place, recheck the alignment. The condition of the alignment can be checked by looking at the discs. Check that the angular misalignment (y-z) is less than ***0.85mm*** *for OF-12240 (DOAE-255-6).*

Maintenance, Inspection

The coupling must be periodically (6 months) inspected to check any failure on the disc-packs as per pages 5 to 8. Check the selflocking nuts if they are assembled and disassembled many times. They should be changed once they have been disassembled 2-3 times and they have lost the self locking capability.

If the disc pack is damaged, the complete assembly must be returned for inspection. For disc pack inspection, see general instructions starting in Page 5.

JAURE, S.A. ERNIO BIDEA, S/N 20150 ZIZURKIL (Guipúzcoa) - SPAIN
Tel: (+34) 943 690054 Fax: (+34) 943 690295

GENERAL INSTRUCTIONS:

MOUNTING A GUARD OVER THE COUPLING

JAURE recommends that a guard be installed over a coupling, to protect from anyone touching a rotating part. Guards can be of many types, such as plastic or metal, expanded metal or solid metal. Jaure recommends the use of guards made of expanded metal or perforated metal. These guards allow the maintenance personnel to observe the coupling while it is running, and stop the machine in case they observe anything unusual.

In case the guards are made of solid metal, JAURE recommends that such guards be provided with an opening with a hinged cover, so that the couplings can be viewed when desired.

It is recommended that sufficient space be allowed between the coupling and the guard, so that foreign objects cannot become jammed there.

MAINTENANCE

*1.- **Maintenance between machine shut downs.***

Maybe the biggest advantage of the LAMIDISC® coupling is that does not require periodic maintenance when properly installed, and when misalignment does not exceed the one recommended, the LAMIDISC® coupling can operate without maintenance between the normal period between machine shut downs.

It is possible, however, that the misalignment worsens with time, and also that corrosive atmosphere weakened the discs. The LAMIDISC® coupling presents the advantage that both conditions can be observed without the need to shut down the machine. The only tool required is a stroboscopic light with adjustable frequency flashes. By illuminating the disc packs at night, both the misalignment and the condition of the discs can be observed.

JAURE, S.A. ERNIO BIDEA, S/N 20150 ZIZURKIL (Guipúzcoa) - SPAIN
Tel: (+34) 943 690054 Fax: (+34) 943 690295

A. Misalignment.

To evaluate the operating misalignment the disc packs must be observed from two opposite directions. The frecuency of the flashes of the stroboscopic light is adjusted so that the coupling is (apparently) stopped. This happens if the frecuency of the flashes is exactly the same as the number of revolutions per minute, but also if the frecuency is twice the number of revolutions per minute. This second condition must be avoided, as the observations will be misleading.

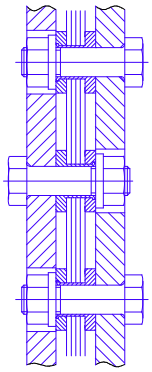

Disc pack under normal misalignment.

If misalingment is very small, then the discs in the disc pack will touch each other, and the coupling looks just like it appears when it is in the shipping box (see Fig.7). If the misalingment is large, then the discs between two bolts will become separated at one point, and non separated at the opposite end (see Fig.8). The amount of separation is a direct function of misalignment, which means that the larger the misalignment, the larger the separation.

If the couplings are observed on a regular basis, the maintenance department can asses if the misalignment becomes worse in time.

B. Failure of discs.

The outer discs of a disc pack are stressed higher than the inside packs. Therefore, if for any reason the discs will fail, the outer discs will fail first. Jaure has designed the coupling with sufficient safety margin that it can continue to transmit the rated torque even if the two outer discs have failed. However, once the outer discs fail, the next discs become the outer discs, and they can in turn fail.

JAURE, S.A. ERNIO BIDEA, S/N 20150 ZIZURKIL (Guipúzcoa) - SPAIN
Tel: (+34) 943 690054 Fax: (+34) 943 690295

The failure of the discs can be also observed using a stroboscopic light. For this, the frequency of the flashes must be slightly different than the number of revolutions per minute of the coupling. When iluminating the coupling, the disc pack will appear as it rotates very slowly. Therefore the coupling circumference can be observed. If one or both of the outer discs have cracks the coupling will appear as shown in Figure 9.

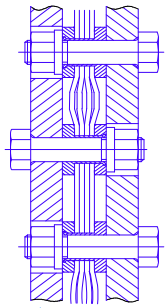

Disc pack under high misalignment.

JAURE recommends that the machine be stopped as soon as possible, because whatever condition caused the outer discs to fail will continue to exist, and eventually all the discs can fail. The damaged disc pack must be replaced with a new one, and no attempt should be made to open the pack.

*2.- **Maintenance and shut down.***

All the time a machine is shut down for routine maintenance, the discs, the bolts and the shaft surface (if hubs are removed) should be carefully observed. If cracks are seen on the outer discs of a pack the pack must be replaced, and the condition that caused the failure must be investigated. It should be remembered that failure of discs is an unusual condition and if it occurs there must be a cause.

Two of the main causes of disc failures are excessive misalignment and corrosion. If corrosion is observed on the disc surfaces the disc should be replaced and the cause of corrosion eliminated. Jaure offers discs covered with a special coating (as an option) that protects against many corrosive substances, and lengthen the useful life of the coupling.

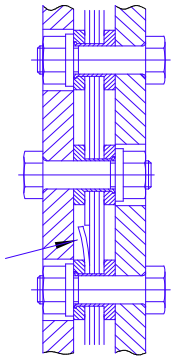

Disc pack with outer failed disc.

JAURE, S.A. ERNIO BIDEA, S/N 20150 ZIZURKIL (Guipúzcoa) - SPAIN
Tel: (+34) 943 690054 Fax: (+34) 943 690295

The bolt diameter should be observed for signs of commercial bolts, that could have the wrong geometry (thread length versus total length), or the wrong material. Jaure supplies sets of bolts for any LAMIDISC® coupling.

Shaft surfaces can become fretted if the hubs were installed with insufficient interference. If not corrected, fretting can result in complete shaft failure. Jaure's recommendations for hub installation should be reviewed.

For any additional information, please contact:

JAURE, S.A.
Ernio Bidea s/nº
20150 ZIZURKIL
SPAIN
Tel: +34 943 690054
Fax: +34 943 690295
e-mail : sales.dep@jaure.com

Motor
Manual

TECO Westinghouse

TECO ELECTRIC EUROPE LIMITED

Installation and Maintenance Instructions for Induction Motors

Up to 600kW

Installation and Maintenance Instructions

TECO Induction Motors up to 600kW

BEFORE INSTALLATION & USE

1. Ensure nameplate data corresponds with your requirements
2. Ensure the motor is undamaged
3. Remove any shaft clamp (but refit prior to transportation)
4. Slowly rotate the shaft to ensure free movement
5. Ensure the mounting/shaft orientation design and drain hole positions are correct for the application

WARNING

The following safety precautions must be observed:

1. Electric rotating machinery and electricity can cause serious or fatal injury if the motor is improperly installed, operated or maintained. Responsible personnel must be fully trained to understand the hazards to themselves and others before being involved in installing, operating, maintaining and decommissioning electric motors. European Union Safety information can be obtained from such as:
   BS4999; EN 60204-1; EN292; EN294

   IEE Wiring Regulations
   Particular industries and countries have further safety requirements. Refer to their trade & safety bodies, British Standards Institution, Dept of Trade & Industry, etc., for further information. For instance, in the USA, refer to NEMA MG2, the National Electrical Code, local safety requirements etc.

2. When servicing, all power sources to the motor and to the accessory devices should be de-energised and disconnected and all rotating parts at standstill.

3. Lifting means, such as eyebolts, on the motor are for lifting only the motor itself. Assemblies which are not part of the motor must be removed prior to using the motor lifting means. When more than one lifting means is provided on the motor, all must be used together, for instance by attaching a supporting chain to each, to share the load. Ensure that lifting means are fully attached to the motor before lifting.

4. Suitable ear protection must be worn near machinery emitting high audible noise to reduce the noise reaching the ear to a safe level.
   Expect sound pressure levels above 85dB at 1 metre from TECO model AEEB standard motors connected to a 50Hz supply as follows:
   2 pole - 37kW and above
   4 pole - 90kW and above

   Noise generally increases with frequency. Refer to TECO for noise levels at other poles and frequencies. Refer also for noise levels from other models and particular motors where for instance TECO have provided additional silencing.
   Refer to BS EN 60034-9:1994 for further information on noise from rotating electrical machines

5. Safety guards and other protective devices must neither be bypassed nor rendered inoperative.

6. The motor must be earthed. Refer to relevant standards such as EN60204-1, IEE Wiring Regulations etc.

7. A suitable enclosure must be provided for the motor to prevent access to moving parts. Extra caution should be observed around a motor that is automatically started or has automatic resetting relays or is remotely started in case such starting means has not been properly disabled and the motor starts unexpectedly.

8. Ensure all shaft keys present on moving parts are fully captive before the motor is started.

9. Ensure adequate safeguards have been made to protect against the consequences of a brake failure, particularly on applications involving overhauling loads.

10. TECO UL listed explosion proof motors must only be used in countries where the UL certification is recognised as being appropriate for the application. They are constructed to comply with the label service procedure manual and any repairs to them must be made by TECO or a UL listed service centre in order to maintain the UL listing.

11. When using a motor in a variable speed application ensure that it will not be driven above its safe maximum speed limit. Consult TECO if in doubt. Also ensure the motor is not overloaded: It should be remembered that as speed reduces, fans driven by the main shaft do not provide as much cooling air and an auxiliary fan may be required.

12. Protect the motor from overload, preferably by monitoring the winding temperature. TECO can fit thermistors to give indication that the winding is getting too hot and the thermistors can be connected to switchgear that will automatically trip on the signal from the thermistors.

13. Capacitors such as in single phase motors may remain charged even when isolated from the mains supply. Discharge capacitors and earth their terminals before handling any connections.

LOCATION

1. Drip proof motors are intended for use where the atmosphere is relatively clean, dry, well ventilated and non-corrosive. Refer to BS 4999 Part 105 for more detailed information on suitability of a particular enclosure rating.

2. Totally-enclosed motors may be installed where dirt, moisture or dust are present and in outdoor locations. Refer to BS 4999 Part 105 for more detailed information on suitability of a particular enclosure rating.

3. Explosion proof motors have many different categories because hazardous atmospheres can consist of many different gases which may or may not be present continuously. Individual countries/users can differ in their safety requirements so the suitability of an explosion proof motor for any particular hazardous location must be assessed against the standards and specifications in force for that location. They must not be used in hazardous locations unless it has been established that they do comply with the safety standards and specifications in force for that location.

4. Type N motors to BS 5000 : Part 16 have been designed to reduce the likelihood of sparking in normal operation and have surface temperature limitations. They may be acceptable in locations where an explosive gas-air mixture is not likely to occur in normal operation and if it occurs it will only exist for a short time. Before using any type N motor in such a location, ensure that safety standards and specifications in force for that location permit its use.

5. Chemical duty enclosed motors are designed for installation in locations where they may encounter corrosive substances and/or high moisture.

   Note: In all locations the surroundings must not obstruct the normal flow of ventilating air to and from the motor.

MOUNTING

1. Ensure the orientation of the frame is appropriate for the design of the motor. For instance, motors designed for B3 (horizontal shaft), may not be not be suitable without modification for V5 (vertical shaft) because any drain holes will be in the wrong position, additional fixings may be required to prevent the shaft sliding through the bearings and different bearings may be needed to withstand the thrust force.

   Drip proof motors may not be drip proof in the wrong orientation.

   Consult TECO to establish whether a motor may be safely used in an orientation different from that ordered.

2. Where the motor is to be subject to a high degree of vibration (such as on a vibrating screen), high humidity (typically above 95%), abnormal ambient temperature (typically outside the range -20 to +45oC), or high altitude (typically above 1000metre) ensure that the motor specification is appropriate.

3. When mounting the motor, ensure this is done securely using steel nuts and bolts through each of the fixing holes provided, fully tightened. Where the location is likely to cause rusting, such as in the presence of sea water, stainless steel fixing bolts may be an advantage. Where there is significant vibration, ensure there are shakeproof washers under the nuts.

4. Where the drain holes are to be left open, ensure they are guarded from access when the motor windings are connected to a power supply

5. With a directly-coupled load ensure the motor and load shafts are accurately aligned and use a flexible coupling between them. Mounting bolts must be carefully tightened to avoid alignment changes and the alignment rechecked to ensure it is correct when the bolts are fully tight.

6. With a side-coupled load, such as a belt or gear drive, ensure the side force on the shaft will not damage the motor. Consult TECO if in doubt.

POWER SUPPLY AND CONNECTIONS

1. Wiring of the motor and its controller, overload protection and earthing should be in accordance with the current edition of the IEE wiring regulations, EN60204 and all local safety requirements

2. Refer to the nameplate voltage and frequency to ensure the motor is correct for the power supply to which it is to be connected. Unless specified otherwise the motor may be assumed to be suitable for the nameplate voltage +/- 5% and nameplate frequency +/- 1%.

3. Connection diagrams for the motor are generally supplied with it, either on the nameplate, fixed to the motor or placed in the terminal box.

4. All TECO UL listed Explosion Proof motors have temperature limiting devices in the motor enclosure to help prevent excessive external surface temperature of the motor in accordance with UL standards. Terminals (P1, P2) of thermal protectors in these motors must be connected to the motor control equipment according to the connection diagram inside the terminal box. Note: these motors are not certified for use in hazardous areas in the European Union and must only be used in locations where the UL recognition is in force.

START UP

1. Initially, run the motor unloaded and establish that the rotation direction is as required. If not, **switch off and when rotation has stopped:**
   - if the motor is a three phase motor – interchange any two phases.
   - if the motor is a single phase motor – interchange the connections to the auxiliary winding circuit, leaving the connections to the main winding unchanged.

2. Then start the motor fully loaded. If it does not start quickly and run smoothly, switch off immediately and when rotation has stopped, isolate from the power supply and examine the assembly for mechanical faults or poor connections.

3. If there is excessive vibration it could be caused by poorly-aligned couplings, loose mounting bolts, lack of rigidity in the supports, transmitted vibration from adjacent machinery etc. Excessive vibration can lead to motor damage, for instance to the bearings making them noisy, and hence vibration should be minimised.

4. Ensure the current drawn is commensurate with that shown on the nameplate and that the currents in each phase are similar.

5. If a single phase motor does not start, this may be due to the internal starting switch not closing when the rotor is stationary or a faulty starting capacitor.

LONG TERM STORAGE AND HUMID ENVIRONMENTS

If the motor has been stored for an extensive period or subjected to adverse moisture conditions, ensure the insulation resistance is greater than 1MOhm before switching on. Also, regrease the bearings and if they are rusty, replace them.

When the insulation resistance is not greater than 1MOhm, dry out the motor as described below. If after drying out the insulation resistance is still not greater than 1MOhm, the motor will need repairing.

DRYING OUT

This may be carried out either:

1. By baking in an oven at up to 90oC. Ensure the interior and exterior of the oven are well ventilated.

2. By locking the rotor so it cannot move and connecting a low voltage to the motor windings. Gradually increase the voltage from zero until the current is about one third the rating plate value. Trim the voltage as necessary so that the winding temperature remains below 90oC.

   Drying out is complete when the insulation resistance stops changing.

MAINTENANCE

Inspection

Inspect the motor at regular intervals. Ensure it is kept clean with clear ventilation openings, there is no excessive vibration and noises emitted from the motor are normal. Ensure fixings and fasteners have not loosened nor so corroded that either their strength has been reduced significantly or earthing has been impaired. Ensure also that electrical connections are tight and uncorroded and that earthing is intact.

Inspect shaft seals and terminal box gaskets to ensure they are in position and not significantly worn. Contact TECO if the seal/gasket types on the motor are unknown. Examine the paint finish and repaint if necessary to avoid excessive corrosion. Ensure that shaft couplings are fixed firmly and that shaft alignment is correct. Ensure also that there is no build up of liquid inside the motor that would adversely affect its performance and drain if there is.

Lubrication

Motors with double shielded (suffix "ZZ" on bearing type) bearings are lubricated for life and cannot be relubricated.

Larger frames (usually Frames D200 and above, D180 2 pole and C180 and above) in particular have regreasing facilities. These motors are shipped already-greased and the grease should be replaced at regular intervals. The length of the interval varies with size of motor and how it is used. The table below gives a guide to relubrication intervals. Excessive or too frequent lubrication may actually damage the motor.

Rated kW output	Poles	Relubrication period		
		Standard conditions	Severe conditions	Extreme conditions
0-30	4 upwards	7 years	3 years	6 months
37-75	4 upwards	210 days	70 days	30 days
90-185	4 upwards	90 days	30 days	15 days
0-18.5	2	5 years	2 years	3 months
22-75	2	180 days	60 days	30 days
90-110	2	90 days	30 days	30 days
132-600	2	90 days	30 days	15 days

For other ratings please refer to TECO.

DEFINITIONS

Standard conditions: 8 hour operation per day with rated or light loading in a clean low-vibration environment.

Severe conditions: 24 hour operation per day with rated/light loading or in a dirty/dusty environment or where the motor is subject to vibration/light shock loading.

Extreme conditions: Where there is heavy shock loading or high vibration or a very dirty/dusty environment.

REGREASING OPERATION

If regreasing is to be carried out with the motor running, ensure it is done only by properly-trained personnel and that live and moving parts are fully guarded.

Ensure the grease exit is open and the grease nipple is clean

Attach a low pressure grease gun to the nipple and pump in grease until clean grease emerges at the grease exit.

Remove the grease gun. Fully guard live and moving parts and then run the motor for 10-30 minutes ensuring that any surplus grease is properly disposed of, and then refit any grease exit plug.

GREASE TYPE

Ensure only the correct type of grease is used. Greases incompatible with that in the bearings can greatly reduce the bearing life. Consult TECO if you are not sure of the type supplied in your TECO motor.

TECO standard regreasable motors use Esso Unirex Lithium N3 grease.

SPARES

Use only genuine TECO spares or alternatives recommended by TECO. When ordering, please give full nameplate details and in particular:

Frame Number	
Type	
Poles	
kW	
Serial Number	

Quantity required	

For further Information, please contact:
TECO ELECTRIC EUROPE LTD
TECO Building · Marshall Stevens Way · Westinghouse Rd
Trafford Park · Manchester · M17 1PP
Tel: +44 (0)161 877 8025
Fax: +44 (0)161 877 8030
Email: enquiries@teco.co.uk

www.teco.co.uk

TECO Westinghouse

TECO ELECTRIC EUROPE LIMITED

TECO ELECTRIC EUROPE LTD
TECO Building · Marshall Stevens Way · Westinghouse Rd
Trafford Park · Manchester · M17 1PP
Tel: +44 (0)161 877 8025
Fax: +44 (0)161 877 8030
Email: enquiries@teco.co.uk

www.teco.co.uk

EMD10579 Issue 2 FEB 2002

Project:
LAVRION V-CCPP DMKT 11 21 302

Title: Installation & Operation & Maintenance Manual
Circulating Water Pumps (5PAC10/20 AP001)

Supplier Document No:	-	Issue: 3
KKS Document No:	5-PAC-GMP-FPD-233	
Purpose of issue: Final		Date: 23/06/05

00-Y-X-10302-F3/I Issue 1

Prepared: MM

Reviewed: JM

Approved: CV

LAVRION V
METKA S.A

Type 45APMA

Pump manual

Ref. FLOWSERVE: 10.07.50.10897

Flowserve Spain,S.A.
Avenida Fuentemar,26-28
Pol.Ind.-28820 COSLADA (Madrid)

Pump Division

CLIENT: METKA S.A

PUMP TYPE: 45APMA

2 FILTERED SEAWATER PUMPS

END USER: PPC

TAG No.: 5PAC10 AP001
5PAC20 AP001

INSTRUCTIONS MANUAL

Flowserve Ref.: 10.07.50.10897

INDEX

Security instructions

PUMP DIVISION
COSLADA (MADRID)

SAFETY INSTRUCTIONS
ENGLISH

This safety instructions and warnings must be followed in addition to the instructions found in the Installation, Operation and Maintenance Manual for the specific equipment to which they are attached.

IMPORTANT: This page of safety instructions is intended as a guide and neither modifies nor restricts in any way the contractual terms set out in the sales agreement. Nor does it affect the equipment guaranties.

WE RECOMENDED THAT FOR ANY ASSEMBLY, REPAIR, STARTING-UP OR SERVICE WORK, YOU USE THE SPECIALISED SERVICES OF FLOWSERVE Pump Division AFTER-SALES STAFF.

DANGER!

Throughout the operation of the pumps and complementary equipment, situations occur involving various potential risks: pressure, temperature, acoustics, fluid projection, rotating parts, etc.. All of these can give rise to serious personal and material damage if the safety and maintenance recommendations for the equipment are not observed.

DANGER!

IN THE EVENT OF ANY MALFUNTIONING, SWITCH OFF THE AFFECTED EQUIPMENT IMMEDIATELY.

CAUTION!

Those persons in charge of installation must ensure that all work is carried out at all times by **qualified personnel who have received adequate instruction and training and are acquainted with the interpretation and application of safety standards.** They should have available those necessary means and instructions which will enable them to undertake the work correctly and their work should be supervised by skilled and responsible staff. Care should also be taken to prohibit anyone who is not suitably qualified from working with the pumps and their equipment.

CAUTION!

The equipment operating conditions shown on the pump's name plate and in the ordering specifications should not be modified **without written consent** from FLOWSERVE Pump Division. In the event that modifications are made without FLOWSERVE's authorisation, **the client will be responsible** for ensuring that these meet the safety standards applicable. Should you require any further information regarding new applications of the product or its operation, please contact FLOWSERVE Pump Division Sales Office. In doing so, the serial number and pump type must be quoted.

CAUTION!

The equipment's Service Manual sets out the periodic services which must be performed to ensure that the equipment will operate correctly.

Pump
Manual

TABLE OF CONTENTS

LIST OF APPLICABLE DOCUMENTS

General Arrangement Drawing	5-PAC-MDA-FPD-201
General notes to GA drawing	5-PAC-MRP-FPD-235
Cross Sectional Drawing	5-PAC-MDP-FPD-224
Pump data sheet	5-PAC-MHP-FPD-222
Pump performance curve	5-PAC-MDG-FPD-223
Piping & Instrumentation drawing	5-PAC-MDD-FPD-206
Instrument list	5-PAC-YLP-FPD-227
Spare part list	5-PAC-MLJ-FPD-104
Motor outline drawing	5-PAC-EDP-FPD-254
Motor data sheet	5-PAC-EMP-FPD-252
Motor wiring diagram	5-PAC-ESK-FPD-262

0

INTRODUCTION

☑	NOTE

During initial start-up of this equipment, it is essential that all of the instructions in this manual be adhered to strictly. It is recommended that the services of a Flowserve service supervisor be obtained to assure trouble-free operation. In some cases, start-up in the presence of a Flowserve service supervisor may be a contractual requirement for continuation of warranty. Check your contract.
To schedule a service supervisor, contact Flowserve customer service department (34 916603650) or contact your local Flowserve Sales Office.

0.1.- PREFACE AND SAFETY

0.1.1.- PREFACE

This manual contains instructions for installation, operation, and maintenance and servicing of your Flowserve Pump. It has been designed to provide safe and reliable service. It is both a pressure vessel, and a rotating machine, therefore, the operators must exercise good judgement and proper safety practices to avoid damage to the equipment and surroundings, and prevent personal injury.

The instructions in this manual are intended for the guidance of personnel with a general training in operation and maintenance of centrifugal pumps. It is our hope that you will become acquainted with its content as an aid to better pump performance. This manual should be read in its entirety before installing and/or operating the equipment. The General Arrangement and Sectional Drawings should be consulted for accurate details and determination of specific optional features that are furnished with your pump. All numbers in parenthesis (···) following part names correspond to the part numbers on the Sectional Drawing.

0.1.2.- SAFETY

It is assumed that your Safety Department has established a safety program based upon a thorough analysis of industrial hazards. Before installing, operating, or performing maintenance on the pump and associated components described in this manual the safety program must be reviewed to ensure that it covers the hazards arising from high-speed rotating machinery.

It is important that due consideration be given to those hazards which arise from the presence of electrical power, hot oil, high-temperature liquids, toxic liquids or gases, and/or flammable liquids or gases. Proper installation and care of protective guards, shutdown devices, and over-pressure protection equipment shall also be considered an essential part of any safety program.

Also essential are special precautionary measures to prevent the possibility of applying power to the equipment at any time when maintenance work is in progress. The prevention of rotation due to reverse flow must not be overlooked. In general, all personnel should be guided by all of the basic rules of safety associated with the equipment and the process.

READ THIS BEFORE PROCEEDING FURTHER

TO THE READER

Throughout this manual you will encounter the words *WARNING*, *CAUTION*, and *NOTE*. These are intended to empathise certain in interest of operator safety and satisfactory pump operation/maintenance. The definitions of these words are as follows:

WARNING

AN OPERATING PROCEDURE, PRACTICE, ETC, WHICH, IF NOT CORRECTLY FOLLOWED, COULD RESULT IN PERSONAL INJURY OR LOSS OF LIFE.

CAUTION

AN OPERATING PROCEDURE, PRACTICE, ETC, WHICH, IF NOT STRICTLY OBSERVED, COULD RESULT IN DAMAGE TO, OR DESTRUCTION OF EQUIPMENT.

NOTE

An operating procedure, condition, etc, which is essential to highlight.

WARNING

IN THE INTEREST OF OPERATOR SAFETY, THE UNIT MUST NOT BE OPERATED ABOVE THE NAMEPLATE CONDITIONS. SUCH OPERATION COULD RESULT IN UNIT FAILURE CAUSING INJURY TO OPERATING PERSONNEL. CONSULT INSTRUCTION BOOK FOR PROPER OPERATION AND MAINTENANCE OF THE PUMP AND ITS SUPPORTING COMPONENTS.

WARNING

IN THE INTEREST OF OPERATOR SAFETY WHEN HANDLING ANY HEATED PARTS, PROTECTIVE GLOVES OR OTHER SUITABLE PROTECTION MUST BE WORN.

CAUTION

AT NO TIME IS THE PUMP WEIGHT TO BE SUPPORTED ON THE SUCTION HEAD OR BELL.

WARNING

OBSERVE EXTREME CAUTION WHEN VENTING AND/OR DRAINING HAZARDOUS LIQUIDS. WEAR PROTECTIVE CLOTHING IN THE PRESENCE OF CAUSTIC, CORROSIVE, VOLATILE, FLAMMABLE OR HOT LIQUIDS. DO NOT BREATHE TOXIC VAPOURS. DO NOT ALLOW SPARKING, FLAMES OR HOT SURFACES IN VICINITY OF THE EQUIPMENT.

1
PUMP GENERAL DATA

BOLTING TORQUE VALUES

PARTS	SIZE	TORQUE Nm
SUCTION BELL (27) TO CASING SHROUD (06)	M22	625
CASING SHROUD (06) TO OUTER COLUMN (34A/B)	M24	830
OUTER COLUMN (34A/B) TO DISCHARGE HEAD (01)	M24	830
DISCHARGE HEAD (01) TO BASEPLATE (30)	M27	1180
DISCHARGE HEAD (01) TO MOTOR SUPPORT (17)	M24	830
IMPELLER (1200) TO LOCK COLLAR (0852)	M18	330
IMPELLER SHROUD (06) TO CASING (33)	M27	1180
CASING (33) TO DIFFUSOR	M22	625
CASING (33) TO INNER COLUMN (34C/D/E)	M16	235
OUTER COLUMN (34A/B) TO INNER COLUMN (34C/D/E) OR BEARING GUIDE (19)	M20	460
STUFFING BOX EXTENSION (02) TO DISCHARGE HEAD (01)	M20	460
MOTOR TO MOTOR SUPPORT (17)	M30	1615
THRUST BEARING HOUSING TO MOTOR SUPPORT (17)	M16	235
ANCHOR BOLTS	M36	2100

Torque values listed above are selected to achieve the proper amount of pre-stress in the threaded fastener. Maintenance personnel must insure that threads are in good condition (free of burrs, galling, dirt, etc) and that commercial thread lubricant is used. Torque should be periodically checked to assure that it is at the recommended value.

PUMP OPERATING CURVES

Project:

LAVRION V-CCPP
DMKT 11 21 302

Title: Performance Curves (Circulating Water Pumps 5PAC10/20 AP001)

Supplier Document No:	-	Issue: 0
KKS Document No:	5-PAC-MDG-FPD-223	
Purpose of issue: For approval		Date: 8/07/04

00-Y-X-10302-F3/I Issue 1

Prepared: MM

Reviewed: JM

Approved: CV

Client:	**METKA**	Project:	**LAVRION V CCPP**
End User:	**PPC**	Service:	**Circulating Water Pumps**
Location:	**GREECE**	Reference:	**5PAC10-AP001 & 5PAC20-AP001**
Pump Type:	**45 APMA**	Quantity:	**2**
Flow:	**13.430** m^3/h	TDH:	**12,5** m
RPM :	**490**	Curve Number:	**30-MAN-1520**

PERFORMANCE CURVES

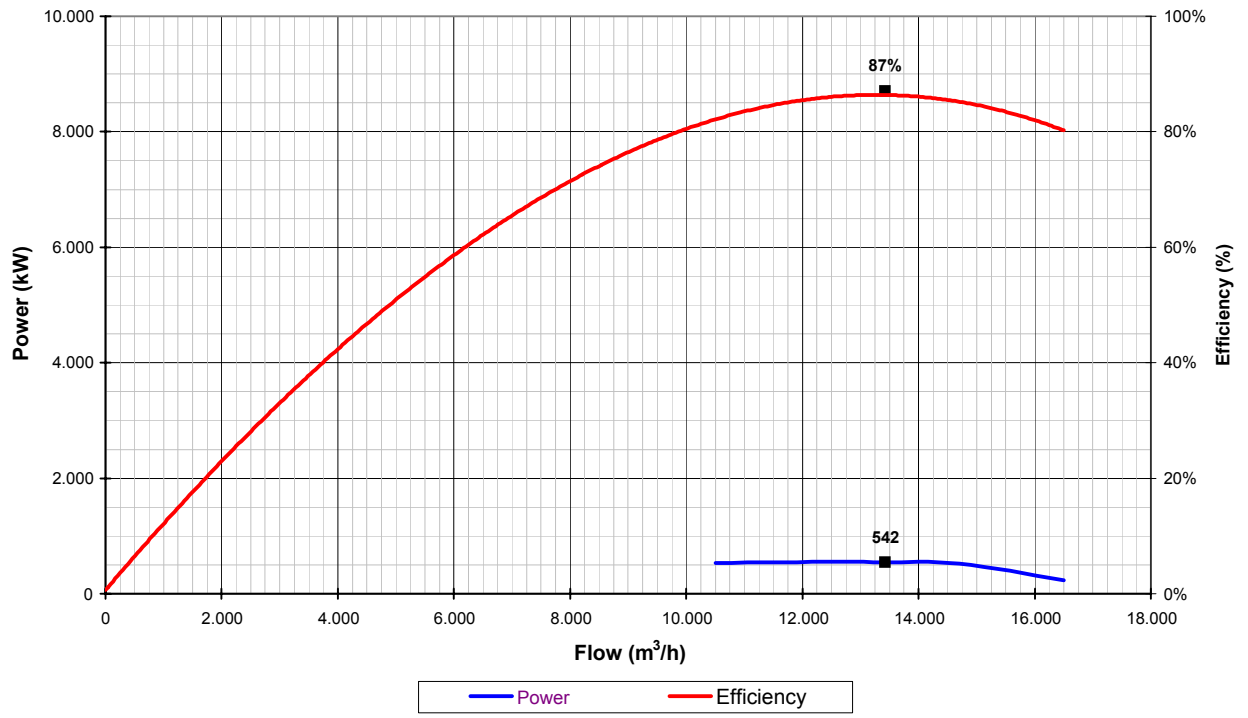

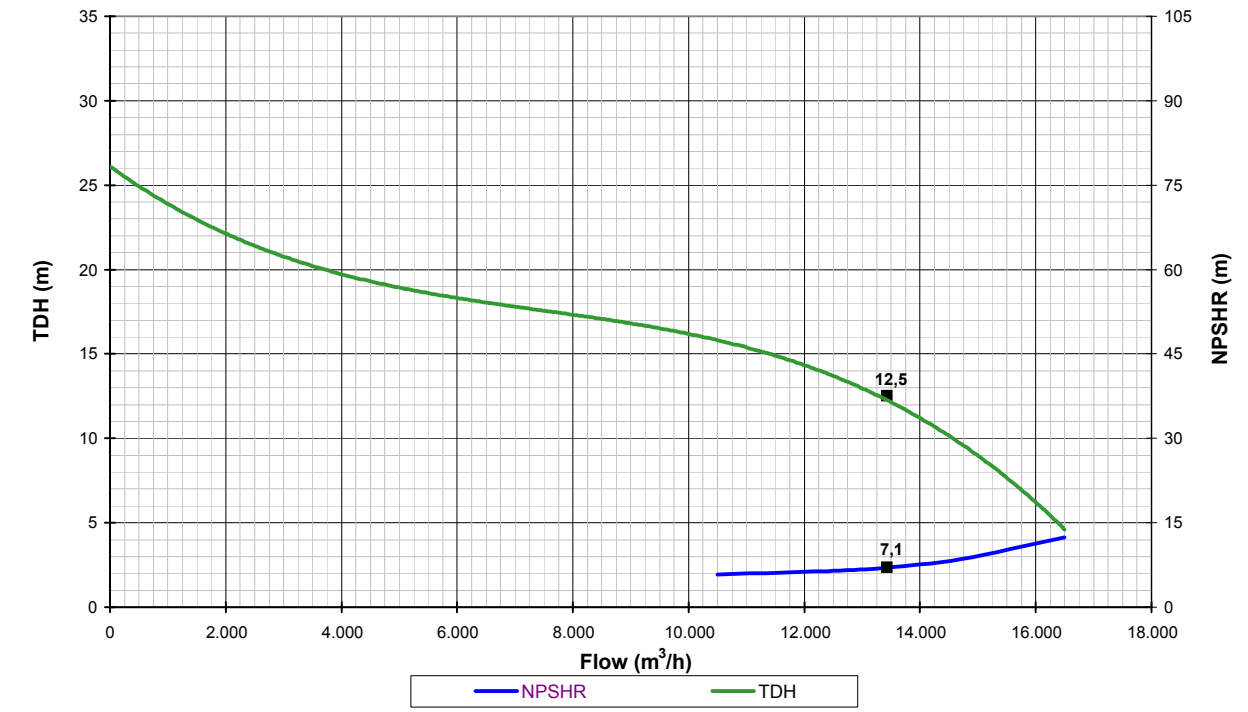

Curves are approximate. Pump is guaranteed for one set of conditions. Capacity and head guarantees are based on shop tests. Efficiency is being calculated at cold conditions.

Client:	**METKA**	Project:	**LAVRION V CCPP**
End User:	**PPC**	Service:	**Circulating Water Pumps**
Location:	**GREECE**	Ref.:	**5PAC10-AP001 & 5PAC20-AP001**
Pump Type:	**45 APMA**	Quantity:	**2**
Design Flow:	**13.430** m^3/h	TDH:	**12,5** m
RPM :	**490**	Curve Number:	**30-MAN-1520**

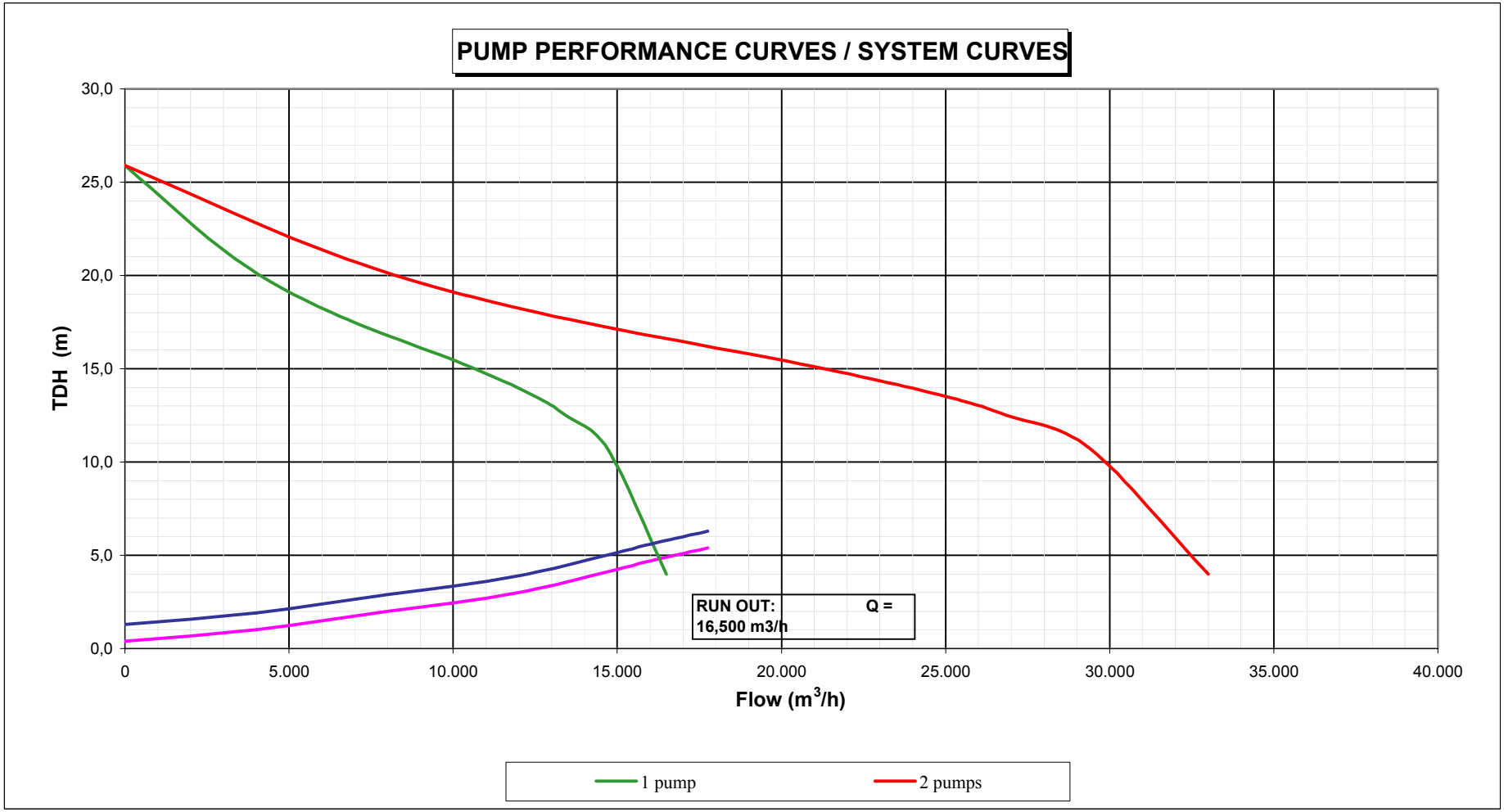

2

STORAGE REQUIREMENTS

2.1.- Extended storage requirements for vertical pumps. GENERAL

During extended periods of storage prior to installation and from the time of installation until commercial operation, precautions must be taken to protect the pump from deterioration. The various parts of the pump are protected prior to shipment by applying varying grades of preservative and paint.

However, during shipment and handling, the preservatives are subjected to conditions that can cause their removal. Also, during extended periods of time, the preservatives may deteriorate. The following procedures should be followed to prevent deterioration of the pump during the extended storage period. These procedures may also be supplemented by the experience of the person(s) performing the tasks.

It should be noted that, unless otherwise specified in the contract, full responsibility and costs associated with the storage and inspection of the equipments rest with the customer.

Caution

AT NO TIME DURING STORAGE OR HANDLING SHOULD PUMP BE ROTATED ON THE SUCTION BELL (15) OR CASING (1).

2.2.- Inspection Upon Arrival

When the pump is received, it should be inspected for damage or other signs of rough handling. Any damage should be reported to the carrier immediately.

Inspect the preservative coating on the various parts. If necessary, renew the preservative in areas where it has been rubbed off or scraped.

Inspect all painted surfaces. If necessary, touch up the areas where paint has been chipped or scraped.

The rotor is shipped in a blocked position. Do not remove blocking until unit is to be installed. This will minimise bearing loads and rotor distortion.

Inspect all covers over pump openings and piping connections. If covers or seals for the covers are damaged or loose, they are to be removed, and a visual inspection made of the accessible interior areas for accumulations of foreign materials or water. If necessary, clean and recoat the interior parts preservative as noted above to restore the parts to the “as shipped” condition. Install or replace covers and fasten securely.

2.3.- STORAGE AREA

When selecting a storage area, the following should be taken into consideration:

a) The deterioration of the equipment will be proportionate to the class/type of storage provided.

b) The expenses involved in restoring the equipment at time of operation will be proportionate to the class/type of storage provided.

2.3.1.- STORAGE PREFERRED (DRY)

If at all possible, the pump and its component parts should be stored indoors where they will be protected from the elements. In no case should pump element be subjected to extended periods of submergence or wetting prior to start-up. If it is not possible to store the pump and its components indoors, precautions must be taken to protect them from the elements. Regardless of whether storage is inside or outside, the storage area should be vibration-free. All boxes marked for inside storage should be stored indoors. When stored outdoors, the pump and its components should be protected from dirt, dust, rain, snow, or other unfavourable conditions by heavy-gauge plastic sheets, canvas, waterproof burlap or other suitable coverings.

All equipment must be placed upon skids or blocks to prevent contact with the ground and surface contaminants. Equipment must be adequately supported to prevent distortion and bending.

2.3.2.- Inspection And Maintenance

a) Customer inspection and maintenance:

The stored equipment is to be placed on a periodic inspection schedule by the customer.

☑ ***NOTE*** ☑

THE RESPONSIBILITY FOR SETTING UP AN INSPECTION SCHEDULE RESTS WITH THE CUSTOMER AND WILL BE DEPENDENT UPON THE CLASS/TYPE OF STORAGE PROVIDED. IT WOULD BE EXPECTED THAT, INITIALLY, INSPECTION WOULD OCCUR WEEKLY; THEN, DEPENDING UPON THE INSPECTION REPORTS BEING FAVOURABLE OR UNFAVOURABLE, INSPECTION WOULD CONTINUE WEEKLY, MONTHLY OR QUARTERLY, AS MAY BE DETERMINED.

Each inspection should consist of a general surface inspection to assure that:

1) Pump supports are firmly in place.

2) Pump covers over openings are firmly in place.

3) Pump covering, plastic or traps are firmly in place. Any holes or tears must be repaired to prevent entrance of dirt or water.

4) Pump covers are periodically removed from openings and interior accessible areas inspected. If surface rusting has occurred, clean and repaint or recoat with preservative.

5) If rusting occurs on exterior surfaces, clean and repaint or recoat with preservative.

6) Check individually wrapped parts for signs of deterioration. If necessary, renew preservative and wrapping.

b) Six months prior to installation:

Six months prior to the scheduled installation date, a Flowserve representative is to be employed to conduct and inspection. This inspection will include (not necessarily in its entirely), but will not be limited to, the following:

1) An inspection of all periodic inspection records as kept on file by the customer, and all inspection reports that have been compiled during the storage period.

2) An inspection of the storage areas to determine the “as stored” condition of the equipment prior to any protective covers being removed.

3) An inspection of the equipment with protective covers and flange covers removed.

4) Depending upon the length of time the equipment was stored and the class/type of storage provided (indoor, heated, unheated, ground floor, concrete floor, out-of-doors, under roof, no roof, waterproof covering, on concrete, on ground), and as a result of the inspection of 1, 2, and 3 above, the Flowserve representative may require a partial or complete dismantling of the equipment.

5) Dismantling may necessitate restoration of painted or preserved surfaces, and/or replacement of gaskets, “O” rings, packing and bearings.

6) All costs involved during inspection, dismantling, restoration, replacement of parts and reassemble will be the account of the customer. The customer will supply all necessary labour, tools, and cranes.

Upon completion of the inspection, the Flowserve representative shall submit a report to the customer and to the Manager of Customer Service, stating in detail the results of the inspection.

c) One month prior to installation:

One month prior to installation of the equipment, a Flowserve representative is to be employed to conduct a final inspection. This final inspection will be made to assure that the requirements of the six-month inspection report were satisfactorily completed and that the equipment is ready for installation.

Upon completion of this inspection, the Flowserve representative shall submit a final report to the customer and to the Manager of Customer Service advising the results of the final inspection.

All costs involved in conducting the final inspection will be to the account of the customer.

2.3.3.- STORAGE NON PREFERRED (WET)

It is recommended that the pumping element not to be subjected to extend periods of submergence or wetting prior to its start-up. However, it is recognised that, in some cases, a long period may lapse from its installation until its commercial operation. If so, the following inspection and maintenance procedures should be performed where applicable:

1. Isolate pumps from system with valve; tag (and seal) all valves.

2. Couple pump to motor if desired.

3. Fill the pump with preservative fluid (50% water / 50% ethylene glycol, or other owner approved) to aid in preserving pump and prevent its freezing.

2.4.- START-UP

Prior to and during start-up, any requirement for the services of a Flowserve representative will revert back to the original contract agreement for the equipment purchased.

2.5.- PAINTING AND PRESERVATION

Paints and preservative used are either Flowserve standard or special as required by the contract specification.

2.6.- DRIVER

Generally, rotor should be blocked to relieve bearing loads. Storage must be indoor and dry. See the specific manufacturer's storage requirements.

2.7.- PUMP (INSTALLED) STORAGE PROCEDURE FOR EXTENDED PERIODS OF INACTIVITY

If the pump will not be operated for an extended period of time (more than 1 month) in the installed condition, the following steps should be taken to prevent corrosion damage to the pump components:

1) The pump should be dewatered.

2) The exterior below mounting portions of the pump should be washed down with high-pressure potable water.

3) Every effort should be made to wash down the internal portions of the pump with high-pressure potable water.

4) The discharge head vent connection of the pump should be opened up to the atmosphere to allow the greatest amount of air exchange to take place within the pump.

The pump should be flushed every two weeks for a period of 15 minutes during which time the pump and motor rotor should be turned manually for several rotations. This can be accomplished by using a strap wrench on the pump-motor coupling.

3

EQUIPMENT DESCRIPTION

3.1.- GENERAL DESCRIPTION

The 45APMA Pump is a vertical, one stage, open impeller unit, pull-out design for ease of maintenance.

Refer to the Sectional Assembly Drawing 45APMA500XE51 Rev.0 .

Water is drawn in thorough the suction flange in the bell (27) and propelled upward to the discharge head (01) by the impeller (1200). The discharge flange in discharge head (01) connects to the system piping.

The pump is supported in the vertical position by a mounting flange, which is an integral part of the discharge head (01). The pump driving motor is mounted on the motor support (17) and it is coupled to the upper shaft (1102) by means of a flexible type coupling. The pump thrust bearing assembly supports the weight of the pump rotor plus any up or down thrust that is created within the pump.

A packed stuffing box is used to seal the liquid within the pump at the point where the upper shaft (1107) protrudes thorough the stuffing box extension (02).

A lubrication system using filtered pumping fluid from discharge head (01) is used to provide lubrication to the radial bearings (0900A/B). Pump thrust bearing assembly is cooled by pumping water from discharge head (01)

3.2.- DESCRIPTION OF MAJOR PUMP COMPONENTS

3.2.1.- SUCTION BELL (27)

The suction bell directs the flow of water to the impeller. The suction bell bolts to the casing shroud (34). In its upper part rests the shroud (06) inside of which turns the impeller (1200).

3.2.2.- SHROUD (06)

The shroud (06) rests upon the suction bell (27) once the unit has been assembled. It is bolted to the casing (33).

3.2.3.- CASING (33)

The casing (33) directs the flow to the discharge head (01). It contains the diffusion vanes, which convert the speed energy of the flow coming out of the impeller into head (pressure) energy. The casing bolts to the lower inner column (34C) and diffusor .

The casing contains two bearings (0900A/B) which prevent pump lower shaft (1107) from making any radial movement.

3.2.4.- IMPELLER (1200)

The impeller (1200) is keyed and held in position on the pump lower shaft (1107) by a split ring (0000A) plus socket head capscrews / tabwashers.

The impeller is of the open type, one-piece construction, single suction, and is dynamically balanced. The impeller is housed by the shroud (06).

The impeller (1200) supplies velocity energy to the flow.

3.2.5.- CASING SHROUD (34) AND OUTER COLUMN (34A)

The casing shroud (34) and outer column (34A) are stationary parts, which houses shroud (06), casing (33), diffusor and inner columns (34C/D).

3.2.6.- INNER COLUMN (34C/D/E)

The inner column protects the shaft (1102/1104/1107) and the shaft couplings between the Casing (33) and the Motor Support (17). It enables the flow of liquid from the discharge to the suction, which serves for cooling the radial bearings (0900 A/B).

3.2.7.- DISCHARGE HEAD (01)

The discharge head (01) contains:
A. The flanged nozzle for connection to system piping.
B. The lower mounting flange for connection to the outer column (34A/B).
C. The pump baseplate.
D. The upper mounting flange for connection to the motor support (17)

Inside the discharge head there are some guide vanes, discharge head liner (19A), which are part of the motor support (17) to direct the pumping liquid towards the discharge flange.

3.2.8.- THRUST BEARING ASSEMBLY

The thrust bearing assembly is located inside the motor support (17) designed to withstand the axial thrust which is created during pump operation, as well as the rotor weight. It houses two anti-friction bearings, roller (150a) and ball (150) designs.

The thrust sleeve runner is keyed to the shaft and has its axial movement limited by the adjustable nut (2006) which bolts to the shaft. The adjustable nut (2006) is used to set the rotor lift.

3.2.9.- MOTOR SUPPORT (17)

The pump driver is mounted on the Motor Support (17) and is coupled to the upper shaft (34B) by means of a flexible type coupling. The motor support is bolted to the discharge head (01) The motor support includes the thrust bearing and the stuffing box stands as well as the discharge head liner .

3.2.10.- RADIAL BEARINGS (0900A/B)

Rubber bearings (0900 A) are mounted in the casing (33) and inner column (34C) and bearing guide (19). Rubber bearing (0900B) is located at the stuffing box extension (02)

All bearings are mounted with interference in the pump and they are lubricated by filtered pumping water.

3.2.11.- SHAFTS (1102/1104/1107)

Shafts (1102/1104/1107) are used to transmit the torque from driver to impeller (1200) and axial thrust form the impeller (1200) to the thrust bearing assembly. They are coupled by means of rigid sleeve couplings (0710b).

3.2.12.- BASEPLATE (30)

The baseplate must be grouted into the foundation and levelled to provide mounting surface to support the discharge head (01) mounting flange

3.2.13.- JOURNAL SLEEVES (0710A/B)

The journal sleeves (0710A/B) protect the shafts (1102/1104/1107) at the radial bearings areas. All journal sleeves are secured to the shafts and they are lubricated by the pumping fluid.

All journal sleeves are renewable.

4

INSTALLATION

4.1.- CHECKING LIST

This checking list must be taken into account prior to equipment installation:

1) Be sure that frequency and voltage values shown in the motor nameplate match with available ones.
2) Be sure there is not any interference between sump depth and pump setting.
3) Minimum submergence and lower water level must be checked. Minimum water level as per General Arrangement drawing no. 45APMA86XE52 Rev2 (+ 3.4 m) must be assured.
4) Cleaning sump and piping system prior to pump installation.
5) Be sure that installation equipment is the proper to handle the pump with safety.
6) Be sure all junction elements of the already assembled parts of the pump are tighten enough (some of these elements were tighten in the factory but they may be loosen during shipping).
7) Prior to the alignment, the following steps must be taken into account:

   Step 1 : Be sure that all machined surfaces (motor or pump flanges) stand clean of scales or tooth. Use wire brushes or other suitable tools to remove them.

   Step 2 : Check that the connection pipes with the pump are not forced. Flexible joints should be recommended.

   Step 3 : Check all threads. If any kind of file must be used, dismantle this part of the pump or put a rag to collect the filings to avoid risk of introducing parts in the pump.

   Step 4 : Do not contaminate stainless steel parts with carbon steel brushes, files, etc.
8) Clean all threaded elements with wire brush and solvent. Shaft ends must be also cleaned and removed of scales.
9) Lubricate all junctions with a suitable lubricant.

4.2.- FOUNDATION

- ✓ Foundation details are shown in drawing number 45APMA86XE52 Rev2.
- ✓ Soleplate drills for anchor bolts have a clearance to allow levelling and alignment during installation.
- ✓ Be sure threaded length of stud is large enough for soleplate and nut.

Following steps must be taken into account for soleplate installation:

1) Make ready packing pieces or metallic blocks (35 mm approx. thickness) between the anchor bolts, directly supported over concrete.
2) Make a preliminary levelling over these blocks, shimming if necessary. Set to concrete with grouting and clean top surface (See fig. 1). In case that levelling bolts are available, they will be used for this purpose.
3) Install baseplate (30) supporting it over the levelling blocks. Level the baseplate by means of level bolts or metallic packing pieces.
4) Having installed the baseplate (30) into position on foundation, use a machinist's level to ascertain that the mounting surface of the soleplate is properly levelled (0,25 mm/meter off-level is required. See fig. 2).

   ☑

   NOTE

   ☑

   Prior to pour grouting, be sure the concrete surface is rough enough and it is dust or sand free.

5) When baseplate (30) is correctly levelled, spout grouting slowly, being sure to fill all framing surfaces. Vibrators to be used if necessary.

☑ NOTE ☑
Grouting to be non-shrinkable type.

6) Be sure grouting is dry, check the level stands and tight the anchor bolts nuts.

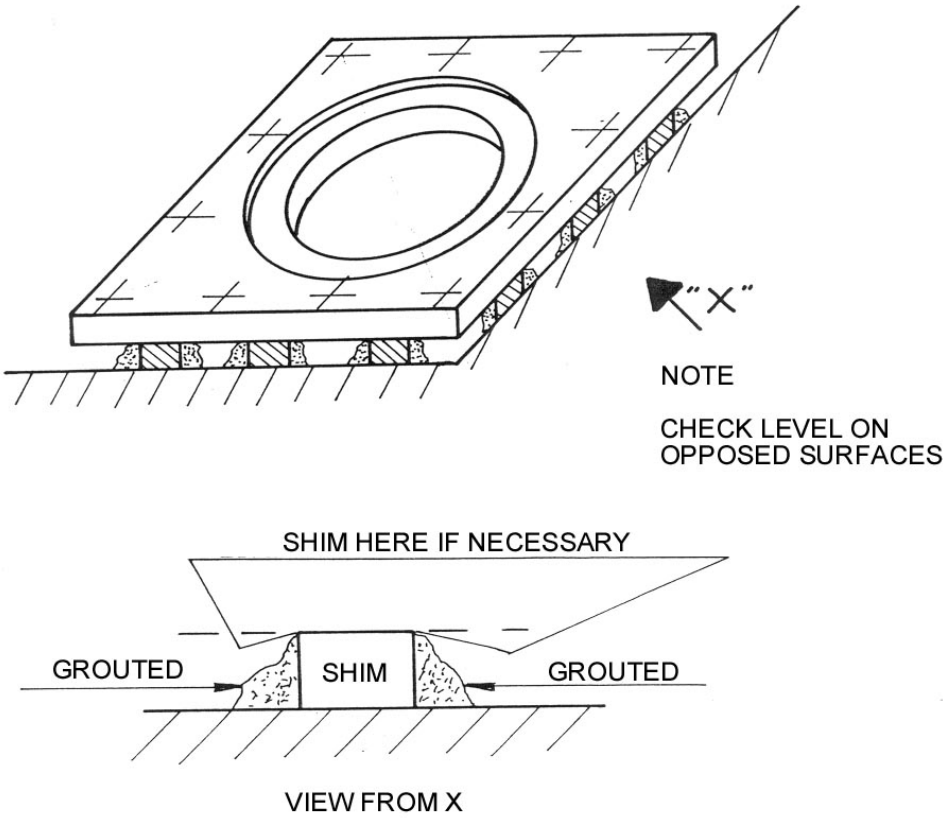
"X"
NOTE
CHECK LEVEL ON
OPPOSED SURFACES
SHIM HERE IF NECESSARY
GROUTED
SHIM
GROUTED
VIEW FROM X

Figure 1

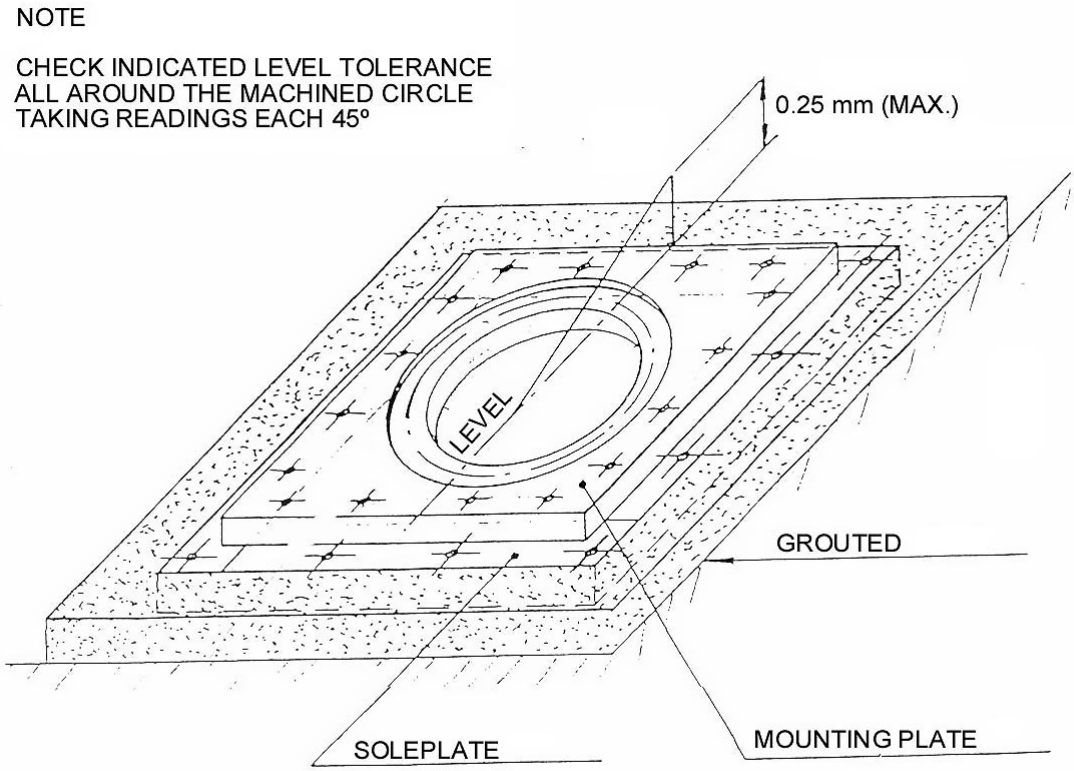
NOTE
CHECK INDICATED LEVEL TOLERANCE
ALL AROUND THE MACHINED CIRCLE
TAKING READINGS EACH 45º
0.25 mm (MAX.)
LEVEL
GROUTED
SOLEPLATE
MOUNTING PLATE

Figure 2

4.3.- INSTALLATION

☑ **NOTE** ☑

Refer to the GENERAL ARRANGEMENT drawing 45APMA86XE52 Rev2 and the CROSS SECTIONAL drawing W102439 RevA. Numbers shown thus (10) after a pump element name are part numbers and refer to the Parts List included on the Cross Sectional Drawing.

☑ **NOTE** ☑

Refer to "Torque Values" (See 4.3.5 of this section) when assembling the pump.

See packing list prior to unpacking. Unpack pump elements.

The pump has been shipped fully disassembled.

⚠ **CAUTION** ⚠

AT NO TIME SHOULD THE COMPLETE PUMPING ASSEMBLY BE ROTATED OR SUPPORTED ON THE SUCTION BELL (27).

4.3.1.- PUMP INSTALLATION

ASSEMBLY OF PUMP EXTERNAL SHELL

All flange joints to be sealed with a bead of gasket eliminator Loctite no. 515 (form in place gasket) unless otherwise expressed.

The pump external shell is composed of the following parts:

- suction bell (27)
- Casing shroud (06)
- Outer column (34A/B)
- Discharge head (01)

Follow these steps:

1) Position outer casing (33) horizontally on blocking on floor. Rig and lift suction bell (27) and fasten it to casing shroud (06) by means of twenty (20) M22 bolts.
2) Proceed the same way and assemble the outer column (34A/B) lower flange on exposed flange of outer casing (33). Use sixteen (16) M24 bolts and nuts.
3) For assembly purposes, make provision of two (2) auxiliary I-beams sized for pump weight. Using the hoists, lift the pumping assembly from blocking and

carefully manoeuvre into a vertical position until assembly is suspended vertically over the pit. Position the two (2) I-beams as shown.

☑ NOTE ☑
Make certain cables and hoists can carry the weight of the pump when raised.

4) Lower the assembly carefully into the pit until it rests on the outer column (34A/B) lateral supports.

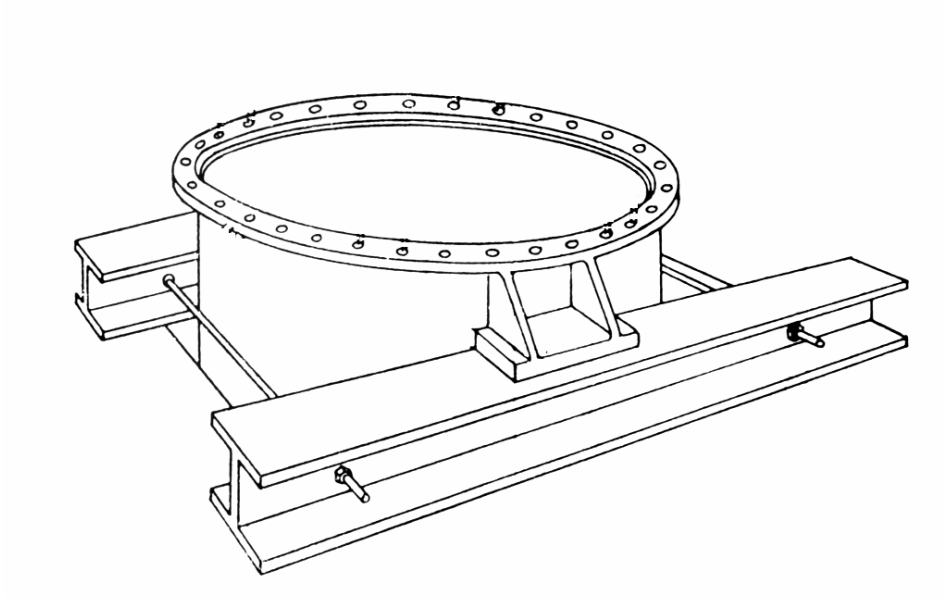

5) Using slings (not provided) rig discharge head (01) to an overhead hoist. Place the part so that lower flange is faced to exposed flange in outer column (34A/B). Fasten the two flanges by means of sixteen (16) M24 bolts

6) Lift the resulting assembly and remove the auxiliary I-beams. Lower it until discharge head (01) mounting plate is resting on baseplate (30) aligning the holes on both parts. Fasten them by using sixteen (16) M27 studs and nuts.

ASSEMBLY OF PUMP PULL-OUT ELEMENT

The pull-out element is composed of the following parts:

- Impeller (1200)
- Casing (33)
- Diffusor (06)
- Inner columns (34C/D/E)

- Bearing guide (19)
- Motor support (17) + Discharge liner assembly (19A)
- Shafts (1102/1104/1107), couplings
- Minor related parts

The pull-out element has been designed so that it can be removed from pump external shell for maintenance purposes.

The pumping element (impeller (1200) + casing (33) + diffusor (06) + lower shaft (1107) + lower inner column (34C)) has been shipped assembled.

1) Install slings around the pumping element and rig to an overhead hoist. Manoeuvre assembly into horizontal position and place on blocking on floor.
2) Make up lower intermediate shaft coupling joining shafts (1104/1107):

   Position coupling key (2119A) on its keyway on lower end of intermediate shaft (1104) and slide coupling sleeve (0710B) upwards. Face lower end of intermediate shaft (1104) against exposed end of lower shaft (1107). Position coupling split ring (0000B) and the other coupling key (2119A) on its keyway and slide back the coupling sleeve (0710B). Fix it by means of screws.
3) Fasten lower flange of intermediate inner column (34D) to upper flange of lower inner column (34C)
4) By the exposed end of intermediate shaft (1104) , slide bearing guide (19) through taking care not to damage bearing (0900A) or/and sleeve (0710A). By means of studs and bolts, fasten it to exposed flange of intermediate inner column (34D).
5) Proceed the same way as in steps 2 and 3 so that upper inner column (34E) and upper shaft (1102) are added to the pull-out element.

ASSEMBLY OF COMPLETE PUMP

1) Install slings around the pull-out element and rig to an overhead hoist. Manoeuvre assembly into vertical position and carefully lower it until it the impeller shroud (06) is resting on taper portion of suction bell (27).

IMPORTANT: The anti-rotation lug on outer surface of impeller shroud (06) must be placed between the two (2) anti-rotation lugs on inner surface of casing shroud (33) as shown on picture.

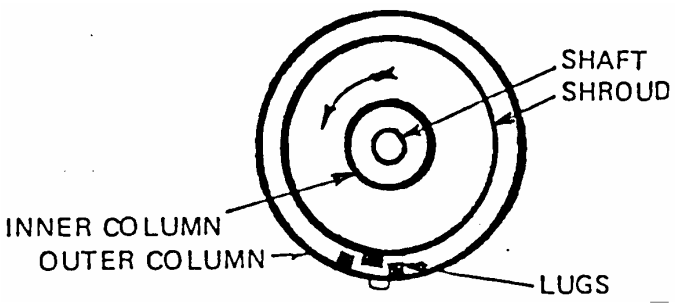

2) Assemble stuffing box extension (02) to motor support (17) by means of studs and nuts. The joint is sealed by means of a flat gasket. The stuffing box must be placed so that the two connections, drain and external injection tap, are faced against the two windows on motor support (17). See 4.3.2 for packing installation information.

3) The thrust bearing assembly is shipped fully assembled. Bolt it to intermediate flange of motor support (17) so that the three side connections, cooling water inlet, cooling water outlet and oil sight level are positioned in line with their corresponding holes in motor support (17).

4) Place gasket on exposed flange of discharge head (01).

5) Rig motor support (17) to an overhead hoist and lower it until its lower flange is resting on discharge head (01) upper flange. Take care not to damage thrust bearing assembly or stuffing box bearing (0900B).

   NOTE: The flinger is positioned between the thrust bearing assembly and stuffing box extension as shown on cross sectional drawing W102439 RevA

   The angular position of the motor support (17) is fixed by means of a locating pin so that the discharge liner (19A) integral with motor support (17) is facing discharge flange. Bolt motor support (17) to discharge head (01).

6) Position key inside its keyway in thrust runner . By the exposed end of upper shaft (1102), slide adjusting nut (2006). Thread and bolt to thrust runner .

7) Using two (2) M20 bolts on stuffing box (02) flange, tight the upper inner column (34E).

4.3.2.- STUFFING BOX AND PACKING INSTALLATION

Properly packed stuffing boxes are necessary for efficient pump operation.

CAUTION

CARE MUST BE TAKEN WHEN TIGHTENING THE GLAND. PACKING TOO TIGHT MAY LEAD ON BURNING. FURTHERMORE, SHAFT SLEEVE CAN BE SCORED AND EVEN THE ROTOR MAY BE SEIZED.

For the packing installation on the stuffing box extension, follow these steps:

1) Install all the rings of packing (1320).

NOTE

Install one ring of stuffing box packing (1320) in the box at a time, making sure it is properly seated.

2) Stagger the joints of succeeding rings (1320). When the last ring is in place, assemble the gland (1500) halves and pull up the nuts evenly until snug. Then back off the nuts and retighten FINGER TIGHT.

NOTE

Taking up the gland nuts can control the stream of leakage following pump start up. It is suggested that this is done slowly, one flat at a time until satisfactory leakage or lubrication has been attained.

CAUTION

PACKING GLANDS (1500) MUST NEVER BE TIGHTENED TO THE POINT WHERE LEAKAGE FROM THE PACKING IS STOPPED. A SMALL AMOUNT OF LEAKAGE IS REQUIRED FOR LUBRICATION OF THE PACKING. SHUTTING OFF LEAKAGE FLOW FROM THE PACKING (1320) WILL RESULT IN BURNED PACKING, SCORED SHAFT AND POSSIBLE ROTOR SEIZURE.

NOTE

When a new packing is installed wait for a week of operation to definitively tight the gland, to ensure the suitable leak through the packing.

3) Check pump levelling over stuffing box (02) top surface, shimming if necessary. Eventually tighten the bolting between the soleplate (30) and the discharge head (01).

4.3.3.- MOTOR INSTALLATION AND ASSEMBLY OF THE MOTOR TO PUMP FLEXIBLE COUPLING

4.3.3.1.- PRE-INSTALLATION INSPECTION

Upon receipt of the coupling:

1) Check all parts for possible shipping damage or shortages.
2) Immediately notify Flowserve if any part is damaged or missing.

Use reference drawing to identify parts and their relative position in the installation.

4.3.3.2.- INSTALLATION OF COUPLING

Follow Manufacturer's instructions included in chapter 7, Maintenance.

4.3.3.3.- CHECKING OF MOTOR / PUMP DIRECTIONS OF ROTATION

WARNING

The motor to discharge head flange bolting must be installed before shortly energising motor to check direction of rotation.

☑ **NOTE** ☑

The combined resonant frequency of the pump/motor assembly is based upon a rigid foundation/support system (i.e. one that provides no lateral deflection to the combined assembly). Motors should be designed so that a mass equivalent to 10% of the motor weight can be added to the top of the motor in order to tune the system if required.

Follow the following steps:

1) See rotation direction(s) indicated on the pump-motor rotation plates.
2) Shortly energising the motor and determinate its direction of rotation.
3) Switch motor leads if necessary to achieve proper direction of motor rotation.

WARNING

THE MOTOR ROTATION MUST BE CHECKED BEFORE MAKING UP COUPLING. BE SURE PUMP AND MOTOR ROTATION COINCIDING BEFORE START UP. DAMAGE TO THE EQUIPMENT AND PERSONAL INJURY COULD RESULT FROM WRONG UNIT ROTATION.

4.3.4.- ROTOR SETTING

The correct pump rotor setting is shown on the Rotor Setting Plate.

After the pump installation, In principle the impeller (1200) rests directly on the shroud (06). It is necessary to lift the rotor to achieve the desired distance between both elements.

Step 1

Install indicator bracket on fixed thrust bearing body surface and arrange indicator so that its tip is located on the shaft end.

Determine that the pump is in the full down position and set the radial indicator at "ZERO".

Turn shaft nut (2006) until the rotor is lifted **1.5 mm** approx. Then fix shaft nut to thrust runner by means of bolts.

☑ **NOTE** ☑

If the coupling bolt holes do not line up when the adjusting nut (2006) has been backed-off the desired distance from motor half coupling, continue turning the adjusting nut counter clockwise to reach the nearest bolt hole.

4.3.5.- BOLTING TORQUE VALUES

PARTS	SIZE	TORQUE Nm
SUCTION BELL (27) TO CASING SHROUD (06)	M22	625
CASING SHROUD (06) TO OUTER COLUMN (34A/B)	M24	830
OUTER COLUMN (34A/B) TO DISCHARGE HEAD (01)	M24	830
DISCHARGE HEAD (01) TO BASEPLATE (30)	M27	1180
DISCHARGE HEAD (01) TO MOTOR SUPPORT (17)	M24	830
IMPELLER (1200) TO LOCK COLLAR (0852)	M18	330
IMPELLER SHROUD (06) TO CASING (33)	M27	1180
CASING (33) TO DIFFUSOR (06)	M22	625
CASING (33) TO INNER COLUMN (34C/D/E)	M16	235
OUTER COLUMN (34A/B) TO INNER COLUMN (34C/D/E) OR BEARING GUIDE (19)	M20	460
STUFFING BOX EXTENSION (02) TO DISCHARGE HEAD (01)	M20	460
MOTOR TO MOTOR SUPPORT (17)	M30	1615
THRUST BEARING HOUSING TO MOTOR SUPPORT (17)	M16	235
ANCHOR BOLTS	M36	2100

Torque values listed below are selected to achieve the proper amount of pre-stress in the threaded fastener. Maintenance personnel must insure that threads are in good condition (free of burrs, galling, dirt, etc) and that commercial thread lubricant is used. Torque should be periodically checked to assure that it is at the recommended value.

5

START-UP AND OPERATION

5.1.- OPERATING PRECAUTIONS

WARNING

The unit must not be operated unless the wire "hand-hole" covers have been installed in the windows of the discharge head. Failure to observe this warning could result in personal injury to operating personnel.

WARNING

FOR SATISFACTORY OPERATION, A WATER HAMMER ANALYSIS SHOULD BE MADE BEFORE STARTING.

Special considerations and provisions must be made to avoid the chance of water hammer during start up operation. Various installations have employed one of the following start up procedures and successfully avoided damaging water-hammer.

- Start and shutdown using a two-speed motor valve operator with a 15 second start and 45 second closure interlocked with motor to trip at 30º
- Pre-open valve to 30º. Start motor and either continue to open valve (preferred) or hold to fill system, shutdown with motor tripping at 30º, 45 second minimum valve timing.
- Fully primed system. Start pump and valve simultaneously. Maximum 30 second valve stroke.

Never operate the pump for extended periods of time against a closed discharge valve.

CAUTION

Discharge valves to be closed on shutdown to prevent possible reserve rotation of the pump.

WARNING

The pump should not be operated under prolonged or severe cavitating conditions.

WARNING

Do not wipe down in the vicinity of rotating parts. If unusual noise or vibration occurs, stop the pump as soon as possible.

CAUTION

Avoid sustained pump operation below **3000** M^3/H

CAUTION

Never start pump while pump column is unprimed and under vacuum. Vacuum within the pump may occur during shutdown due to flow reversal in the system. Allow sufficient time prior to restart to permit air to enter pump. An air release valve should be located between the pump and the discharge valve.

THERE ARE OTHER SEVERAL SCHEMES WHICH MAY WORK EQUALLY AS WELL DEPENDING UPON THE SYSTEM DESIGN. THE SCHEME WHICH IS SELECTED SHOULD BE REVIEWED BY FLOWSERVE PRIOR TO BEING ENACTED.

FLOWSERVE RECOMMENDS THAT CUSTOMER INSTALL INSTRUMENTATION TO CHECK SYSTEM RESISTANCE. VALVE SETTING CHANGES MAY BE REQUIRED DUE TO SYSTEM VARIATIONS UNDER NORMAL OPERATING CONDITIONS.

5.2.- BEARING LUBRICATION WATER SYSTEM

THE PUMP USES A LUBRICATION SYSTEM TAKING PRODUCT WATER FROM A CONNECTION IN DISCHARGE HEAD WHICH IS FILTERED BY A CYCLONE AND THEN INJECTED TO A TAP IN THE STUFFING BOX EXTENSION. THIS SYSTEM IS ALSO USED TO PROVIDE COOLING WATER TO THE THRUST BEARING ASSEMBLY.

5.3.- INITIAL STARTING AND STARTING AFTER OVERHAUL

1)Be sure driver has been prepared for operation in accordance with motor manufacturer's instructions.

2)Check all main and auxiliary piping making certain they are connected properly.

NOTE

Piping must be independently supported and must not be drawn into position with flange bolting.

NOTE

If an expansion joint is used, employ tie rods of adequate strength (i.e. size for 1½ times shut-off pressure).

3) Check the coupling has been correctly installed according to manufacturer's instructions.

4) Ensure pump and piping is clean.

5) Check the thrust bearing assembly has been filled with oil to its appropriate level of 90 mm to 105 mm from thrust bearing housing base. Use ISO VG32 oil. Approximate oil capacity is 1.75 litre.

6) Be sure discharge valve is in correct "start-up" position.

7) Be sure the sump is free of rocks, mud and other debris which could cause damage to the pump and system.

8) Check all bolting for tightness.

9) Check pump rotation by starting pump momentarily. **The direction of rotation is counter clockwise when facing pump shaft at coupling end**. Note the pump coasts to a gradual stop.

10) Close motor circuit breaker.

CAUTION

If pump stops abruptly on release or start switch, investigate for pump binding. Take necessary remedial action before restarting operation.

11) Start the pump from the local control panel. The pump logic opens the discharge valve at the correct opening rate as the pump runs up to speed.

12) Perform the operation checks.

5.4.- NORMAL START UP

THE STARTING PROCEDURE TO BE FOLLOWED FOR NORMAL START UP IS THE SAME AS THAT FOR INITIAL STARTING EXCEPT THAT THE STEPS 1 THROUGH 5 AND THE STEP 9 DO NOT HAVE TO BE REPEATED.

5.5.- OPERATING CHECKS

WARNING

Before attempting any inspection or repair on the pump, the driver controls must be in the "off" position, locked and tagged to prevent injury to personnel performing service on the pump.

WARNING

Do not attempt any maintenance, inspection, repair or cleaning in the vicinity of rotating equipment. Such action could result in injury to operating personnel.

WARNING

Do not wipe down in the vicinity of rotating parts. If unusual noise or vibration occurs, secure the pump as soon as possible.

SYSTEMATIC CHECKS FOLLOWING START-UP OPERATIONS ARE A FACTOR IN AVOIDING COSTLY SHUTDOWNS. IMMEDIATELY AFTER START-UP, AND FREQUENTLY DURING RUNNING, CHECK THE FOLLOWING:

1) The discharge pressure gauge to see that it indicates the proper operating condition(s). If any time the discharge gauge should drop to zero, shut down the pump immediately.

   The discharge gauge should show an increase in the pressure as the pump picks up speed. If it does not, shut down the pump and locate the cause of the trouble.

2) The pump capacity by means of any system flow meter.

CAUTION

Avoid sustained pump operation below **3000** M^3/H

3) For unusual noises.
4) Motor amperage and operating temperature. Refer to Motor Instructions.
5) The leakage through the stuffing box.
6) Nominal injection flow to the stuffing box is 2 m3/h (33.3 litre/min). Flow shall never be below **1.3 m3/h** (22 litre/min)

CAUTION

Packing gland (1500) must never be tightened to the point where leakage from packing (1320) is stopped (no water flow). A small amount of liquid flow is needed for packing lubrication. Bearing lubrication must be maintained all running time. Shutting off leakage flow from the packing will result in burned packing and a scored shaft.

5.6.- SECURING THE PUMP

1) Trip the motor circuit breaker.

2) Preserve the equipment from freezing.

CAUTION

When the pump is exposed to freezing temperatures while not in operation, care should be taken to prevent any liquid from freezing within the pump.

CAUTION

When the motor is exposed to freezing temperatures while not in operation, take protective measures to safeguard motor as outlined in motor instructions.

6

TROUBLE SHOOTING

TROUBLE	Cause	Remedy
Insufficient capacity and/or pressure.	Speed too low or suction pressure less than required.	Check power supply for correct voltage.
	Incorrect direction of rotation.	Re-connect motor leads.
	Foreign material in impeller and/or casing diffusing vanes.	Dismantle pump and remove any foreign material.
	Mechanical defects: ♦ Impeller damaged. ♦ Sheared impeller keys.	Dismantle pump and correct.
	Foreign material in suction line.	Dismantle suction line and remove foreign material.
	Excessive amount of air or vapour in the fluid.	Check suction system for air leakage and correct vent air. Tighten flange bolts.
Pump vibrates.	Loose mounting or coupling bolts.	Tighten bolts.
	Broken or damaged coupling.	Inspect and replace it.
	Foreign material in impeller causing unbalance.	Dismantle pump and remove any foreign material.
	Mechanical Defects: ♦ Shaft bent. ♦ Radial bearings worn.	Dismantle pump and replace part or parts causing vibration.
	Misalignment Air or gas in liquid	Check alignment and correct Vent air and check suction for leaks. Tighten flange bolts.
Pump overloads driver.	Speed too high.	Check power supply for correct frequency.

	Pump bearings seize or rotating element binds.	Dismantle pump and replace part or parts causing seizure or binding.
Pump stops abruptly.	Pump binding at running fits.	Dismantle pump and correct.
Stuffing box overheats.	Stuffing box packed too tight.	Repack stuffing box with new packing.
	Insufficient gland leakage.	Loosen gland nuts and retighten finger tight or until proper leakage is obtained.

TROUBLE	Cause	Remedy
Excessive gland leakage.	Packing not seated.	Gland not evenly tightened. Loosen nuts and tighten evenly.
	Worn packing.	Replace packing.
Pump is noisy.	Cavitation.	♦ Check that pump is primed. ♦ Check for high suction temperature. ♦ Check for obstructions in suction line.
	Loose parts.	Tighten or replace defective parts.
	Noise in driver.	Check driver with stethoscope. Refer to motor Instructions Manual for trouble shooting.
Pump loses prime after starting.	Insufficient water supply.	Check for proper liquid level.
	Excessive amount of air or vapours in liquid.	Check suction system for air leakage and correct.
	Broken or damaged coupling.	Inspect and replace it.
	Clogged impeller.	Dismantle pump and correct.

7

MAINTENANCE

7.1.- GENERAL PREVENTIVE MAINTENANCE

Avoid serious or troublesome problems by systematic maintenance checks. Study the "TROUBLE SHOOTING CHART" (Section 6) as an aid to your maintenance program. Study also the maintenance recommendations included in the motor Instructions Manual, supplied besides this pump Manual.

7.1.1.- PERIODIC INSPECTION

A monthly inspection for every unit is suggested. Performance variations, noise and vibration levels changes must be checked during the inspection.

Loose bolting, dirtiness and corrosion on the piping system must be also checked. Clean and repaint all rusty surfaces.

7.1.2.- PUMP LUBRICATION

Stuffing box and radial bearings to be lubricated by pumping fluid. Thrust bearing is oil lubricated. Refer to paragraph 7.4. for thrust bearing maintenance information.

7.1.3.- STUFFING BOX AND PACKING INSTALLATION

Properly packed stuffing boxes are necessary for efficient pump operation.

CAUTION

CARE MUST BE TAKEN WHEN TIGHTENING THE GLAND. PACKING TOO TIGHT MAY LEAD ON BURNING. FURTHERMORE, SHAFT SLEEVE CAN BE SCORED AND EVEN THE ROTOR MAY BE SEIZED.

For the stuffing box installation on the discharge head, follow these steps:

4) Install gasket (1300) on the discharge head (01). Slide stuffing box extension (02) onto the upper shaft (1102) until it seats on the discharge head (01). Fix it by means of bolts.

   The lower portion of stuffing box, with the bearing (0900B) fitted in it, will fit into the discharge head (01). Be careful do not score the upper shaft (1102) or the stuffing box shaft sleeve (0710B) or bearing (0900B) when sliding the stuffing box extension into discharge head.

5) Install all the rings of packing (1320).

NOTE

Install one ring of stuffing box packing (1320) in the box at a time, making sure it is properly seated.

6) Stagger the joints of succeeding rings (1320). When the last ring is in place, assemble the gland (1500) halves and pull up the nuts evenly until snug. Then back off the nuts and retighten FINGER TIGHT.

NOTE

Taking up the gland nuts can control the stream of leakage following pump start up. It is suggested that this is done slowly, one flat at a time until satisfactory leakage or lubrication has been attained.

CAUTION

PACKING GLANDS (1500) MUST NEVER BE TIGHTENED TO THE POINT WHERE LEAKAGE FROM THE PACKING IS STOPPED. A SMALL AMOUNT OF LEAKAGE IS REQUIRED FOR LUBRICATION OF THE PACKING. SHUTTING OFF LEAKAGE FLOW FROM THE PACKING (1320) WILL RESULT IN BURNED PACKING, SCORED SHAFT AND POSSIBLE ROTOR SEIZURE.

NOTE

When a new packing is installed wait for a week of operation to definitively tight the gland, to ensure the suitable leak through the packing.

7) Check pump levelling over stuffing box (02) top surface, shimming if necessary. Eventually tighten the bolting between the soleplate (30) and the discharge head (01).

7.2.- DISMANTLING PROCEDURE

Your pump is a precision machine. Take precaution to avoid damage or even slight burrs to the shaft bearings areas, as well as any other machined surface when dismantling your pump.

WARNING

Before attempting any inspection or repair on the pump, the motor controls must be in the “off” position, locked and tagged to prevent injury to personnel service on the pump.

WARNING

Do not attempt maintenance, inspection, repair or cleaning in the vicinity of rotating equipment. Such action could result in injury to operating personnel.

NUMBERS SHOWN THUS (BETWEEN BRACKETS) ARE PART NUMBERS AND REFER TO THE PARTS LIST INCLUDED ON THE SECTIONAL ASSEMBLY DRAWING.

Follow these steps:

Take care on following points:

A) NUMBER OF EYEBOLTS USED TO LIFTING EACH PUMP SUBSET.

b) Setting of "I" beams to support pump subset.

1) Break and tag motor circuit breaker. Disconnects the electric leads and service lines.
2) Remove wire hand-hole covers from "windows" in support head.
3) Disconnect any auxiliary piping that will interfere with dismantling.
4) Drain oil inside thrust bearing housing by removing the oil plug on its base.

   CAUTION: Oil must be allowed to cool before draining.
5) Disconnect the pump-motor coupling.

☑ **NOTE** ☑

Make sure the coupling bolting is removed from the driver half coupling.

6) Unfasten motor hold down bolts. Rig motor and lift. Place it on blocking on floor.
7) Remove pump half coupling following manufacturer's instructions.
8) Turn the adjusting nut (2006) counter clockwise until the rotor is resting on its lower position. Loose it and slide it out through the upper shaft (1102).
9) Remove the two (2) M20 bolts on stuffing box flange holding upper inner column (34E).
10) Loose the flinger
11) Unfasten bolting joining motor support (17) to discharge head (01). Rig and lift motor support (17) and carefully slide it upwards taking care not to damage shaft (1102), stuffing box extension bearing (0900B) or shaft sleeve (0710B). Place it on blocking on floor. Discard gasket between motor support (17) and discharge head (01).
12) Rig exposed flange of upper inner column (34E) to an overhead hoist and lift the entire pumping element. Position horizontally on blocking on floor.
13) Unfasten bolting joining upper inner column (34E) to bearing guide (19) and slide out upper inner column (34E).

14) Remove setscrews holding coupling sleeve (0710B), slide coupling sleeve towards upper shaft (1102). Remove split ring (0000B) and the two keys (2119A). Place upper shaft (1102) on blocking on floor.

15) Unfasten bolting joining bearing guide (19) to intermediate inner column (34D). Slide out bearing guide (19) taking care not to damage bearing (0900A) or shaft sleeve (0710A).

16) Unfasten bolting joining intermediate column (34D) to lower inner column (34C) and slide out intermediate inner column (34D).

    NOTE: Exposed shaft must be supported on blocking.

17) Remove setscrews holding coupling sleeve (0710B), slide coupling sleeve towards intermediate shaft (1104). Remove split ring (0000B) and the two keys (2119A). Place upper shaft (1102) on blocking on floor.

18) Unfasten bolting joining diffusor (56) to pump casing (33) and slide it out.

19) Unfasten bolting joining lower inner column (34C) to pump casing (33) and slide lower inner column (34C) out of the assembly. Take care not to damage bearing (0900A) or shaft sleeve (0710A).

20) Continue dismantling following pumping element dismantling procedure.

7.2.1.- PUMPING ELEMENT DISMANTLING

Pumping element includes the impeller shroud (06), the casing (1), the lower shaft (1107) with the impeller (1200) and minor related parts.

For dismantling, follow these steps:

1) Install two eyebolts in exposed upper flange of casing (33) and rig to overhead hoist. Install choker cable around impeller shroud (06) and rig to auxiliary hoist.

2) Using both hoists, lift the pumping element from blocking and carefully manoeuvre into a vertical position until assembly is suspended vertically from the rigging attached to the eyebolts in casing upper flange.

CAUTION

At no time should the pump assembly be rotated on the impeller shroud (06) or casing (33).

3) Remove choker cable from impeller shroud (06). Carefully lower pump assembly until impeller shroud (06) is resting on blocking on the floor.

   Do not unhook the overhead hoist from eyebolts in casing (33) upper flange.

4) Remove the casing (33) to impeller shroud (06) bolting.

5) Using the rigging attached to casing (33) upper flange, lift and remove casing (33). Place casing (33) in a vertical position on blocking on the floor

NOTE

Take care not to damage radial bearings (0900A) or journal sleeves (0710A) when removing casing.

6) Remove lower pump shaft (1107) and impeller (1200) as a unit from the impeller shroud (06).

7) Block up the impeller (1200). Remove the four socket head capscrew/lockwashers from the split ring (0000).

   Place a block of wood over the top of the lower pump shaft (1107) and tap until lock collar (0852) is completely clear of the impeller (1200).

   Remove the lock collar (0852) and withdraw the lower pump shaft (1107) from the impeller (1200).

   Place lower shaft (1107) on stands or support and block to prevent rolling.

8) Release the setscrews in the journal sleeves (0710A) and remove journal sleeves from the impeller end of pump shaft by tapping softly on one side. Remove journal sleeves keys (2116).

9) Remove in the same way the stuffing box journal sleeve (2116) and bearing sleeves (0710A) from the upper (1102) and intermediate (1104) shafts, respectively. This completes dismantling.

7.3.- INSPECTION OF PARTS

Whenever a pump maintenance dismantle is carried out, do not forget:

1. Scrape all gasket surfaces free of old gasket eliminator material before reassembling.
2. Renew “O” rings and flat gaskets, during reassembling procedure.

7.3.1.- JOURNAL SLEEVES

Inspect journal sleeves (0710A/B). If journal sleeves are worn, they can be removed by releasing the allen setscrews in each journal sleeve and sliding sleeve from its respective shaft. Install new journals sleeves onto their respective shafts and locate each sleeve on its key.

Install new setscrews and apply "Loctite" (Screw Lock Grade) to the threads.

Stake the setscrew threads.

☑ NOTE ☑

If the used holes for the journal sleeve setscrews cannot be located when installing the sleeves (0710A/B) on the pump shafts (1102/1104/1107), the new holes will have to be drilled to spot the shaft to ensure securing of the journal sleeves (0710A/B) in their proper location with setscrews.

7.3.2.- RADIAL BEARINGS

EACH BEARING (0900A/B) IS LOCKED IN POSITION BY A PRESS FIT.

Bearings (0900A/B) can be removed by pressing the old bearing out of its respective fit. Press new bearing into fit.

CAUTION

When installing the “*Cutless Rubber Bearings*” (0900A/B) do not chill to less than –17.8ºC, as the rubber portion of the bearing will detach from its respective metal backing.

7.3.3.- STUFFING BOX PACKING (1320)

Check possible damage in shaft. Verify circulating piping are not choked. Clean stuffing box inside surface.

Replace packing and tight bolting. Packing not to be so tight that it stops flow of water. A small amount of liquid flow is needed to packing lubrication.

7.4.- THRUST BEARING ASSEMBLY

The thrust bearing assembly consists of a ball bearing and a taper roller bearing. This combination has been studied in order to stand the hydraulic up and down thrust as well as the complete rotor weight. It is forced oil lubricated and water cooled from pump discharge.

Oil to be used is a good mineral grade ISO VG22 with VI (viscosity index) >= 85. Change interval is 3000 h.

Oil level must be periodically checked. Refill if necessary. Approximate oil fill is 1.75 litres

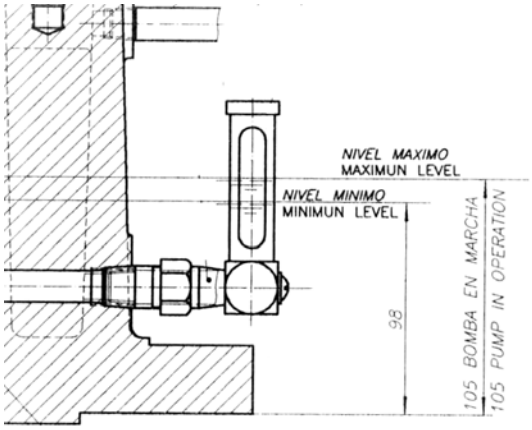

7.5.- WEAR RINGS

IF IMPELLER WEAR RING (0000) AND CASING WEAR RING ARE WORN, THEY CAN BE REMOVED BY RELEASING THE FOUR (4) M6 ALLEN SETSCREWS IN EACH RING AND PRESSING THE RING OUT OF ITS FIT. INSTALL NEW RINGS ONTO THEIR RESPECTIVE HOUSINGS. INSTALL NEW SETSCREWS AND APPLY "LOCTITE" (SCREW LOCK GRADE) TO THE THREADS. STAKE THE SETSCREW THREADS.

7.6.- RE-ASSEMBLY AND RE-INSTALLATION OF THE PUMPING ARRANGEMENT

Re-assembly and re-install the complete pumping arrangement following the dismantling procedure (see Section 7.2.) in backward sequence.

ANNEXE

BOLTING TORQUE VALUES

PARTS	SIZE	TORQUE Nm
SUCTION BELL (27) TO CASING SHROUD (06)	M22	625
CASING SHROUD (06) TO OUTER COLUMN (34A/B)	M24	830
OUTER COLUMN (34A/B) TO DISCHARGE HEAD (01)	M24	830
DISCHARGE HEAD (01) TO BASEPLATE (30)	M27	1180
DISCHARGE HEAD (01) TO MOTOR SUPPORT (17)	M24	830
IMPELLER (1200) TO LOCK COLLAR (0852)	M18	330
IMPELLER SHROUD (06) TO CASING (33)	M27	1180
CASING (33) TO DIFFUSOR	M22	625
CASING (33) TO INNER COLUMN (34C/D/E)	M16	235
OUTER COLUMN (34A/B) TO INNER COLUMN (34C/D/E) OR BEARING GUIDE (19)	M20	460
STUFFING BOX EXTENSION (02) TO DISCHARGE HEAD (01)	M20	460
MOTOR TO MOTOR SUPPORT (17)	M30	1615
THRUST BEARING HOUSING TO MOTOR SUPPORT (17)	M16	235
ANCHOR BOLTS	M36	2100

TORQUE VALUES LISTED ABOVE ARE SELECTED TO ACHIEVE THE PROPER AMOUNT OF PRE-STRESS IN THE THREADED FASTENER. MAINTENANCE PERSONNEL MUST INSURE THAT THREADS ARE IN GOOD CONDITION (FREE OF BURRS, GALLING, DIRT, ETC) AND THAT COMMERCIAL THREAD LUBRICANT IS USED. TORQUE SHOULD BE PERIODICALLY CHECKED TO ASSURE THAT IT IS AT THE RECOMMENDED VALUE.

Data sheets

Project:

LAVRION V-CCPP
DMKT 11 21 302

Title: Pump Data Sheet

Circulating Water Pumps (5PAC10/20 AP001)

Supplier Document No:	-	Issue: 3
KKS Document No:	5-PAC-MHP-FPD-222	
Purpose of issue: Final		Date: 31/05/05

00-Y-X-10302-F3/I Issue 1

Prepared: MM

Reviewed: JM

Approved: CV

EMPRESARIOS AGRUPADOS	PROJECT:	Document Nº : 413-5-S-M-21300		
	C.C. LAVRION V	Sheet Nº:		
		REV	By	Date
		1	JJM	21/03/2004
	CIRCULATING WATER PUMP	2	MM	22/04/2004

1 GENERAL

ITEM (KKS)	5PAC10/20-AP001	Supplier	FLOWSERVE
Service	Cooling water	Model	45APMA
Quantity	2	Type	Vertical wet pit

2 DESIGN CONDITIONS

Fluid		Barometric absolute pressure (mbar)	1 013.3
Type	Sea water	Ambient temperature (ºC)	15 ºC
Temperature (max / normal/ min) (ºC)	26 ºC / 22 ºC / 11.5 ºC	Relative humidity (%)	60 %
Viscosity (Cst)	0.02 Cst @ 22 ºC	Liquid level (max / normal/ min) (m) **(1)**	/ / Pending **(6)**
Density (kg/m3)	1 030.8 kg/m3 @ 22 ºC	Sump depth (m) **(2)**	Pending **(6)**
Vapor absolute pressure (bar)	0.0264 bar @ 22 ºC	Design gauge pressure (bar)	3 bar
Suspended solids (mg/l)	4,0 mg/l	Design temperature (ºC)	30 ºC
Location (Outdoor/ Indoor)	Outdoor	Seismic qualification	A=0,16 g; **Y**=1,3 (Greek Code)

SPECIFICATION		SUPPLIER			
Operating conditions		Shut-off Condition	Minimum Flow	Operating Point	Run-out
Flow	Q oper. = 13 430 m^3/h	0	11410	13450	16500
Total Head @ normal liquid level	TDH oper.= 12.5 m	25,9	14,5	12,5	7,1
Gauge pressure at pump discharge flange	(bar)	2,37	1,18	0,96	0,1
Pump efficiency	(%)	N/A	84,2	87	80
NPSH required **(3)**	(m)	N/A	8	7,1	4
Submergence required **(4)**	(m)	N/A	3,3	3,4	3,6
Pump brake horsepower	(kW)	N/A	551	542	232
NPSH avail. (at minimum liquid level) **(3)**	(m)	13			
Submergence avail. (at minimum liquid level) **(4)**	(m)	3,6			
Speed	600 r.p.m.	500 r.p.m			
First critical speed	(r.p.m.)	>735			
Maximum allowable reverse speed	(r.p.m.)	625			
Maximum achievable reverse speed	(r.p.m.)	500			
Maximum operation time at shut-off condition	(s)	NOT RECCOMMENDED			
Pump rotation **(5)**	CW or CCW	CCW			
Noise level 1 m away from the pump	82 dBA	82dBA			

3 CONSTRUCTION FEATURES

Number of stages		1	
Pump lenght measured from baseplate (m)		L (pump) =	L (pump + bell) =
Pump Intake Dimensions (by ANSI/HI 9.8)	Distance from the back wall to the pump bell centerline (dimension **B**) (mm)	1200	
	Distance between the inlet bell and floor (dimension **C**) (mm)	480	
	Inlet bell outside diameter (dimension **D**) (mm)	1600	
	Distance from pump inlet bell centerline to the through-flow traveling screen (dimension **Y**) (mm)	>12100	

	Position	Flange class	Faces	Position	Size	Class/ Rating	Faces
Discharge Nozzle	☑ Above soleplate **(6)** ☐ Below soleplate	☐ ANSI ☑ AWWA	☑ FF ☐ RF	☑ Above soleplate ☐ Below soleplate	*referred to mean water level +0,0m 48* AWNA		☑ FF ☐ RF

Impeller			☐ Enclosed	☑ Semiopen	☐ Open
			Dmax= 1040	Dactual=969	Dmin= 915
Shaft sealing	☐ Mechanical seal ☑ Packing	☑ Pumped fluid ☐ Fluid from external source	☐ Mechanical seal ☑ Packing	Make: Flushing Nº :	☑ Pumped fluid ☐ External Q= l/min PS = **m**m p = bar g. T= ºC
Bearings			☑ Line shaft	☐ Oil ☐ Grease	☑ Pumped fluid ☐ External fluid — INTERNAL FROM PUMP
			☑ Thrust	☑ Oil ☐ Grease	☐ Pumped fluid ☐ External fluid — N/A
Arrangement	☑ Pull out ☐ Non pull out		☑ Pull out ☐ Non pull out	Inner colum	☑ Yes ☐ No

Auxiliary connections	Denomination	Type	Size	Denomination	Quantity	Type	Size
	☑ Vent	☐ Plugg ☑ Connection		☑ Vent		☐ Plugg ☑ Connection	
	☑ Manometer	☐ Plugg ☑ Connection		☑ Manometer		☐ Plugg ☑ Connection	

Anchor bolts	☑ Information	☐ Supply	☑ Information	☐ Supply
Coupling	☑ Flexible ☐ Rigid	Spacer ☑ Yes ☐ No	☑ Flexible ☐ Rigid	Spacer ☐ Yes ☐ No
Baseplate	☑ Driver pedestal/ Head	☑ Soleplate	☑ Driver pedestal/ Head	☑ Soleplate

4 INSTRUMENTS AND ACCESSORIES OF PUMP

One (1) automatic air venting valve	INCLUDED
One (1) manometer at the pump discharge	INCLUDED
Two (2) vibration transmitters on thrust bearing	INCLUDED
One (1) double PT100 on thrust bearing	INCLUDED
	INCLUDED

EMPRESARIOS AGRUPADOS	PROJECT: C.C. LAVRION V CIRCULATING WATER PUMP	Document Nº : 413-5-S-M-21300 Sheet Nº:

REV	By	Date
1	JJM	21/03/2004
2	MM	22/04/2004

5 MOTOR

Manufacturer	TECO WESTINGHOUES
Power	625
Speed (r.p.m.)	500
Cooling fluid	AIR COOLED

6 INSTRUMENTS AND ACCESSORIES OF MOTOR

Six (6) simplex PT100 in motor winding (2 per phase)	INCLUDED
One (1) double PT100 per motor bearing	INCLUDED
One (1) reverse rotation detector	INCLUDED
Two (2) simplex PT100 at motor for measuring the inlet and outlet temperature of air (one at each measuring point)	NOT NECESSARY
One (1) water leakage detector for motor	NOT NECESSARY
Terminal juntion boxes fully assembled and wired	INCLUDED

7 PUMP MATERIALS

Inlet bell	Cast stainless steel type CF3M	Inlet bell	DUPLEX ASTM A240531803
Bowl	Cast stainless steel type CF3M	Bowl	DUPLEX ASTM A240531803
Impeller	Cast stainless steel type CF3M	Impeller	FERRALIUM 255-356 ASTM A351
Diffuser	Cast stainless steel type CF3M	Diffuser	DUPLEX ASTM A240531803
Shaft	Stainless steel type 316	Shaft	DUPLEX ASTM A276531803
Column pipe	Cast stainless steel type CF3M	Column pipe	DUPLEX ASTM A240531803
Inner colum	Cast stainless steel type CF3M	Inner colum	DUPLEX ASTM A240531803
Discharge elbow/ head	SS type CF3M/ Carbon steel	Discharge elbow/ head	DUPLEX ASTM A240531803
Casing wear rings	Cast stainless steel type CF3M	Casing wear rings	WAUKESMA 88
Impeller wear rings	Cast stainless steel type CF3M	Impeller wear rings	DUPLEX
Shaft sleeves	Stainless steel type 316	Shaft sleeves	DUPLEX
Radial bearings	Stainless steel type 316	Radial bearings	RUBBER/DUPLEX
Bolting	Stainless steel type 316	Bolting	CARBON STEEL
Wet bolting	Stainless steel type 316	Wet bolting	DUPLEX
Auxiliary piping	Stainless steel type 316L	Auxiliary piping	DUPLEX
Soleplate	Carbon steel	Soleplate	CARBON STEEL

8 MECHANICAL DATA

Moment of inertia WD^2		(N. m^2)	55 Kg*m^2
Torque	Nominal pump torque	(N. m)	10456
	Maximum required torque during starting	(N. m)	2092
	Maximum required torque at run-out conditions	(N. m)	9260
	Maximum torque which pump is able to withstand	(N. m)	_____
	Maximum applicable transient taking into account safety	(N. m)	_____

Forces and moments at pump discharge nozzle	Forces (N)	Fx= 13450	Fy= 13450	Fz= 13450
	Moments (N. m)	Mx= 4100	My= 4100	Mz= 4100
Weights APROXIMATE	Pump (kg)= 13550		Motor (kg)= 12800	
	Driver pedestal/ Head (kg)=		Total (kg)= 19250	

Thrust (at the coupling) ***	Downward	Maximum	(N) 150000
		Continous	(N) 100000
	Upward	Maximum	(N) 95000
		Continous	(N)

9 SHOP TESTS

Hidrostatic test at a gauge pressure P = 4.5 bar	6 barg
Performance test (at least 5 points)	YES INCLUDED
Submergence test (at Normal Operating Point and minimum level)	

10 OTHER REQUIREMENTS

1. Parallel operation
2. Painting of pump, motor and baseplate according to the specification
3. The lubricating and cooling water for the pump and motor shall be taken from the pump discharge

11 EXCEPTIONS

*** AT THE THRUST BEARING

12 REMARKS

(1) Measured from the free surface to the floor
(2) Measured from the baseplate to the floor
(3) Referred to the impeller inlet
(4) Referred to the bell inlet
(5) Viewed from the drive to the pump
(6) To be advised/confirmed by PPC and/or Supplier

Pump
Drawings

DRAWING NO.	REV.
45APMA86XE52	1

REVISIONS

REV.	DESCRIPTION	ECO No	DATE	REF. ZONE	REV'D	CHK'D	APPV'D
0	INITIAL ISSUE	–	11.6.04	–	J.I.C.	M.M.	J.M.
1	REVISED / INCLUDED CUSTOMER COMMENTS	–	8.9.04	–	J.I.C.	M.M.	J.M.
2	REVISED / INCLUDED CUSTOMER COMMENTS	–	11.11.04	–	M.H.	M.M.	J.M.

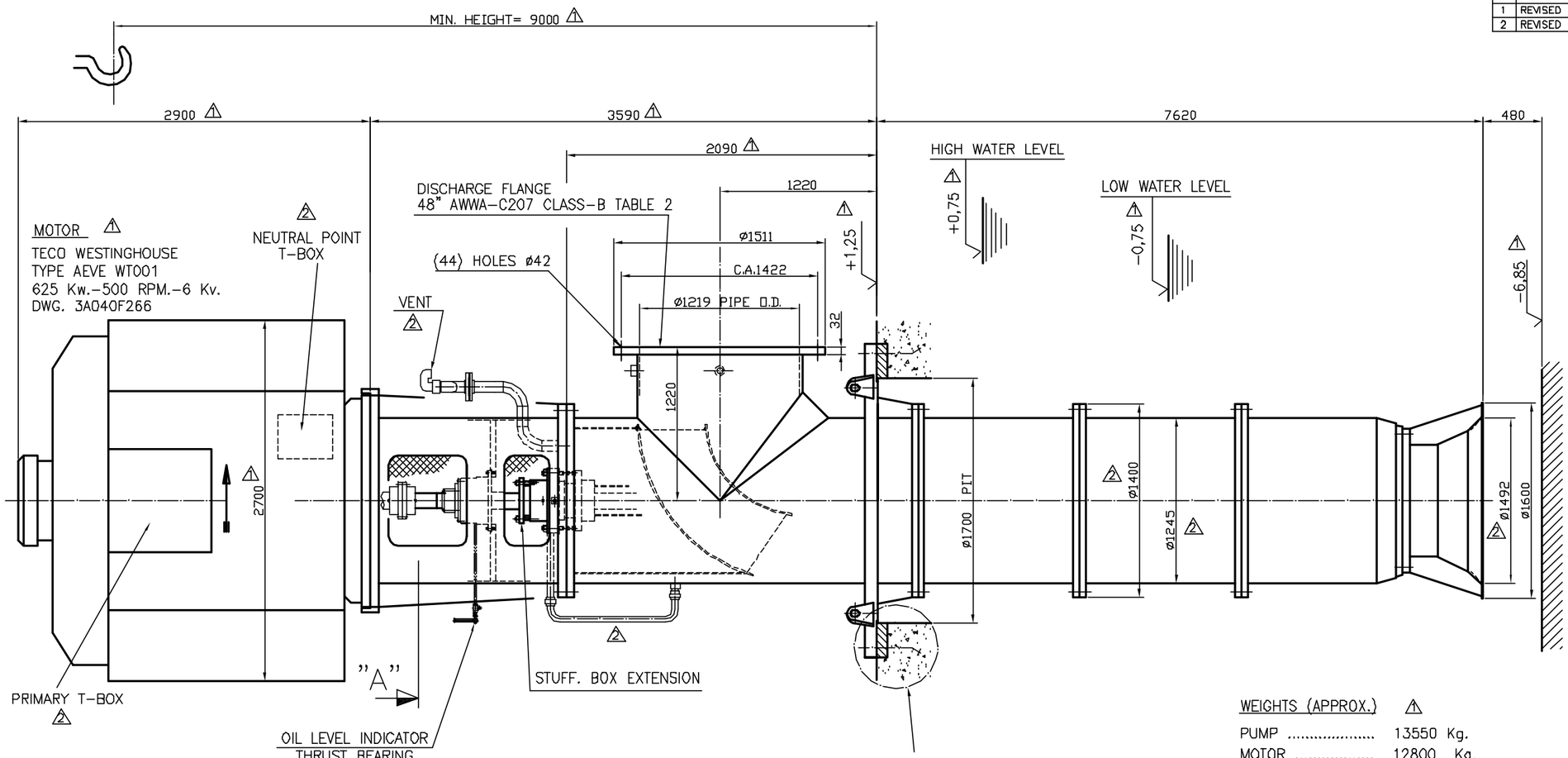

VIEW FROM "A"

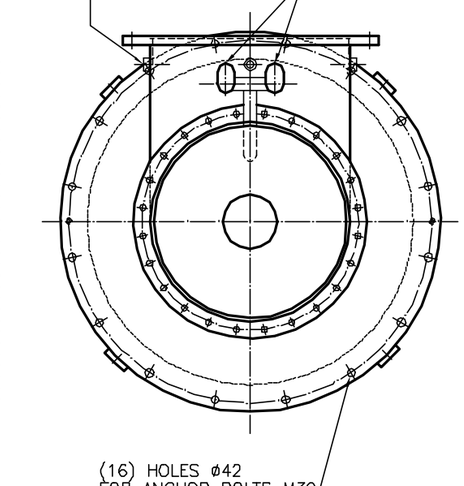

WEIGHTS (APPROX.) 1

PUMP	13550 Kg.
MOTOR	12800 Kg.
TOTAL	26350 Kg.

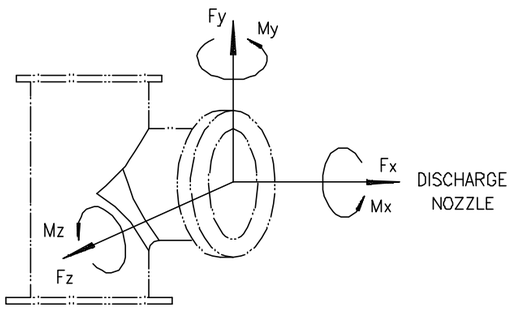

MAXIMUM ALLOWABLE NOZZLE LOADS

Fx=Fy=Fz= 1345 Kg

Mx=My=Mz= 410 Kgm

ANCHOR BOLTS DETAIL
(SUPPLIED BY CUSTOMER)

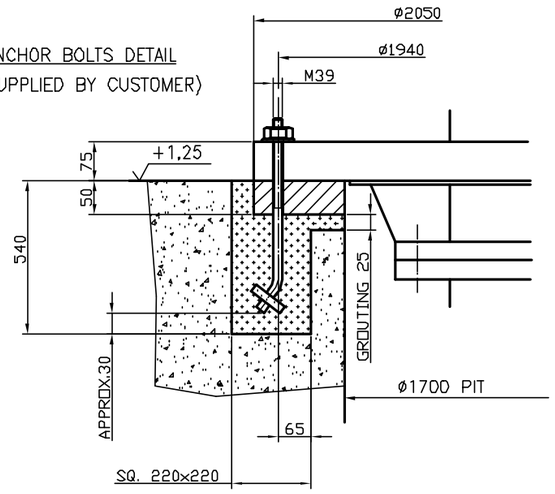

TOLERANCES

ALLOW ±10mm. FOR DISCHARGE NOZZLE LOCATION

±1% FOR ALL NOMINAL LINEAR DIMENSIONS

APPROVAL NOTE TO CUSTOMER

1.- DIMENSIONS, CONCEPTS, AND/OR COMMENTS, WITHIN THE SCOPE OF SUPPLY, WHICH ARE NOT EXPRESSLY REFERRED TO IN THE ORIGINAL BASIS, MUST BE SUBMITTED BY FLOWSERVE COORDINATOR AND REVIEWED

2.- DIMENSIONS, CONCEPTS, STANDARDS, SPECIFICATIONS, AND/OR DATA NOT EXPRESSLY REFERRED TO IN THE ORIGINAL BASIS, BUT ESSENTIAL MAY REQUIRE AN ADDITIONAL ENGINEERING SERVICE CHARGE

3.- ITEMS CONDITIONALLY APPROVED OR WITH DEFERRED APPROVAL BY CUSTOMER, MUST BE SPECIFICALLY STATED OTHERWISE DELIVERY MAY BE DELAYED.

PROPRIETARY NOTE

P.O. NUMBER:	LOI A-4526/AT/at	FLOW:	13.430 m3/h
END USER:	PPC	HEAD:	12.5 m
JOB:	Lavrion V	BHP:	542 Kw
PLANT:	Lavrion V CCPP	EFFICIENCY:	87%
UNIT:	V	RPM:	490
SERVICE:	Circulating Water Pumps	FLUID:	Sea Water
ITEM:	5 PAC 10/20 AP001	TEMPERATURE:	22°c
SERIAL No.:	–	S.G.:	1.0308
CUSTOMER INFORMATION		OPERATING CONDITIONS	

1st Angle Projection

STATUS OF APPROVAL

ORDER No.

DRAWN BY J.I.CABALLO	DATE 11.6.04
CHECKED BY M.MEROÑO	DATE 11.6.04
APPROVED BY J.MORENO	DATE 11.6.04

FLOWSERVE Pump Division Caslada Operations

DWG TITLE GENERAL ARRANGEMENT
PUMP TYPE 45APMA

SIZE	DRAWING NO.	REV.
A2	45APMA86XE52	2
	FILE CAD.: X102138	
SCALE	UNITS	SHEET NO. n/p

REV	DATE	PREP.	REVISED	APPRVD.	ISSUED FOR
2	11.11.04	M.H.	M.M.	J.M.	REVISED / INCLUDED CUSTOMER COMMENTS
1	8.9.04	J.I.C.	M.M.	J.M.	REVISED / INCLUDED CUSTOMER COMMENTS
0	11.6.04	J.I.C.	M.M.	J.M.	INITIAL ISSUE

Contains information for the design of standard systems and components

DOCUMENT PREPARED WITH CAD. DO NOT MODIFY MANUALLY

PUBLIC POWER CORPORATION

LAVRION V CC PP
DMKT 11 21 302

METKA

General Arrangement Drawing
Circulating Water Pumps
45APMA (5PAC 10/20 AP001)

FLOWSERVE

METKA DWG.No.	DIN A2
KKS DWG.No. 413-5-PAC-MDA-FPD-201	SCALE "-"
EA DWG.No.	SHEET 1 OF 1

DRAWING NO.	REV.
45APMA500XE51	A

REVISIONS							
REV.	DESCRIPTION	ECO No	DATE	REF. ZONE	REV D	CHKD	APPVD
0	INITIAL ISSUE	–	5.10.04	–	L.Y.	M.M.	J.M.
A	UPDATED	–	10.1.05	–	L.Y.	M.M.	J.M.

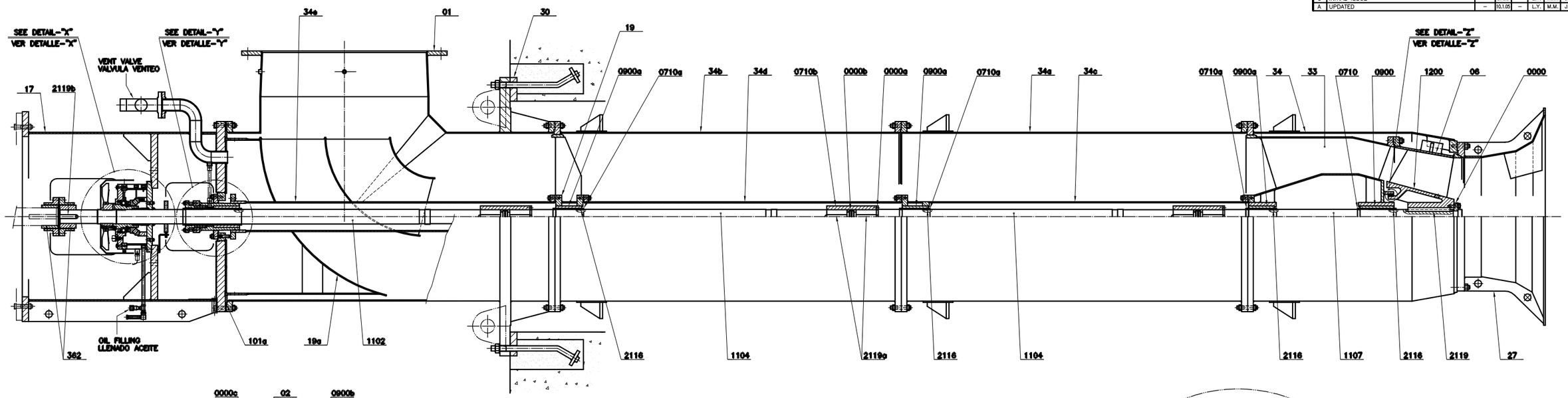

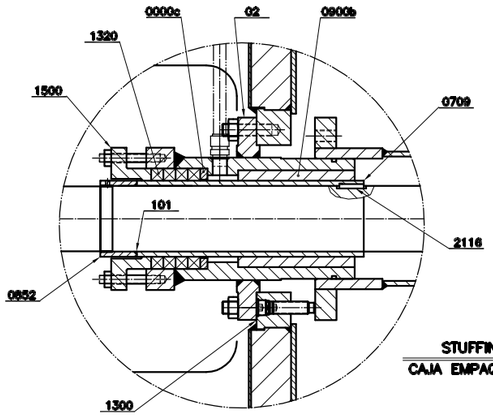

STUFFING BOX (DETAIL-"Y")
CAJA EMPAQUETADURA (DETALLE-"Y")

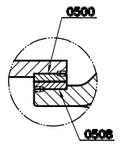

DETAIL-"Z"
DETALLE-"Z"

THRUST BEARING (DETAIL-"X")
CAJA RODAMIENTOS (DETALLE-"X")

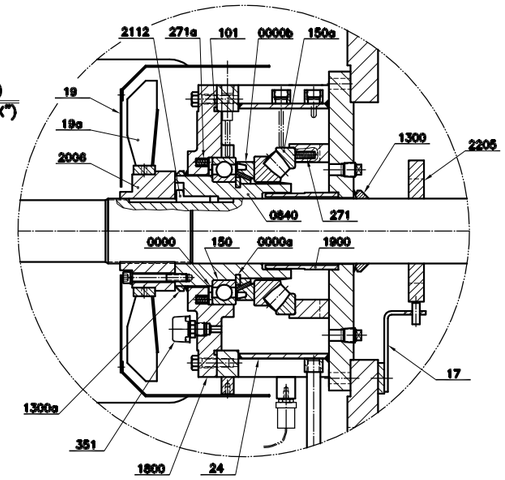

ITEM	QTY.	DESIGNATION	MATERIAL
34	1	Columna exterior inferior	ASTM A240 S31803
33	1	Pump casing Cuerpo de bomba	ASTM A240 S31803
30	1	Soleplate Placa fundación	EN-10025/S275-JR
27	1	Suction bell Campana aspiración	ASTM A240 S31803
19a	1	Discharge head liner Alabe deflector	ASTM A240 S31803
19	1	Liner Centrador	ASTM A240 S31803
17	1	Motor support Soporte motor	ASTM A240 S31803+EN-10025/S275-JR
0900b(*)	1	Bearing Cojinete	BTR SILVELINE COMPOUND 28-430 AND UNS S31803
0900a(*)	3	Bearing Cojinete	BTR SILVELINE COMPOUND 28-430 AND UNS S31803
0900(*)	1	Bearing Cojinete	UNS S31803 / RUBBER
0852	1	Collar Collar	ASTM A276 UNS S31803
0710b(*)	3	Sleeve coupling Manguito empalme ejes	ASTM A276 UNS S31803
0710a(*)	3	Sleeve Camisa cojinete	ASTM A276 UNS S31803
0710(*)	1	Sleeve Camisa cojinete	ASTM A276 UNS S31803
0709(*)	1	Stuffing box sleeve Camisa cojinete caja emp.	ASTM A276 UNS S31803
0508(*)	1	Casing wear ring-front Aro rozante impulsor inf.	WAUKESHA 88
0500(*)	1	Casing wear ring-rear Aro rozante impulsor sup.	ASTM A890 GR.1B
06	1	Shroud Envolvente	ASTM A240 S31803
02	1	Stuffing box extension Caja empaquetadura	ASTM A276 UNS S31803
01	1	Discharge head Cabezal	ASTM A240 S31803+EN-10025/S275-JR
0000c(*)	1	Stuffing box split ring Anillo caja empaquetadura	ASTM A276 UNS S31803
0000b(*)	3	Split ring Casquillo empalme ejes	ASTM A276 UNS S31803
0000a(*)	3	Split ring Anillo partido fijación acopl.	ASTM A276 UNS S31803
0000(*)	1	Impeller split ring Anillo tope impulsor (partido)	ASTM A276 UNS S31803

ITEM	QTY.	DESIGNATION	MATERIAL
2119b(*)	1	Key Chaveta acoplamiento	ASTM A276 UNS S31803
2119a(*)	6	Key Chaveta manguito empalme	ASTM A276 UNS S31803
2119(*)	1	Key Chaveta impulsor	ASTM A276 UNS S31803
2116	5	Key Chaveta camisa	ASTM A276 UNS S31803
2112(*)	1	Key Chaveta camisa	ASTM A276 UNS S31803
2006	1	Nut Tuerca regulación	CARBON STEEL
1500	1	Gland (2 halves) Prensaestopas partido	ASTM A276 UNS S31803
1320(*)	4	Packing ring Aro empaquetadura	MF-330
1300(*)	1	Gasket Junta plana	KLINGER SIL C4400
1200(*)	1	Impeller Impulsor	FERRALIUM 255 3SC
1107(*)	1	Shaft Eje bomba	ASTM A276 UNS S31803
1104(*)	2	Shaft Eje intermedio	ASTM A276 UNS S31803
1102(*)	1	Shaft Eje cabezal	ASTM A276 UNS S31803
362	1	Coupling Acoplamiento	CARBON STEEL
101a(*)	1	O'ring Cordón tórico	BUNA-N
101(*)	1	O'ring Junta tórica	BUNA-N
34e	1	Upper inner column Columna interior superior	ASTM A240 S31803
34d	1	Intermediate inner column Columna interior intermedia	ASTM A240 S31803
34c	1	Lower inner column Columna interior inferior	ASTM A240 S31803
34b	1	Upper outer column Columna exterior superior	ASTM A240 S31803
34a	1	Intermediate outer column Columna exterior intermedia	ASTM A240 S31803
34	1	Lower outer column Columna exterior inferior	ASTM A240 S31803
34b	1	Upper outer column Columna exterior superior	ASTM A240 S31803
34a	1	Intermediate outer column Columna exterior intermedia	ASTM A240 S31803
		Lower outer column	

THRUST BEARING
CAJA RODAMIENTOS EMPUJE

ITEM	QTY.	DESIGNATION	MATERIAL
2205	1	Reverse rotation detector system gear wheel Rueda dentada detector sentido giro	CARBON STEEL
2112(*)	1	Thrust bearing sleeve key Chaveta cabeza	CARBON STEEL
2006	1	Adjusting nut Tuerca regulación	CARBON STEEL
1900	1	Oil dam Tubo contención aceite	CARBON STEEL
1800	1	Housing cover Tapa rodamiento	CARBON STEEL
1300a(*)	1	Gasket "V" Junta "V"	CAUCHO NITRILE
1300(*)	1	Gasket "V" Junta "V"	CAUCHO NITRILE
351	1	Vent Tapón aireador	CARBON STEEL
271a	6	Spring Resorte	CARBON STEEL
271	6	Spring Resorte	CARBON STEEL
150a(*)	1	Thrust bearing 29332 E Rodamiento empuje	–
150(*)	1	Radial bearing 6032 Rodamiento radial	–
101(*)	1	O-ring Junta tórica	BUNA-N
24	1	Thrust bearing housing Caja rodamientos	CARBON STEEL
19a	1	Ventilator Ventilador	CARBON STEEL
19	1	Ventilator protection Protección ventilador	CARBON STEEL
17	1	Reverse rotation sensors support Soporte detector sentido giro	CARBON STEEL
0840	1	Thrust sleeve Buje arrastre	CARBON STEEL
0000b	1	Pumping ring Anillo	CARBON STEEL
0000a	1	Distance ring Anillo	CARBON STEEL
0000	1	Prisitioning ring Anillo	CARBON STEEL

APPROVAL NOTE TO CUSTOMER

1.-PURCHASER'S COMMENTS AND/OR CORRECTIONS, WITHIN THE SCOPE OF CONTRACT WILL BE MADE ON THE FIRST COMPLETED CERTIFIED DRAWING SUBMITTED BY FLOWSERVE CORPORATION AND RETURNED.

2.-CORRECTIONS, ALTERATIONS, ADDITIONS AND MODIFICATIONS OUTSIDE SCOPE OF CONTRACT OR MADE AFTER FIRST SUBMITTAL MAY REQUIRE AN ADDITIONAL ENGINEERING SERVICE CHARGE.

3.-ITEMS CONDITIONALLY APPROVED OR WITH DEFERRED APPROVAL BY PURCHASER, MUST BE SPECIFICALLY STATED OTHERWISE DELIVERY MAY BE EFFECTED.

P.O. NUMBER:	LOI A-4526/AT/at	FLOW:	13.430 m3/h
END USER:	PPC	HEAD:	12.5 m
JOB:	Lavrion V	BHP:	542 Kw
PLANT:	Lavrion V CCPP	EFFICIENCY:	87%
UNIT:	V	RPM:	490
SERVICE:	Circulating Water Pumps	FLUID:	Sea Water
ITEM:	5 PAC 10/20 AP001	TEMPERATURE:	22°c
SERIAL No.:	–	S.G.:	1.0308
	CUSTOMER INFORMATION		OPERATING CONDITIONS

1st Angle Projection

STATUS OF APPROVAL

ORDER No.

DRAWN BY L.YAGÜE	DATE 15.10.04	
CHECKED BY M.MEROÑO	DATE 15.10.04	
APPROVED BY J.MORENO	DATE 15.10.04	

FLOWSERVE Pump Division
Costado Operations

DWG TITLE **SECTIONAL ASSEMBLY**
PUMP TYPE 45APMA

SIZE	DRAWING NO.	REV.
A1	45APMA500XE51	A
	FILE CAD.: W102439	
SCALE	UNITS	SHEET NO. n/p

REV.	DATE	PREP.	REVISED	APPRVD.	ISSUED FOR
1	10.1.05	L.Y.	M.M.	J.M.	UPDATED
0	15.10.04	L.Y.	M.M.	J.M.	INITIAL ISSUE

PUBLIC POWER CORPORATION — LAVRION V CC PP — DMKT 11 21 302

METKA

FLOWSERVE

Sectional Assembly Drawing
Circulating Water Pumps
45APMA (5PAC 10/20 AP001)

METKA DWG.No.	DIN A1
KKS DWG.No. 5-PAC-MDP-FPD-224	SCALE "-"
EA DWG.No.	SHEET 1 OF 1

Contains information for the design of structures, systems and components..... YES ☐ NO ☐

VERIFICATION: N/A ☐ JUDGEP ☐ VERIFIER N1 ☐ N2 ☐

DOCUMENT PREPARED WITH CAD. DO NOT MODIFY MANUALLY

Project:
LAVRION V-CCPP DMKT 11 21 302

Title: General Notes to General Arrangement Drawing
(Circulating Pumps 5PAC10/20 AP001)

Supplier Document No:	-	Issue: 0
KKS Document No:	5-PAC-MRP-FPD-235	
Purpose of issue: For approval		Date: 8/07/04

00-Y-X-10302-F3/I Issue 1

Prepared: JM

Reviewed: LQ

Approved: VB

GENERAL NOTES TO DRAWING: 45APMA86XE52

VERTICAL WET PIT PUMPS

PUMP TYPE: 45APMA

CUSTOMER: METKA

PROJECT: LAVRION V
COMBINED CYCLE POWER PLANT

TAG NUMBER: 5 PAC 10/20 AP001

TWO (2) VERTICAL CIRCULATING WATER PUMPS

Rev	Date:	Comments	BY	CKD	APP
0	15 Jun 2004	Original issue	J.M.	L.Q.	J.M.

GENERAL NOTES TO DRAWING: 45APM86XE52

VERTICAL WET PIT PUMPS

PUMP TYPE: 45APMA

CLIENT: METKA
PROJECT: LAVRION V

1. THE GENERAL ARRANGEMENT DRAWING IS NOT TO SCALE WORK FROM DIMENSIONS.

2. READ INSTRUCTION BOOK BEFORE STARTING EQUIPMENT.

3. NEVER START PUMP WHILE UNDER VACUUM. VACUUM WITHIN THE PUMP MAY OCCUR DURING SHUTDOWN DUE TO FLOW REVERSAL IN THE SYSTEM. ALLOW SUFFICIENT TIME PRIOR TO RE-START TO PERMIT AIR TO ENTER THE PUMP. AN AIR RELEASE AND VACCUM BREAKER VALVE SHOULD BE LOCATED BETWEEN THE PUMP AND DISCHARGE VALVE.

4. FOR MOTOR INSTRUCTIONS, REFER TO LATEST MOTOR OUTLINE DRAWINGS AND PROCEDURES.

5. AVOID SUSTAINED PUMP OPERATION BELOW **11410 m^3/h** (MINIMUM FLOW) OR ABOVE **16500 m^3/h** (MAXIMUM FLOW).

6. TOLERANCES:

   (1). ALLOW PLUS OR MINUS 6 mm FOR VARIATION OF FOUNDATION BOLT HOLES. FOUNDATION BOLTS SHOULD NOT BE SET RIGIDLY UNTIL RECEIPT OF EQUIPMENT.

   (2). ALLOW PLUS OR MINUS 10 mm FOR ALL NOZZLE AND PIPING CONNECTION LOCATIONS.

   (3). ALLOW PLUS OR MINUS 1% FOR ALL NOMINAL LINEAR DIMENSIONS.

   (4). ALLOW PLUS OR MINUS 2 DEGREES FOR ALL NOMINAL ANGLES.

7. ALL HOLES IN FLANGES STRADDLE CENTERLINE UNLESS OTHERWISE INDICATED.

8. PIPING AND FITTINGS NOT SHOWN ARE TO BE FURNISHED BY CUSTOMER. DO NOT CONNECT TO PIPE TAPS UNLESS SPECIFIED ON DRAWING.

9. IF EXPANSION JOINT IS USED, EMPLOY TIE RODS OF ADEQUATE STRENGTH. (SIZED FOR 1-½ TIMES SHUT-OFF PRESSURE).

10. DISCHARGE VALVE SHOULD BE LOCATED AT LEAST ONE PIPE DIAMETER FROM FACE OF PUMP DISCHARGE FLANGE.

11. DESIGN PIPING SYSTEMS TO MINIMIZE PUMP NOZZLE LOADS.

12. THE COMBINED RESONANT FREQUENCY OF THE PUMP, MOTOR, FOUNDATION AND DISCHARGE PIPING HAS BEEN CALCULATED TO BE SUFFICIENTLY REMOVED FROM THE ROTATIONAL SPEED SO THAT NO VIBRATION AMPLIFICATION WILL OCCUR. THIS ANALYTICAL MODEL HAS BEEN BASED UPON THE FOLLOWING:

    A. A RIGID FOUNDATION SUPPORT SYSTEM THAT HAS A STIFFNESS OF AT LEAST 2.5 x 10^5 lb/ft (36.5 x 10^5 N/m). IT HAS BEEN ASSUMED THAT THE PUMP FOUNDATION PROVIDES NO LATERAL DEFLECTION TO THE COMBINED ASSEMBLY.

    B. AN ASSUMED DISCHARGE PIPING STIFFNESS HAS BEEN USED TO SIMULATE THE EFFECT OF THE DISCHARGE PIPING.

    AS A RESULT OF THE EFFECTS OF THE ABOVE ASSUMPTIONS ON THE ANALYSIS WHICH ARE BEYOND THE CONTROL OF **FLOWSERVE**, IT MAY BE NECESSARY TO CONDUCT SOME MINOR FIELD MODIFICATIONS TO CHANGE THE COMBINED SYSTEM RESONANT FREQUENCY IF IT IS NOT SUFFICIENTLY REMOVED FROM THE ROTATIONAL SPEED.

13. FLOWSERVE RECOMMENDS THAT CUSTOMER INSTALL INSTRUMENTATION TO CHECK SYSTEM RESISTANCE. VALVE SETTING CHANGES MAY BE REQUIRED DUE TO SYSTEM VARIATIONS UNDER NORMAL OPERATING CONDITIONS.

14. FOR SATISFACTORY OPERATION, A WATER HAMMER ANALYSIS SHOULD BE MADE BEFORE STARTING.

15. SPECIAL CONSIDERATIONS AND PROVISIONS MUST BE MADE TO AVOID THE CHANCE OF WATER HAMMER DURING PUMP START-UP AND OPERATION

ULTIMATE RESPONSIBILITY RESTS WITH THE SYSTEM DESIGNER WHO CONDUCTS THE TRANSIENT ANALYSIS. IN ANY CASES, SOME PRACTICAL GUIDELINES ARE:

A. AVOID STARTING ANY CLOSED SYSTEM HAVING VACUOUS SPACES.

B. AVOID HOLDING ANY LARGE PUMP SHUTOFF REGARDLESS OF TIME. EXCESSIVE VIBRATION AND DAMAGE CAN RESULT.

C. EMPLOY AUTOMATIC VENTING CONTROLS ON THE TOP OF ALL HORIZONTAL CASINGS TO ASSURE FULLY PRIMED CONDITIONS.

D. USE SHORT DISCHARGE LINES TO THE CONCRETE WALL OR PIPE SUPPORT, THIS WILL MAKE THE PIPE STIFFER AND WILL MINIMIZE LOADS OR VIBRATIONS TRANSMITTED TO PUMP DISCHARGE FLANGE AND DISCHARGE HEAD. IT IS PREFERABLE NOT TO USE EXPANSION JOINTS; IF USED, EMPLOY ADEQUATE TIE RODS.

WHILE FLOWSERVE FEELS AN OBLIGATION TO OFFER ENGINEERING CONSULTATION WITH RESPECT TO AVOID WATER-HAMMER, **THE FINAL RESPONSIBILITY RESTS WITH THE SYSTEM DESIGNER AND PLANT OPERATOR**.

CAUTION: NEVER START THE PUMP WHILE THE PUMP COLUMN IS UNPRIMED AND UNDER VACUUM.

16. CONNECTIONS.

(A)	DISCHARGE	TO MATCH 48” AWWA C207 CLASS B
(P)	COLUMN VENT	3” ANSI B16.5 – 150#
(Y)	GAGE CONNECTION (PLUGGED FOR SHIPMENT)	2 x 1/2” NPT

NOTE: ALL PIPE CONNECTIONS ARE NATIONAL TAPERED PIPE THREADS.

17. REVERSE ROTATION. IN ADDITION TO ITS NORMAL OPERATION AND AS A RESULT OF SUDDEN POWER CUTOFFS OR PRESSURE SWINGS IN PIPELINES, THE DIRECTION OF THE FLOW IS REVERSED OR THE PUMP IS DRIVEN BY THE FLUID.
WHEN THE PUMP IS RUNNING IN REVERSE FLOW, THE REVERSE SPEED CAN BE IN EXCESS OF THE NORMAL SPEED.
SHORT PERIODS OF OPERATION ARE NOT A PROBLEM; HOWEVER, CONSIDERATION MUST BE GIVEN TO A VALVE STUCK IN AN OPEN POSITION.
THE MAXIMUM REVERSE SPEED HAS BEEN ESTABLISHED FOR THIS APPLICATION IN **– 620 rpm**
THE ABOVE THEORETICAL VALUE HAS BEEN DETERMINED BY ASSUMING THAT 80% DESIGN HEAD WILL BE SEEN AT THE REVERSE FLOW CONDITION.

PUMP STORAGE PROCEDURE
(EXTENDED PERIODS OF PUMP INACTIVITY)

IF THE PUMP WILL NOT BE OPERATED FOR AN EXTENDED PERIOD OF TIME (MORE THAN 1 MONTH) IN THE INSTALLED CONDITION, THE FOLLOWING STEPS SHOULD BE TAKEN TO PREVENT **CORROSION DAMAGE** TO THE PUMPS COMPONENTS:

STEP 1

THE PUMP BAY SHOULD BE DEWATERED OF SIGNIFICANT AMOUNTS OF BRACKISH WATER.

STEP 2

THE EXTERIOR BELOW MOUNTING PORTIONS OF THE PUMP SHOULD BE WASHED DOWN WITH HIGH PRESSURE POTABLE WATER AFTER THE PIT HAS BEEN DEWATERED.

STEP 3

EVERY EFFORT SHOULD BE MADE TO WASH DOWN THE INTERNAL PORTIONS OF THE PUMP WITH HIGH PRESSURE POTABLE WATER AFTER THE PIT HAS BEEN DEWATERED.

STEP 4

THE COLUMN VENT VALVE OF THE PUMP SHOULD BE OPENED UP TO THE ATMOSPHERE TO ALLOW THE GREATEST AMOUNT OF AIR EXCHANGE TO TAKE PLACE WITHIN THE PUMP.

STEP 5

THE DEWATERED PIT SHOULD BE OPENED TO THE ATMOSPHERE (BY REMOVING ACCESS COVERS, ETC) TO THE GREATEST DEGREE POSSIBLE TO MAXIMIZE THE AIR EXCHANGE WITHIN THE PIT.

STEP 6

THE PUMP AND MOTOR SHOULD BE TURNED MANUALLY FOR SEVERAL ROTATIONS EVERY TWO WEEKS. THIS CAN BE ACCOMPLISHED BY USING A STRAP WRENCH ON THE COUPLING LOCATED BETWEEN THE MOTOR AND THE PUMP.

PUMP INTAKE DESIGN

IT IS THE RESPONSIBILITY OF THE USER TO PROVIDE UNIFORM FLOW TO THE SUCTION BELL OF THE PUMP IN ORDER TO ALLOW THE PUMP TO ACHIEVE OPTIMUM HYDRAULIC PERFORMANCE FOR ALL OPERATING CONDITIONS. SPECIFIC HYDRAULIC PHENOMENA HAVE BEEN IDENTIFIED THAT CAN ADVERSELY AFFECT THE PERFORMANCE OF VERTICAL PUMPS. THE PHENOMENA THAT MUST NOT BE PRESENT TO AN EXCESSIVE DEGREE ARE: SUBMERGED VORTICES, FREE-SURFACE VORTICES, EXCESSIVE PRE-SWIRL OF FLOW ENTERING THE PUMP, NON-UNIFORM SPATIAL DISTRIBUTION OF VELOCITY AT THE IMPELLER EYE, EXCESSIVE VARIATIONS IN VELOCITY AND SWIRL WITH TIME, AND ENTRAINED AIR OR GAS BUBBLES. IT IS THE USER'S RESPONSIBILITY TO ENSURE THAT THE ADVERSE FLOW PHENOMENA DESCRIBED ABOVE ARE WITHIN THE LIMITS OUTLINED IN SECTION 9.8.5.6 OF ANSI/HI 9.8-1998. DAMAGE CAUSED BY PUMP OPERATION OUTSIDE THE LIMITS DEFINED IN SECTION 9.8.5.6 OF ANSI/HI 9.8-1998 WILL NOT BE COVERED UNDER THE PUMP WARRANTY. A PROPERLY CONDUCTED PHYSICAL MODEL STUDY IS A RELIABLE METHOD TO IDENTIFY UNACCEPTABLE FLOW PATTERNS AT THE PUMP SUCTION FOR GIVEN SUMP OR PIPING DESIGNS AND TO DERIVE ACCEPTABLE INTAKE SUMP OR PIPING DESIGNS.

THIS INFORMATION PRESENTS ACCEPTED BEST PRACTICES BASED UPON INFORMATION AVAILABLE TO FLOWSERVE AS OF THE DATE OF THIS DRAWING. NOTHING PRESENTED HEREIN IS TO BE CONSTRUED AS A WARRANTY OF SUCCESSFUL PERFORMANCE UNDER ANY CONDITIONS FOR ANY APPLICATION.

Instruments List

Project:

LAVRION V-CCPP
DMKT 11 21 302

Title: P&ID

Circulating Water Pumps (5PAC10/20 AP001)

Supplier Document No:	-	Issue: 3
KKS Document No:	5-PAC-MDD-FPD-206	
Purpose of issue: Final		Date: 31/05/05

00-Y-X-10302-F3/I Issue 1

Prepared: NO

Reviewed: MAO

Approved: MM

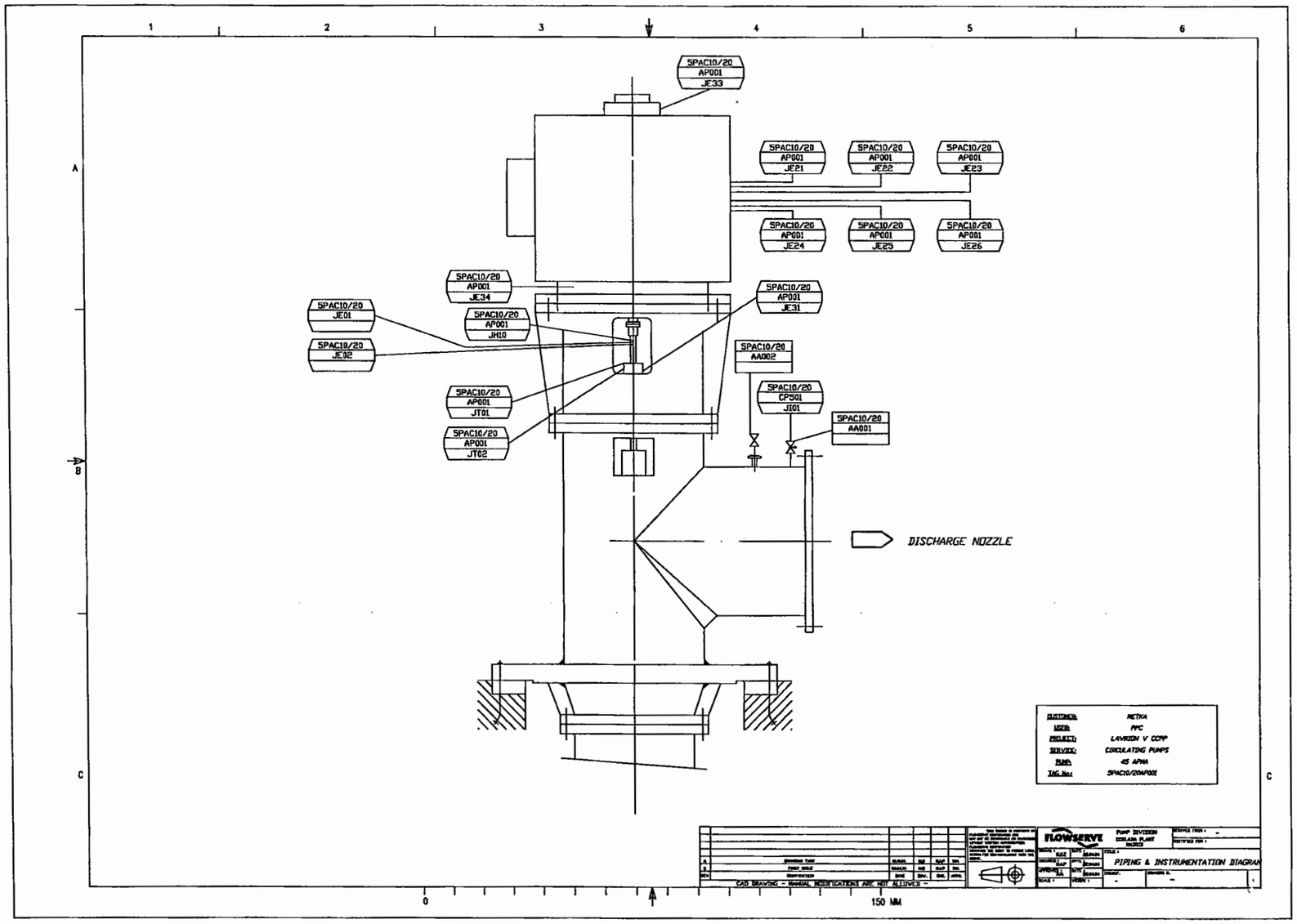
5PAC10/20 AP001 JE33
5PAC10/20 AP001 JE21
5PAC10/20 AP001 JE22
5PAC10/20 AP001 JE23
5PAC10/20 AP001 JE24
5PAC10/20 AP001 JE25
5PAC10/20 AP001 JE26
5PAC10/20 AP001 JE34
5PAC10/20 JE01
5PAC10/20 AP001 JH10
5PAC10/20 JE02
5PAC10/20 AP001 JE31
5PAC10/20 AA002
5PAC10/20 AP001 JT01
5PAC10/20 CP501 JI01
5PAC10/20 AP001 JT02
5PAC10/20 AA001
DISCHARGE NOZZLE
CUSTOMER: METKA
USER: PPC
PROJECT: LAVRION V CCPP
SERVICE: CIRCULATING PUMPS
PUMP: 4S APWA
TAG.No.: 5PAC10/20AP001
FLOWSERVE
PUMP DIVISION
COLLAR PLANT
HAIRES
PIPING & INSTRUMENTATION DIAGRAM
CAD DRAWING - MANUAL MODIFICATIONS ARE NOT ALLOWED -
150 MM

Project:

LAVRION V-CCPP
DMKT 11 21 302

Title: Pump Insturment List

Circulating Water Pumps (5PAC10/20 AP001)

Supplier Document No:	-	Issue: 1
KKS Document No:	5-PAC-YLP-FPD-227	
Purpose of issue: For Revision		Date: 31/12/04

00-Y-X-10302-F3/I Issue 1

Prepared: NO

Reviewed: MAP

Approved: MM

FLOWSERVE

Customer: **METKA**
Project: **LAVRION V**
Tag Nº **5PAC10/20AP001**
Service **CIRCULATING PUMPS**
FPD REF: **10.07.50.10897**

SHEET **1**
OF **1**

Equipment	REV.	Tag	Location	Type of instrument	Manufactured/ Supplied by	Model	Medium	Unit	Messur.Range From	Messur.Range To	ALIMENT.	Output	Set Point Alarm	Set Point Trip	Drawing No.	Notes
PUMP	A	5PAC10/20AP001JE31	Thrust bearing	Temperature detector	ATC / Flowserve	ATC-TE-0319	Oil	ºC	-50	400	-	Ohm	85	95	I-000310	2x PT100/ 3W . Thermowell
"		5PAC10/20AP001JT01	Pump bearing	Vibration transmitter	ATC / Flowserve	A98/ XT121V	Metal	mm/seg	0	15	24 VCC	4-20mA	10	12	I-000127	2 Wires
"		5PAC10/20AP001JT02	Pump bearing	Vibration transmitter	ATC / Flowserve	A98/ XT121V	Metal	mm/seg	0	15	24 VCC	4-20mA	10	12	I-000127	2 Wires
"	A	5PAC10/20AP001JH10	Pump axis	Reverse detector (amplifier)	P.F.(ATC) / Flowserve	PF-RD-0167	Metal	-	-	-	230 VDC	2 SPDT	-	-	I-000161	
"		5PAC10/20AP001JE01	Pump axis	Reverse detector (senor 1)	P.F.(ATC) / Flowserve	PF-RD-0167	Metal	-	-	-	-	-	-	-	I-000161	
"		5PAC10/20AP001JE02	Pump axis	Reverse detector (senor 2)	P.F.(ATC) / Flowserve	PF-RD-0167	Metal	-	-	-	-	-	-	-	I-000161	
"		5PAC10/20CP501JI01	Discharge nozzle	Pressure indicator	Nuova Fima (ATC)/ Flowserve	NF-PI-073	Water	Bar	0	4	-	-	-	-	I-00070	Mod. MGS18/3/A. Dial 150mm. Security glass. Filled: Silicone.
		Motor Instrument in Motor Intstrument List 5-PAC-YLP-FPD-256														

Rev.	DESCRIPTION	Name	Date
0	FIRST ISSUE	N.O	23/04/2004
A	CHANGING TAGS	N.O	18/10/2004

Pump: 45 APMA

Prepared by: N.O.Z
Checked by: M.A.P.M.
App´d by: M.M.

Note: To identify these signals please refer to P&ID 5-PAC-MDD-FPD-206

TITLE: **CIRCULATING WATER PUMP INSTRUMENT LIST**

PUMP

REF:

DRAWING **5-PAC-YLP-FPD-227**

A

NOTE: THIS PUMP WORKS WITH A ROTATIONAL SPEED METER MS22-RI WITH ANALOGUE OUTPUT

Project:

LAVRION V-CCPP
DMKT 11 21 302

Title: Motor Instrument List

Circulating Water Pumps (5PAC10/20 AP001)

Supplier Document No:	-	Issue: 1
KKS Document No:	5-PAC-YLP-FPD-256	
Purpose of issue: For Revision		Date: 4/01/05

00-Y-X-10302-F3/I Issue 1

Prepared: NO

Reviewed: MAP

Approved: MM

FLOWSERVE

Customer: **METKA**
Project: **LAVRION V**
Tag Nº **5PAC10/20AP001**
Service **CIRCULATING PUMPS**
FPD REF: **10.07.50.10897**
P.O. -

SHEET **1**
OF **1**

Equipment	REV.	Tag	Location	Type of instrument	Manufactured/ Supplied by	Model	Medium	Unit	Messur.Range From	Messur.Range To	ALIMENT.	Output	Set Point Alarm	Set Point Trip	Drawing No.	Notes
MOTOR		5PAC10/20AP001JE21	Motor winding phase R	Temperature detector	**Minco**	**S9785PA100T260Z60**	Metal	ºC	0	200		Ohm	**130**	**150**		Pt 100 Single / 3wires
"		5PAC10/20AP001JE22	Motor winding phase S	Temperature detector	**Minco**	**S9785PA100T260Z60**	Metal	ºC	0	200		Ohm	**130**	**150**		Pt 100 Single / 3wires
"		5PAC10/20AP001JE23	Motor winding phase T	Temperature detector	**Minco**	**S9785PA100T260Z60**	Metal	ºC	0	200		Ohm	**130**	**150**		Pt 100 Single / 3wires
"		5PAC10/20AP001JE24	Motor winding phase R	Temperature detector	**Minco**	**S9785PA100T260Z60**	Metal	ºC	0	200		Ohm	**130**	**150**		Pt 100 single / 3 wires / (spare)
"		5PAC10/20AP001JE25	Motor winding phase S	Temperature detector	**Minco**	**S9785PA100T260Z60**	Metal	ºC	0	200		Ohm	**130**	**150**		Pt 100 single / 3 wires / (spare)
"		5PAC10/20AP001JE26	Motor winding phase T	Temperature detector	**Minco**	**S9785PA100T260Z60**	Metal	ºC	0	200		Ohm	**130**	**150**		Pt 100 single / 3 wires / (spare)
"		5PAC10/20AP001JE41	Cold air	Temperature detector	N.A.											
"		5PAC10/20AP001JE42	Hot air	Temperature detector	N.A.											
"		5PAC10/20AP001JE92	Detector de fugas	NAMUR DIN	N.A.											
"	Rev 1	5PAC10/20AP001JE33	Radial bearing , driven end	Temperature detector	**Teco / Teco**	**3A955**	Metal	ºC	0	150		Ohm	**90**	**95**		2 x Pt 100 / 3W
"	Rev 1	5PAC10/20AP001JE34	Radial bearing , non driven end	Temperature detector	**Teco / Teco**	**3A955**	Metal	ºC	0	150		Ohm	**90**	**95**		2 x Pt 100 / 3W

Rev.	DESCRIPTION	Name	Date
0	FIRST ISSUE	N.O	15/07/2004
	SECOND ISSUE	N.O.	04/01/2005

Pump: 45 APMA

Prepared by: N.O.Z
Checked by: M.A.P.M.
App´d by: M.M.

TITLE: **CIRCULATING MOTOR INSTRUMENT LIST**

MOTOR

REF: DRAWING **5-PAC-YLP-FPD-256** **1**

Project:

LAVRION V-CCPP
DMKT 11 21 302

Title: Pump Valve List

Circulating Water Pumps (5PAC10/20 AP001)

Supplier Document No:	-	Issue: 2
KKS Document No:	5-PAC-MLP-FPD-226	
Purpose of issue: For Revision		Date: 4/01/05

00-Y-X-10302-F3/I Issue 1

Prepared: NO

Reviewed: MAP

Approved: MM

FLOWSERVE

Customer: **METKA**
Project: **LAVRION V**
Tag Nº **5PAC10/20AP001**
Service **CIRCULATING PUMPS**
FPD REF: **10.07.50.10897**
P.O. -

HOJA **1**
de **1**

Equipment	REV.	Tag	Location	Type of valve	Drive	Material of casing	Manufactured/ Supplied by	Medium	Size	Connection	Rating	Design Press.(Bar)	Design Max. Tª (ºC)	Model	Drawing No.	NOTES
PUMP		5PAC10/20AA001	Discharge nozzle	Needle valve	H	AISI-316	ATC / Flowserve	Sea Water	1/2"	NPT	3000#	255	427	RENP-NV-040	I-00034	
		5PAC10/20AA002	Vent connection on discharge head	Vent Valve (Air release and vacuum breaker)	Automatic	Reinforced Nylon	ARI / Flowserve	Sea Water	2"	BSP	16 bar max	20	50	D-040	ECD0402000	

Rev.	DESCRIPTION	DATE	Name
0	FIRST ISSUE	23/04/2004	N.O
A	GENERAL ISSUE	18/10/2004	N.O
B	GENERAL ISSUE	03/11/2004	N.O

Drive	Connections
H = Hand drive	Fl = Flanged
E = Electric drive	SW = Socket weld
M = Magnetic drive	NPT = NPT thread
F = Spring drive	GS = GAS thread
A = Automatic	

Pump: 45 APMA

Prepared by N.O.Z
Checked by M.A.P.M.
App`d by M.M.

CIRCULATING WATER PUMPS

TITULO: **VALVES LIST**
PUMP

REF:

PLANO N. **5-PAC-YHP-FPD-228** **B**

Project:

LAVRION V-CCPP
DMKT 11 21 302

Title: Valve & Instrument Pump & Motor Data Sheets

Circulating Water Pumps (5PAC10/20 AP001)

Supplier Document No:	-	Issue: 1
KKS Document No:	5-PAC-YHP-FPD-228	
Purpose of issue: Final		Date: 31/05/05

Prepared: MM

Reviewed: JM

Approved: CV

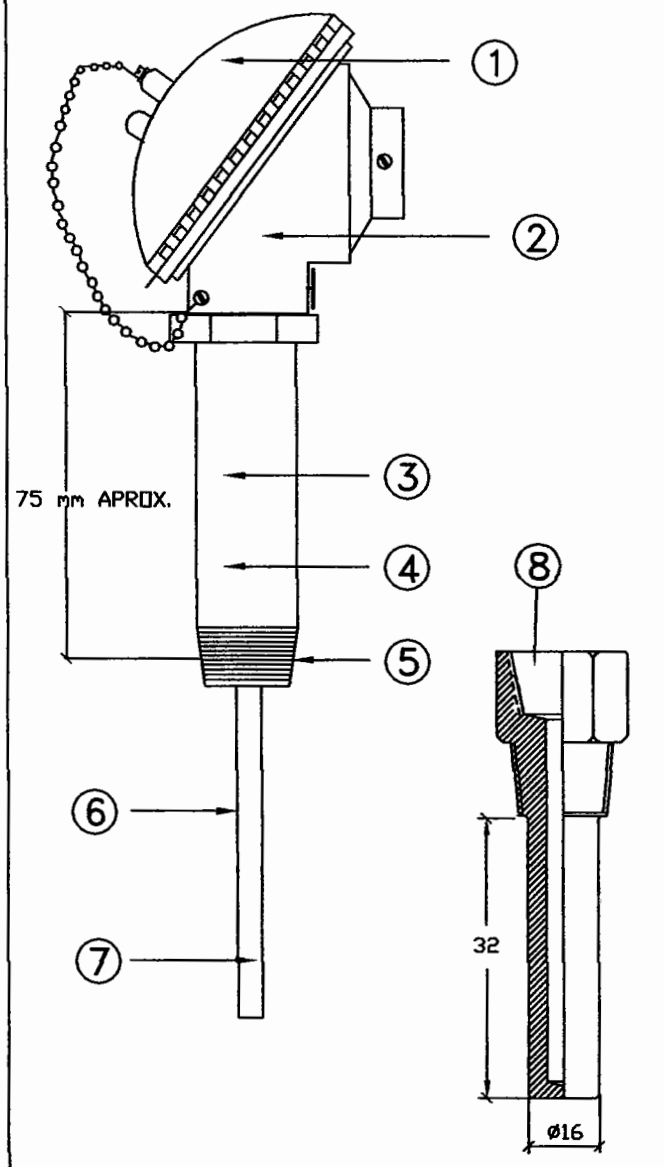

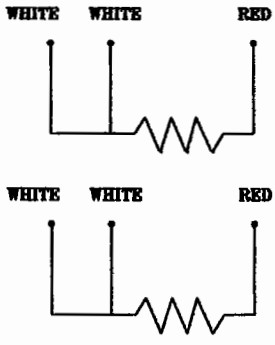

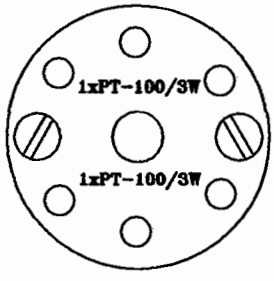

GENERAL SPECIFICATION

- Measuring element double PT-100/3w
- Table Ref. Temp./Ohm, DIN 43760/IEC751
- Protection head IP-65
- Tolerance class B
- Std. temperature range: -50 to +400°C
- Electrical connection: 1/2"NPT-F
- Oil nipple leakproof & spring-loaded holders

MATERIAL SPECIFICATION

POS.	DESIGNATION	MATERIAL
1	Head cover screwed	Aluminium
2	Terminals block ø42mm	Ceramic
3	Spring-loaded holders	Galv.Iron
4	Nipple 1/2" Sch.80	AISI-316
5	Process connection 1/2"NPT-M	AISI-316
6	Sheath ø6mm	AISI-316
7	Mineral insulated	100% MgO
8	Termowell 1/2"NPT-Fx1/2"NPT-M	AISI-316

ATC P/N:

ATC-TE-0249

QTY: 2

TAGS: 5PAC10/20AP001JE31

TAGS: -

-	-	-	-	-
-	-	-	-	-
0	05.10.04	N.O	M.A.P	-
ISS.	DATE	DWG	CHEK.	APPRO.

APLICACIONES TECNICAS Y CONTROL S.A.
C/Cemento,5. TORREJÓN DE ARDOZ
28850 MADRID
Telf.:676.63.63 Fax:676.03.21
E-mail: info@atc-control.com

Customer: FLOWSERVE

Y/Ref.: 10.07.50.10897

Drawing N°TE037304001

Sheet 1/1

O/Ref.: 240386

Scale:

Description: RTD PROBE

Frequency Current Converters with Limit Value and Direction of Rotation

KFU8-UFT-2.D

CE

48 ... 253 V AC / 20 ... 90 V DC
- 2 inputs
- 2 relay outputs
- 2 electronic outputs, isolated
- Lead breakage monitoring (can be deactivated)
- Parameterisation via control panel

(with control panel)

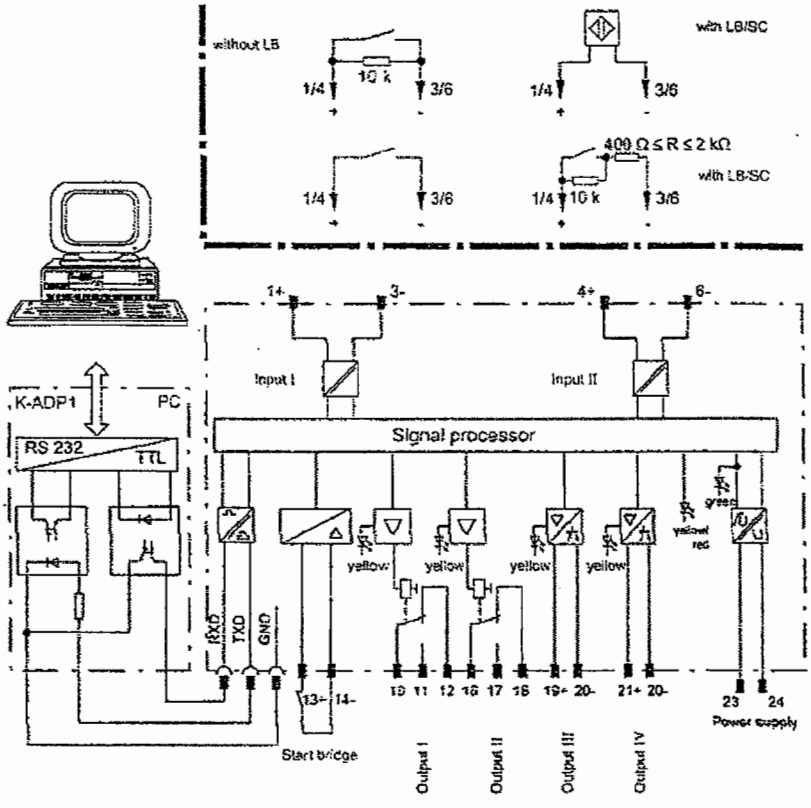

Function

The device processes 2 input frequencies (max. 1 kHz).
NAMUR and non-reflecting switch signals can be processed.
The rotation direction indication evaluates input signals of both inputs offset by 90°. Depending on the direction of rotation, the corresponding outputs switch.
During synchronization monitoring, the pulse counts of inputs I and II are compared during a measurement cycle. If the measured difference in pulse is greater than the value set in the parameter, the specified output switches.
The two electronic outputs switch the input signal serially.
The input and output circuits are galvanically separated. The power rail can take over the role of supplying power and transferring combined fault indications.

Construction

Front View

Housing type B2
(see system description)

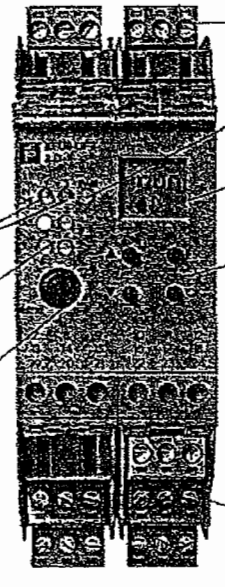

5PAC10/20AP001

JH10
JE01
JE02

CUSTOMER: FLOWSERVE
Y.REF.: 10.07.50.10897
O.REF.: 240386
DRAWING: RD037304001
TAG: 5PAC10/20AP001JH10-JE01-JE02

APLICACIONES TECNICAS Y CONTROL, S.A.
Cementio, 5 · 28850 TORREJON DE ARDOZ
MADRID
Telf: 676 63 63 - Fax: 676 03 21

21.01.2002

114133_6

5PAC 10/20AP001

JH10
JE01
JE02

Power supply	
Connection type	terminals 23, 24
Rated operational voltage	20 ... 90 V DC / 48 ... 253 V AC
Power loss	2.2 W / 3.5 VA
Power consumption	2.5 W / 4 VA
Input (not intrinsically safe)	
Connection type	
Input	
Connection type	input I: terminals 1+, 3- input II: terminals 4+, 6- start-up override: terminals 13+, 14-
Function	reset
Open loop voltage	18 V
Nominal data	in accordance with IEC 60947-5-6 (NAMUR, DIN 19234); see system description for electrical data
Short-circuit current	5 mA
Active/Passive	I > 4 mA (for min. 100 ms) / I < 1.5 mA
Input pulse length/input pulse interval	≥ 50 µs / ≥ 50 µs
Lead monitoring	breakage I ≤ 0.15 mA Short circuit protection I > 6.5 mA
Output (not intrinsically safe)	
Connection type	output I: terminals 10, 11, 12 output II: terminals 16, 17, 18 output III: terminals 19+, 20- output IV: terminals 21+, 20-
Output I and II	signal , relay
Contact loading	250 V AC / 2 A / cos φ ≥0.7; 40 V DC / 2 A
Mechanical life	5×10^7 switchings
Energized/De-energized delay	approx. 20 ms / approx. 20 ms
Output III and IV	signal , electronic output, passive
Signal level	1-signal: (L+) -2.5 V (50 mA, short-circuit/overload proof) 0-signal: switched off (off-state current ≤ 10 µA)
Programming interface	
Connection type	programming socket
Interface	RS 232
Transfer characteristics	
Frequency range	0.001 ... 1000 Hz 10 ... 1000 Hz
Galvanic isolation	
Input/Other circuits	safely isolated in accordance with DIN VDE 0106 Part 101, design isolation voltage 253 V_{eff}
Output I, II/Other circuits	safely isolated in accordance with DIN VDE 0106 Part 101, design isolation voltage 253 V_{eff}
Mutual output I, II, III	safely isolated in accordance with DIN VDE 0106 Part 101, design isolation voltage 253 V_{eff}
Mutual output I, II, IV,	safely isolated in accordance with DIN VDE 0106 Part 101, design isolation voltage 253 V_{eff}
Output III, IV/Mains	safely isolated in accordance with DIN VDE 0106 Part 101, design isolation voltage 253 V_{eff}
Output III, IV/Mains and collective error	safely isolated in accordance with DIN VDE 0106 Part 101, design isolation voltage 253 V_{eff}
Output III, IV/V	function insulation acc. to DIN EN 50178, design isolation voltage 253 V_{eff} function insulation acc. to DIN EN 50178, design isolation voltage 253 V_{eff}
Output V/Mains and collective error	safely isolated in accordance with DIN VDE 0106 Part 101, design isolation voltage 253 V_{eff} according DIN VDE 0106 Part 101 safely isolated, design isolation voltage 253 V_{eff}
interface/Mains	safely isolated in accordance with DIN VDE 0106 Part 101, design isolation voltage 253 V_{eff}
interface/Output III, IV	function insulation acc. to DIN EN 50178, design isolation voltage 253 V_{eff}
Ambient conditions	
Ambient temperature	-20 ... 60 °C (253 ... 333 K)
Standard conformity	
Input	according to DIN EN 60947-5-6
Coordination of insulation	accord. to DIN EN 50178
Galvanic isolation	accord. to DIN EN 50178
Climatic conditions	accord. to DIN IEC 721
Electromagnetic compatibility	accord. to EN 50081-2 / EN 50082-2
Mechanical specifications	
Mass	300 g

CUSTOMER: FLOWSERVE
Y.REF.: 10.07.50.10897
O.REF.: 240386
DRAWING: RD037304001
TAG: 5PAC10/20AP001JH10-JE01-JE02

Accessories

K-CJC
Removable terminals with integrated temperature measurement sensor for cold junction compensation for thermocouples.

Pactware
Device specific drivers (DTM)

Adapter K-ADP1
Interface adapter for connecting with the serial interface of a PC/Notebook.

5PAC10/20AP001
JH10
JE01
JE02

CUSTOMER: FLOWSERVE
Y.REF.: 10.07.50.10897
O.REF.: 240386
DRAWING: RD037304001
TAG: 5PAC10/20AP001JH10-JE01-JE02

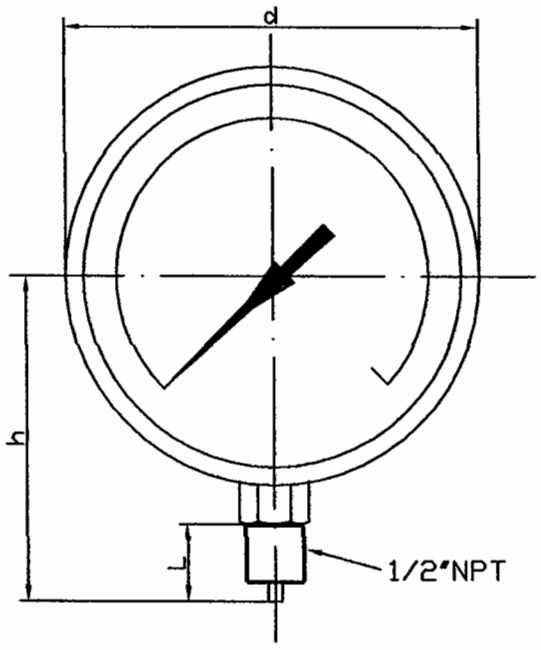

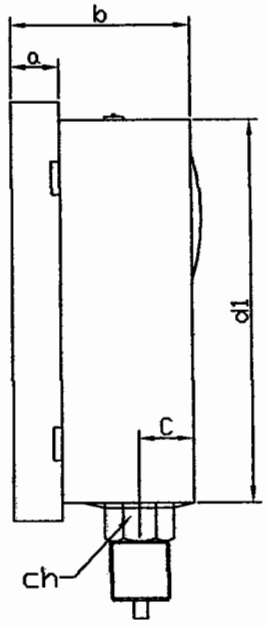

SPECIFICATIONS:	
Manufactured: NUOVA FIMA	
Ambient temperature: −25/ +65°C	
Socket material: AISI−316L	
Protection: IP−65	
Elastic element: AISI−316L by drawn tube without welding	
Case: AISI−304	
Ring: AISI−304, bayonet lock	
Filled: Silicone	
Window: security glass	
Movement: stainless steel	
Dial: aluminium, white with black markings	
ATC P/N:	RANGE: (in Bar)
NF−PI−073	0−4
−	−
QTY: 2	
TAG: 5PAC10/20CP501JI01	
TAG: −	

(Dimensions in mm)

DN	a	b	c	d	d1	h	L	ch
6"	0.59"	2"	0.65"	6.3"	6"	4.6"	0.8"	1"

ISS.	DATE	DWG	CHEK.	APPRO.
−	−	−	−	−
−	−	−	−	−
0	5.10.04	N.O	M.A.P	−

APLICACIONES TECNICAS Y CONTROL S.A.
C/Cementa,5. TORREJÓN DE ARDOZ
28850 MADRID
Telf.:676.63.63 Fax:676.03.21
E-mail: info@atc-control.com

Customer: FLOWSERVE
Y/Ref.: 10.07.50.10897

Drawing N°: PI037304003

Sheet 1/1

O/Ref.: 240386

Scale:

Description: PRESSURE GAUGE MOD. MGS18/3/A/T32

5PAC 10120AP001 JT01
5PAC 10120AP001 JT02

Technical features

Composition:
- AISI 303 integrated transmitter

Power supply:
- 24 Vdc (24 ÷ 35 Vdc) current loop 4 ÷ 20 mA (2 wires)
- Maximum load 500 Ω

External connections:
- MIL – C – 5015 (2 pin)
- Terminal board (max cable section 2,5 mm²) for hazardous area application

Environmental range and protection degree:
- - 20°C ÷ + 70°C
- IP65 CEI 70-1 (IEC 529) standards

Frequency response:
- 1 ÷ 1000 Hz

Insulation:
- ≥ 1000 V between signal and box

Application axis:
- any

Accessories:
- M8 x 1,25 process connection
- 90° output EExd box ¾" NPT female

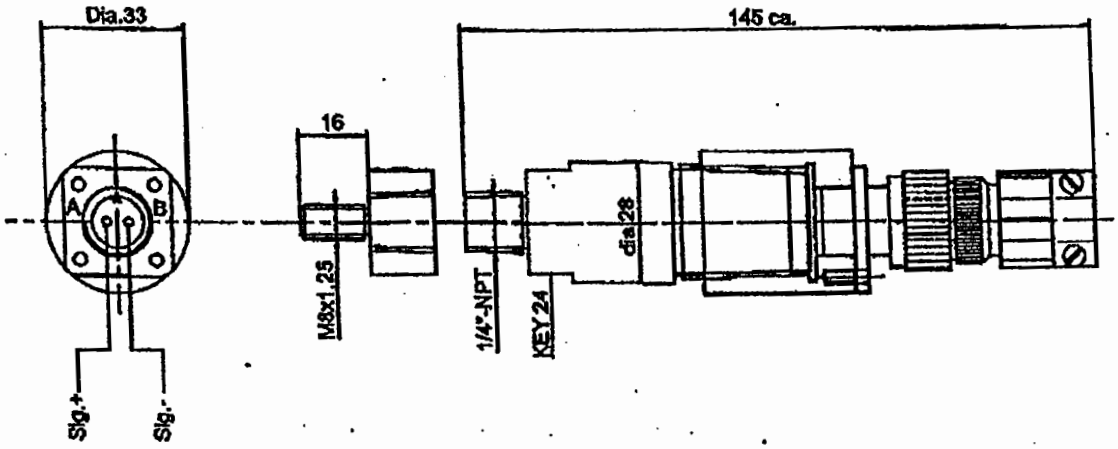

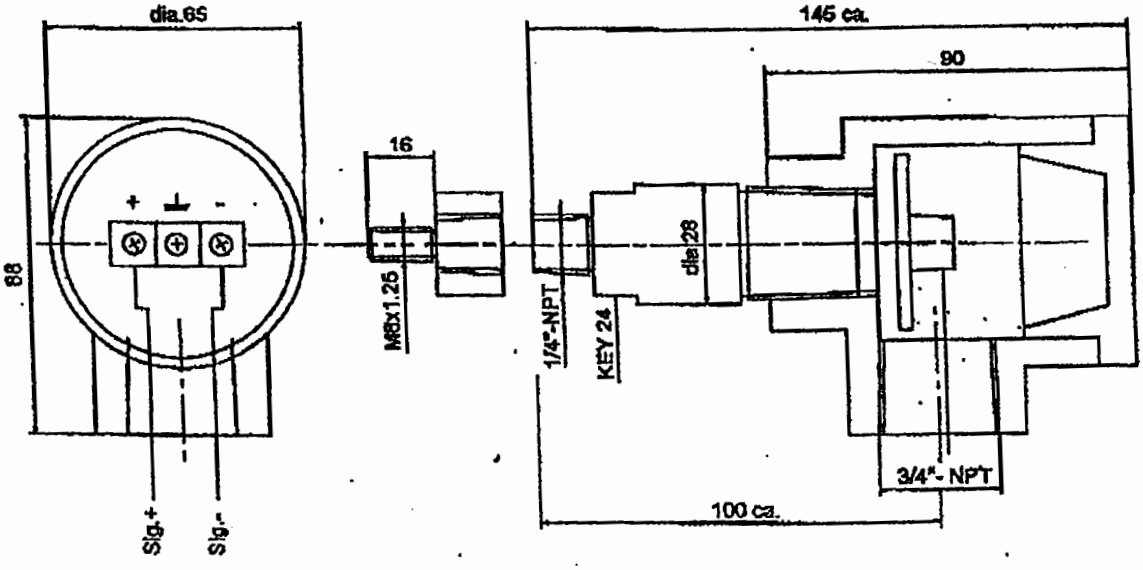

INFORMATION NECESSARY FOR THE ORDER

/ A / B / C / D

TR - I / / / /

A: Type of measure

V velocity RMS
A acceleration RMS

B: Measuring range

0 0 ÷ 10 mm/s RMS
1 0 ÷ 20 mm/s RMS
2 0 ÷ 50 mm/s RMS
3 0 ÷ 100 mm/s RMS
4 0 ÷ 1 g RMS
5 0 ÷ 5 g RMS
6 0 ÷ 10 g RMS
7 0 ÷ 20 g RMS
S special to be defined

C: Fixing accessories

0 standard ¼" NPT
1 M8 x 1.25

D: Cabling output box

0 MIL standards 2 pin connector
1 90° output box thread ¾" NPT female GEXd

TR-I-V-1-1-0 with 5m cable

Example of order

/A/B/C/D

TR - I /V/0/0/1

- D: threaded output ¾" NPT for hazardous area application
- C: standard fixing ¼" NPT
- B: measuring range 0÷10 mm/s RMS
- A: velocity RMS

5 PAC 1012 0AP0.01
JT01 / JT02

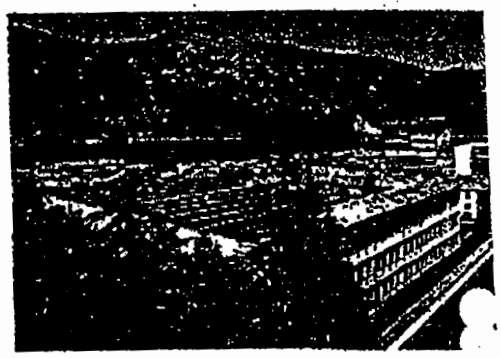

CEMB S.p.A.
Via Risorgimento, 9
23826 MANDELLO DEL LARIO (LC) Italy
www.cemb.com
e-mail: cemb@cemb.com

Vibration analysis division:
phone +39 0341 706111
fax +39 0341 735678
e-mail: stm@cemb.com

CEMB
BALANCING MACHINE

5PAC10120AA002

D-040 COMBINATION AIR VALVE "BARAK" PATENTED

Reliable operation reduces water hammer incidents.

Dynamic design allows high velocity air discharge, up to 0.8 bar differential pressure; Preventing premature closing.

Lightweight, small dimensions, simple and reliable structure.

The body is made of high strength plastic, and all operating parts are made of specially selected corrosion resistant materials.

The drainage outlets enables removal of excess fluids.

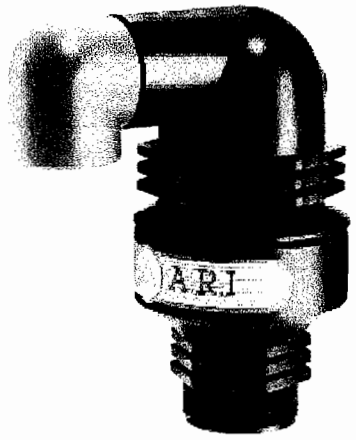

Automatic component

A.R.I patent, Rolling Seal Mechanism:

- Dramatically reduces the possibility of obstruction by debris.
- Discharges high air flow rates upto 160 m^3/h.
- One size orifice for a wide pressure range (up to 16 bar).
- Self cleaning mechanism.

Working pressure range: 3/4", 1": 0.2-10 bar (3-150 psi).

2": 0.2-16 bar (2-230 psi).

Available in 3/4" (20mm), 1" (25mm), 2" (50mm), BSPT/NPT threaded.

Options:

- D-040-T: With a ball valve Tap.
- D-040-P: With Nylon Base or D-040-B: Brass base upon request.
- D-040-VAC: Vacuum check. Available as a valve that will only release air from the system and will not admit air to the system in vacuum condition.

Ordering

Upon ordering, please specify: model, size, working pressure, threads/flanges standard and type of liquid.

ECD0402000

A.R.I **Flow Control Accessories**
Kfar Charuv, 12932 Israel Tel. 972-6-6761988 Fax. 972-6-6763402 http://arivalves.com

5PAC1012OAA002

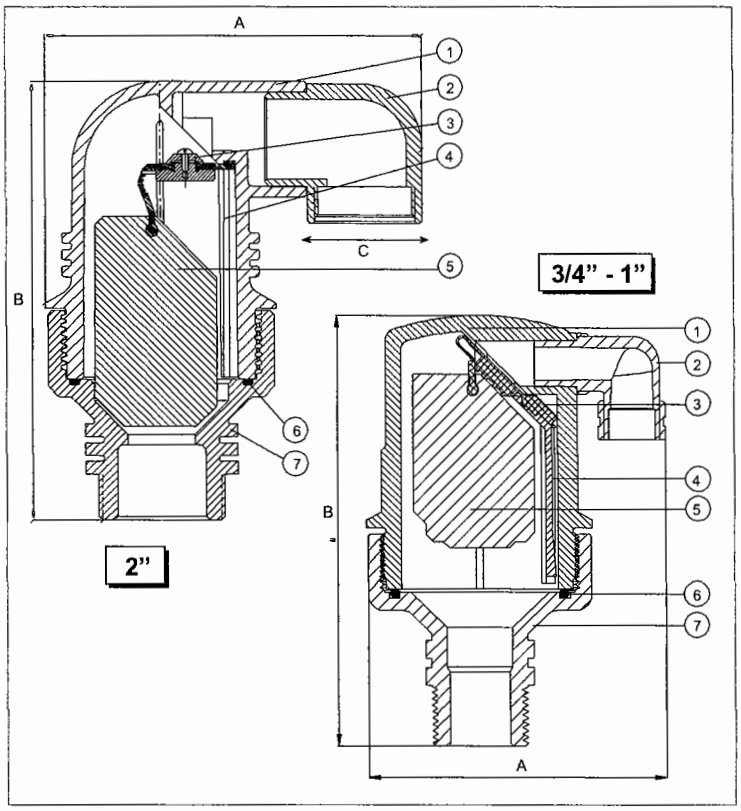

PARTS LIST AND SPECIFICATION

No.	Part	Material
1.	Body	Reinforced Nylon
2.	Drainage Elbow	Polypropylene
3.	Seal Plug Assembly	
4.	Clamping Stem	Reinforced Nylon
5.	Float	Foamed Polypropylene
6.	O-Ring	BUNA-N
7.	Base	Reinforced Nylon
7-01.	Base	Brass ASTM B124
Optional	Ball valve	Brass ASTM B124

DIMENSIONS AND WEIGHTS

Nominal Size	Dimensions mm			Weight	Orifice Area (mm²):	
	A	B	C	Kg	Automatic Valve	Kinetic Valve
2" (50mm)						
D-040 Nylon Base	180	209	1 1/2" BSP	1.1	12	804
D-040 Brass Base	180	209	1 1/2" BSP	2.2	12	804
D-041 with Tap	201	255	1 1/2" BSP	3.5	12	804
3/4" (20mm), 1" (25mm)						
Nylon Base	100	140	3/8" BSP	0.33	7.8	100
Brass Base	100	140	3/8" BSP	0.7	7.8	100

KINETIC AIR FLOW CHART

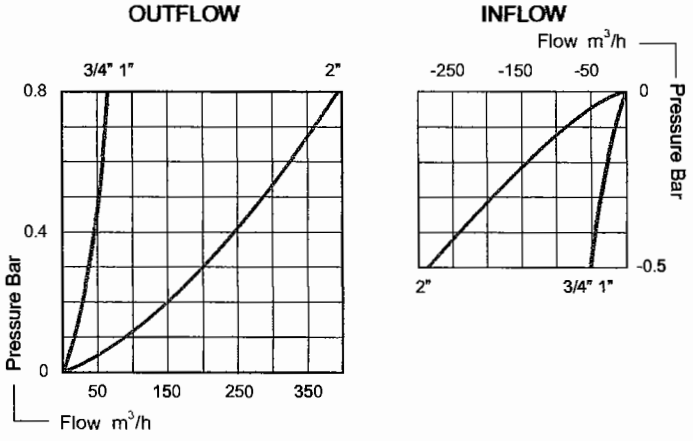

AUTOMATIC AIR DISCHARGE CHART

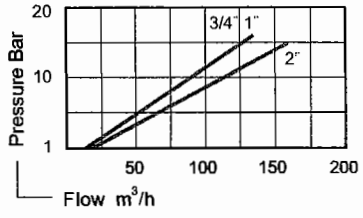

MINCO

SECTION D

STATOR WINDING RESISTANCE TEMPERATURE DETECTORS
for protection of large motors and generators

- RTD's fit between stator windings for continuous protection
- Class B for use to 130°C (266°F); Class H for use to 180°C (356°F)
- Platinum, nickel, or copper elements
- Standard or custom dimensions fit any machine
- Extensive stocking program for urgent requirements

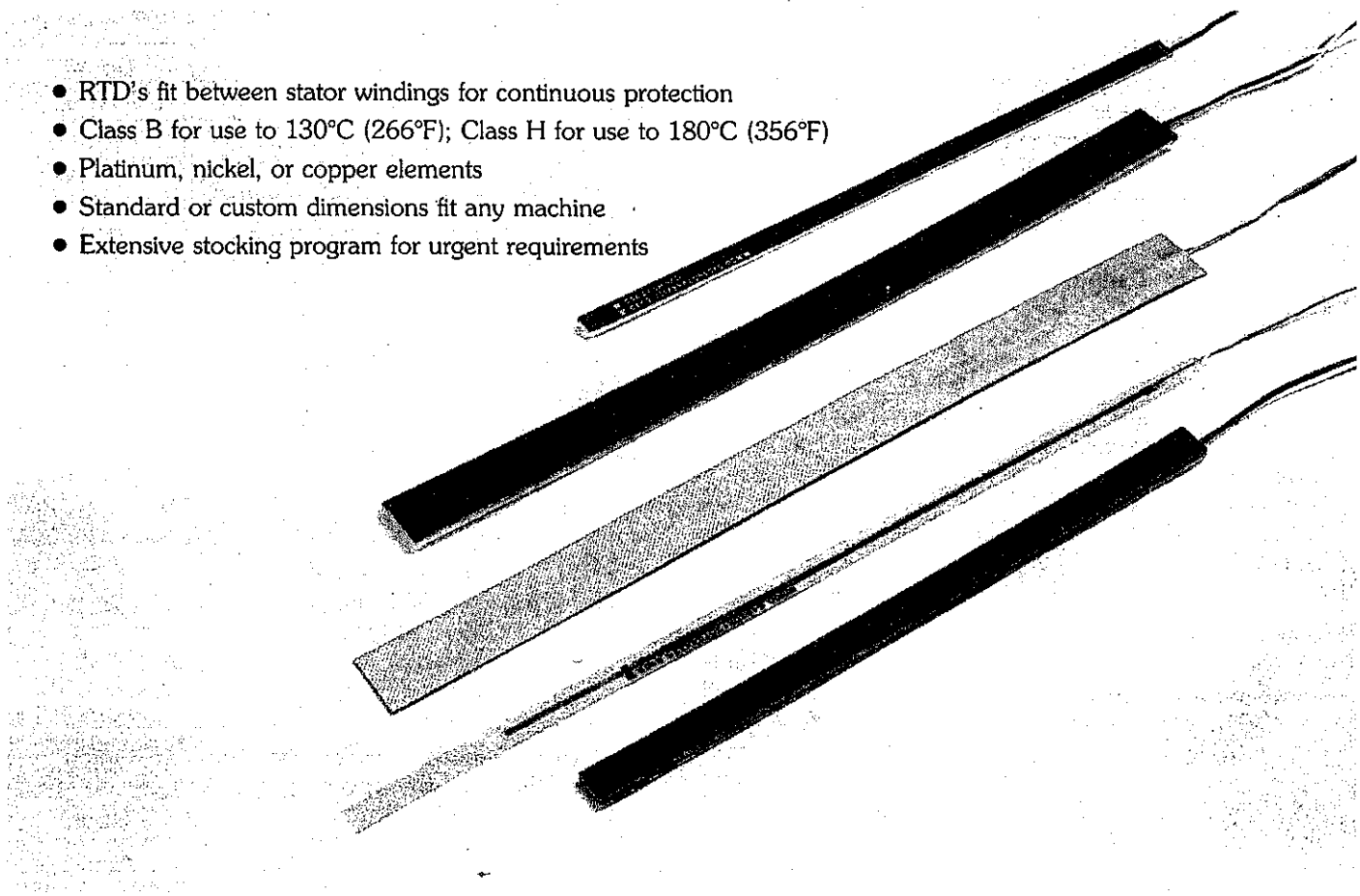

Stator winding temperature detectors, often called "sticks," are flat laminated RTD's (Resistance Temperature Detectors). These detectors are installed in slots between stator windings, near the hottest points, to protect against overheating.

The National Electrical Manufacturers Association (NEMA) recognizes embedded detectors as a standard protection for motor and generator insulation. Because they sense temperature continuously, unlike on-off devices, these detectors can provide early warning of overheating so steps can be taken to prevent possible burnout. Unnecessary tripouts are avoided.

Minco has manufactured stator winding detectors since 1960, and is now the world's leading supplier. Our standard product line offers a complete selection of insulation classes, sensing elements, and dimensions, reducing the need for costly specials. All Minco detectors meet the specifications of ANSI C50.10-1977 for general requirements for synchronous motors.

How to Order

1. Choose an RTD element to match existing instrumentation. Elements are non-inductively wound in long strips to average out temperature gradients.
2. Choose Class B or Class H insulation to match the temperature rating of your motor or generator.
3. Choose Teflon* or Kapton* leadwire. Teflon is less expensive. Kapton offers improved dielectric strength, radiation resistance, abrasion resistance, and less tendency to cold flow under extreme pressure.
4. Find the model with the proper thickness. Determine width and length to fit your stator slot and order by complete part number. Most models are available from stock in standard dimensions and moderate quantities.
5. If catalog models do not meet your requirements, see the list of special design possibilities on page 32. We specialize in custom designs for unique applications.

*Teflon and Kapton are DuPont tradenames.

STATOR WINDING RESISTANCE TEMPERATURE DETECTORS

General Specifications: Stator Winding RTD's

Class	Body Material	Maximum Temperature	Flame Resistance	Impact Strength	Flexural Strength	Dielectric Strength
B	Epoxy Glass	130°C (266°F)	Very Good	Excellent	Good	3200 VRMS
H	Polyester Glass	180°C (356°F)	Excellent	Good	Fair	2000 VRMS
H	Teflon Glass	180°C (356°F)	Very Good	Good	Very Good	3200 VRMS

Dielectric strength is tested at 60 Hz, between leadwires and the external flat body surface for 1 to 5 seconds.

Detector length (inches):
Standard: 6, 10, 11, 12; other lengths from 4 to 30".
Custom: Length is limited only by practical considerations of handling and shipping. Minco has built detectors as long as 20 feet.
Tolerance: Lengths 24 or less: ± .12.
Lengths greater than 24: ±.25.

Detector width (inches):
Standard: .260, .305, .344, .406, .455, .500, .563, .656, .750, .875, 1.00, 1.06, 1.125, and 1.25.
Custom: Other widths available.
Tolerance: Widths .750 or less: +.000/−.020.
Widths greater than .750: +.000/−.040.

Detector thickness (inches):
Standard: .030, .050, .078.
Custom: .094, .125, .188, .250, and other thicknesses.
Tolerance: ±.010 (.030 thick ±.005).

Elements:

Code	Element	TCR (Ω/Ω/° C)
CA	Copper, 10 ± .02 Ω at 25°C	.00427
NA	Nickel, 120 ± .6 Ω at 0°C	.00672
PA	Platinum, 100 ± .5 Ω at 0°C	.00392
PD	Platinum, 100 ± .12 Ω at 0°C	.00385
PE	Platinum, 100 ± .5 Ω at 0°C	.00385

TCR is the Temperature Coefficient of Resistance in Ω/Ω/°C for the range 0 to 100°C. PD elements meet the "international standard" DIN 43760, Class B. PE elements have the same nominal TCR, but looser tolerance for lower cost.

Leads resistance is included in the calibration tolerance of 2-lead models (except PD models) for lead lengths up to 36".

Color coding: All RTD bodies are marked with colored ink to identify element type:
Yellow: Copper.
Red: Nickel.
Blue: Platinum.

Leadwires: Stranded copper with Teflon or Kapton insulation. Other leadwire coverings are available on special order.

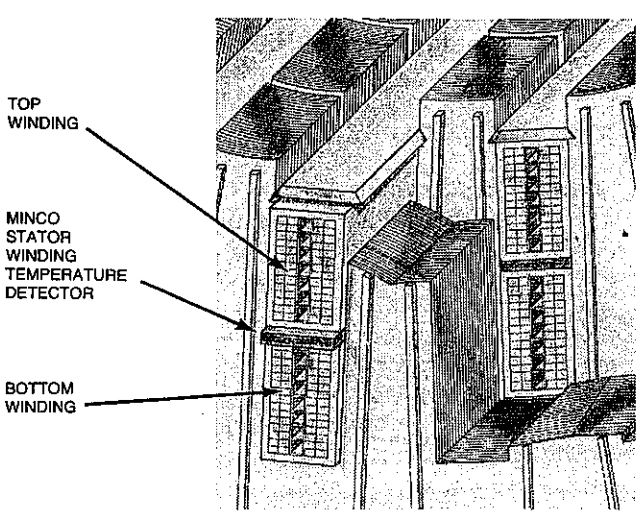

Typical Installation

A cross section through a stator slot shows where a Minco temperature detector is usually installed.

STATOR WINDING RESISTANCE TEMPERATURE DETECTORS

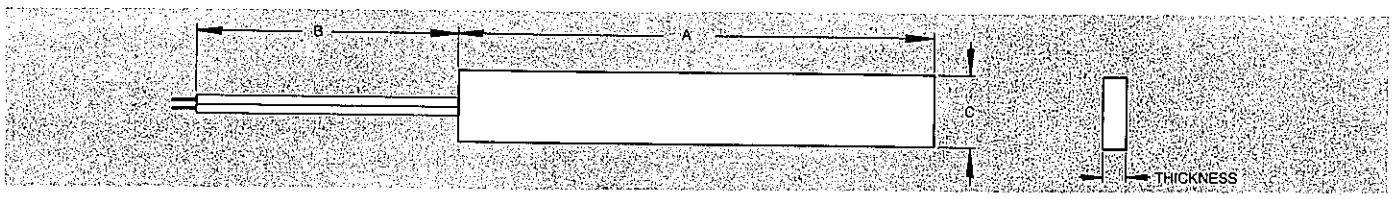

Class B

.078" Thick
Body Material: Epoxy glass.
Leadwires: AWG 22.

Model	Element
S3CA	10 Ω Copper
S4NA	120 Ω Nickel
S11PA	100 Ω Platinum (.00392)
S8011PE	100 Ω Platinum (.00385)

.050" Thick
Body Material: Epoxy glass.
Leadwires: AWG 26.

Model	Element
S23CA	10 Ω Copper
S24NA	120 Ω Nickel
S7682PA	100 Ω Platinum (.00392)
S8013PE	100 Ω Platinum (.00385)

.030" Thick
Body Material: Epoxy glass.
Leadwires: AWG 30.

Model	Element
S1120CA	10 Ω Copper
S1140NA	120 Ω Nickel
S1320PA	100 Ω Platinum (.00392)
S8009PE	100 Ω Platinum (.00385)

Class H

.078" Thick
Body Material: Polyester glass.
Leadwires: AWG 22.

Model	Element
S18CA	10 Ω Copper
S15NA	120 Ω Nickel
S13PA	100 Ω Platinum (.00392)
S8012PE	100 Ω Platinum (.00385)
S11016PD	100 Ω Platinum (.00385)

.050" Thick
Body Material: Teflon glass.
Leadwires: AWG 26.

Model	Element
S7401CA	10 Ω Copper
S7401NA	120 Ω Nickel
S7401PA	100 Ω Platinum (.00392)
S8014PE	100 Ω Platinum (.00385)

.030" Thick
Note: These detectors are .045" thick over the leads attachment area. This area extends into the body a maximum of .62".
Body Material: Teflon glass.
Leadwires: AWG 30.

Model	Element
S1220CA	10 Ω Copper
S1240NA	120 Ω Nickel
S1420PA	100 Ω Platinum (.00392)
S8010PE	100 Ω Platinum (.00385)

How to Order Stator Winding RTD's

S3CA 245 T 344 Z 36 Sample part number

- 36 — Leadwire length B in inches
- Z — Y = 2 leads; not available with CA or PD elements; Z = 3 leads
- 344 — Width C in .001" increments. Example: 344 = .344". Specify standard widths when possible
- T — Insulation over leadwires: T = TFE Teflon; K = Kapton
- 245 — Length A in .1" increments. Example: 245 = 24.5"
- S3CA — Model number; specifies element type, insulation class, thickness, and leadwire AWG

Stator Detectors

STATOR WINDING RESISTANCE TEMPERATURE DETECTORS

Special Models Available

In addition to the standard models described in this bulletin, Minco can supply:

- Thermocouples with E, J, K, or T junctions in equivalent sizes and styles.
- Special RTD elements. Options include platinum to Ontario Hydro or SAMA specifications, or nickel to meet DIN 43760.
- Dual element sticks. Elements may be identical, or we can incorporate two different elements within the same detector body.
- Greater dielectrics. Contact us if standard models do not meet your dielectric strength requirements.
- Semi-conductive surface coating to shield RTD's from electric fields.
- Detector bodies with holes or cutouts for mounting.
- Special testing. For example, we test one model for dielectric strength at 8000 VAC while subjecting it to 200 psi pressure. Electrical and environmental testing is available to meet stringent quality specifications.

Contact us with your special application requirements.

Other Minco Products for Motor and Generator Protection

Contact Minco for all your temperature instrumentation needs. In addition to stator winding detectors, we offer:

- Flexible Thermal-Ribbon™ resistance thermometers for small motors or retrofit installations.
- Tip-sensitive RTD or thermocouple probes for bearing protection.
- Miniature temperature detectors for embedment in the babbitt layer of large bearings.
- Three-channel temperature alarms for continuous protection. Featuring RTD input, these alarms have three setpoints for versatile control. The first setpoint controls cooling fans, the second setpoint sounds an alarm, and the third shuts the machine down.
- Miniature two-wire transmitters to provide a standard 4 to 20 mA signal to remote instrumentation.
- Digital and analog readouts with RTD input.
- Etched-foil strip heaters for anti-condensation protection.

When quality and performance are as important as price, call. . .

MINCO PRODUCTS, INC.

7300 Commerce Lane/Minneapolis, Minnesota 55432 U.S.A.
Telephone: (612)571-3121/TWX: 910-576-2848/FAX: (612)571-0927

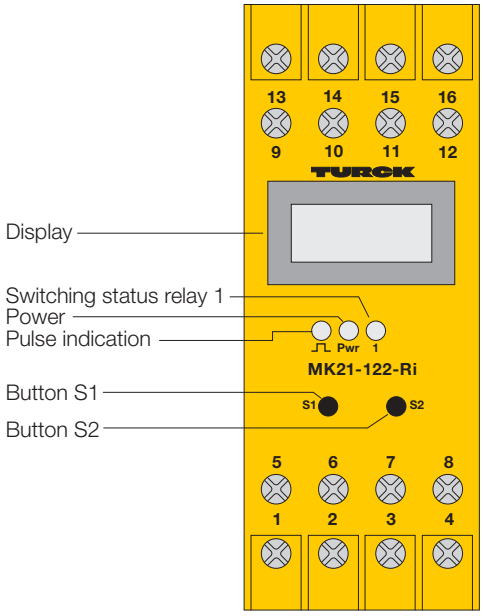

Rotational Speed Monitor with Frequency-Current Converter MK21-122-Ri 1-channel

2

- **1-channel rotational speed monitor with frequency-current converter**
- **Overspeed and underspeed detection plus window function**
- **For use with sensors according to EN 60947-5-6 (NAMUR), 3-wire sensors and external signal sources with a pulse level 5...30 VDC**
- **Line monitoring of NAMRUR sensors**
- **Detection range 1 mHz...10 kHz (0.06...600 000 pulses/min[1])**
- **Simple menu-guided parameterisation**
- **Full galvanic isolation**
- **Relay output with one SPDT contact**
- **Analogue current output: 0...20 mA / 4...20 mA**
- **Potential-free pulse output**
- **Universal supply voltage (20...250 VUC)**

The MK21-122-Ri is a rotational speed monitor designed to monitor pulse sequences from rotating shafts on motors, gears, turbines etc., for overspeed and underspeed conditions relative to pre-adjusted limit values. The analogue output provides a current signal proportional to the rotational speed for further processing. A display located on the front cover indicates the actual speed.

Sensors per EN 60947-5-6 (NAMUR), 3-wire sensors or external signal sources may be used for signal detection. Line monitoring for short-circuit and/or wire-break conditions can be adjusted when using NAMUR sensors. If there is an error in the input circuit, the relay de-energises, the analogue outputs goes to either 0 mA or 24 mA (depending on setting) and the yellow pulse LED changes to red. 3-wire pnp sensors can be powered with 12 V (≤ 20 mA) by the rotational speed monitor. External signal sources must have a signal range from 5...30 VDC. The potential-free pulse output provides the input signal for additional processors.

To provide fast response times for applications with relatively low speed, the device operates on a digital pulse principle. High speed monitoring is based on a time window. In low-speed applications, the response time depends on the pulse period.

Device parameterisation is accomplished with two push buttons. The settings are indicated via the display. The relay output can be programmed for overspeed or underspeed detection, or a window function, or a combination of both. The switching hysteresis is defined by the adjustable switch ON and OFF points.

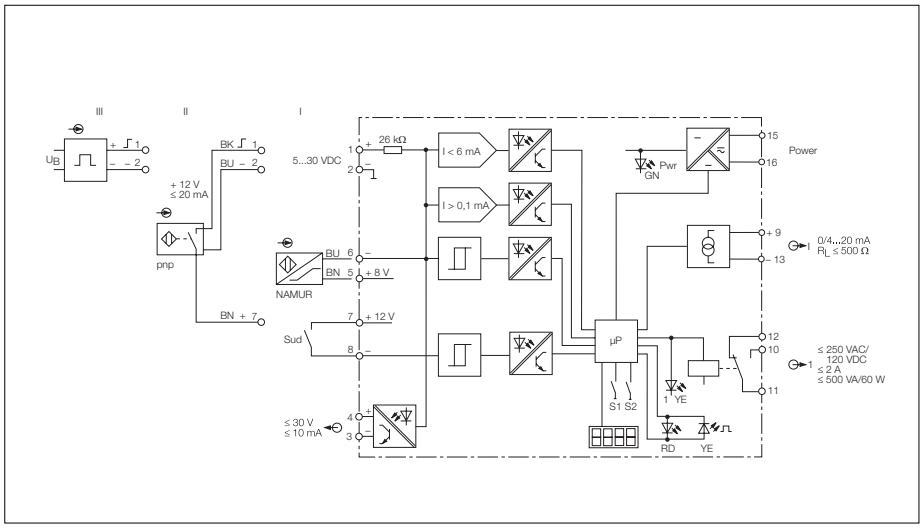

Rotational Speed Monitor MK21-122-Ri

The relay operates in the normally open mode; i.e. the relay is energised if the speed is within the acceptable range. The relay may also be used as an alarm output. The relay will then de-energise if there is an input circuit error or a power failure.

In the underspeed monitoring mode, it is possible to adjust a start-up time delay (AU-time) during which the output relay is constantly energised. Consequently underspeed indications are inhibited during system start-up. The start-up time delay is activated by linking terminals 7 and 8 or by applying power to the device after the terminals have been linked.

The upper und lower range value can be freely adjusted. Within the measuring range (selectable ranges 0...20 mA or 4...20 mA), the frequency is converted linearly into a current value. A damping time, during which the current output follows a change of frequency with a defined delay, is adjustable.

The actual speed and the limit value settings are displayed in Hz. By adjusting a time basis and programming the number of pulses per rotation, it is possible to adjust all settings and the display to the required measuirng unit. Suppose, the display should be in min^{-1} instead of Hz, the time-based factor adjustment would be 60.

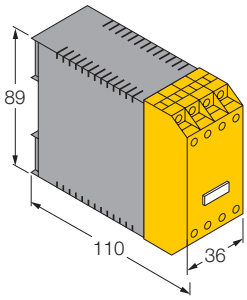

Type	MK21-122-Ri
Ident-no.	7543056
Supply voltage U_B	20...250 VUC
Line frequency (AC)	40...70 Hz
Power consumption	≤ 2.5 W
Galvanic isolation	between input circuit, output circuit and supply voltage for 250 V_{rms}, test voltage 2.5 kV_{rms}
Rotational speed monitoring	underspeed/overspeed
Monitoring range/adjustable range	0.06...600 000 min^{-1} (digitally adjustable)
– Input frequency	≤ 1 200 000 min^{-1} (20 kHz)
Pulse duration	≥ 0.02 ms
Pulse pause	≥ 0.02 ms
Start-up time delay	0…1000 s (adjustable)
Input circuits	
NAMUR input	to EN 60947-5-6, (NAMUR)
– Operating values	U_0 = 8.2 V; I_k = 8.2 mA
– Switching threshold	1.55 mA
– Switching hysteresis	0.2 mA
– Wire-break threshold	≤ 0.1 mA
– Short-circuit threshold	≥ 6 mA
3-wire sensor	
– Voltage	12 V
– Current (sensor no-load current)	≤ 20 mA
External signal source	
– 0-Signal	0...3 V
– 1-Signal	5...30 V
– Input resistance	26 kΩ
Output circuits	1 relay
Relay output	1 SPDT contact
– Switching voltage	≤ 250 V
– Switching current	≤ 2 A
– Switching capacity	≤ 500 VA/60 W
– Switching frequency	≤ 5 Hz
– Contact material	Ag-alloy + 3 µm Au
Analogue output	
– Current source	0/4...20 mA
– Load	≤ 500 Ω
Pulse output	
– External voltage	< 30 V
– Current	≤ 10 mA
LED indications	
Power	green
Switching status	2 x yellow
Pulse indication (dual colour LED)	yellow – error: red
Display	LCD-Display (four digits)
Housing	16-pole, 36 mm wide, Polycarbonate/ABS flammability class V-0 per UL 94
Mounting	panel mounting or snap-on clamps for top-hat rail (DIN 50022)
Connection	screw terminals with self-lifting pressure plates
Connection profile	≤ 2 x 2.5 mm^2 or 2 x 1.5 mm^2 with wire sleeves
Protection degree (IEC 60529/EN 60529)	IP20
Temperature range	-25…+60 °C

 Hans Turck GmbH & Co.KG • D–45466 Mülheim/Ruhr • Tel. 0208/4952-0 • Fax 0208/4952-264 • E-Mail: turckmh@mail.turck-globe.de • www.turck.com

Motor
Manual

Project:

LAVRION V-CCPP
DMKT 11 21 302

Title: Operation & Maintenance Manual (Motor)

Circulating Water Pumps (5PAC10/20 AP001)

Supplier Document No:	-	Issue: 0
KKS Document No:	5-PAC-GMP-FPD-261	
Purpose of issue: For Information		Date: 29/12/04

00-Y-X-10302-F3/I Issue 1

Prepared: LM

Reviewed: DP

Approved: MM

TECO–Westinghouse

THREE-PHASE INDUCTION MOTORS

OPERATION AND MAINTENANCE MANUAL

3A057D872-E Rev. 03

1 INTRODUCTION

This and the following instructions address the more common situations encountered in motor installation, operation and maintenance. For the TECO motor warranty to be and to remain in effect, the motor must be installed and operated in strict accordance with the outline drawing, motor nameplates and these instructions, and must not be altered or modified in any unauthorised manner.

During the installation and operation of motors in heavy industrial applications there is a danger of live electrical parts and rotating parts. Therefore to prevent injury and/or damage the basic planning work for installation, transportation, assembly, operation, etc... needs to be done and checked by authorised and competent personnel only.

Since these instructions cannot cover every eventuality of installation, operation and maintenance, the following points should be considered and checked:

- The technical data and information on permissible use such as assembly, connection, ambient and operating conditions given in the related catalogue, operating instructions, nameplates and other production documentation.
- The general erection and safety regulations.
- The local and plant-specific specifications and requirements.
- The proper use of transport, lifting devices and tools.
- The use of personal protective equipment.

The following indications should be observed when reading these instructions.

Safety instructions are marked as follows:

Warning of electric hazards for personnel

Warning of dangers for personnel

ATTENTION!

Warning of damage to the motor or installation.

2 ACCEPTING, INSPECTION, STORAGE, TRANSPORTATION

2.1 Inspection upon receipt

Check the following points upon receipt:

- Are the nameplate ratings identical with what was ordered?
- Are dimensions and colour in compliance with your specifications?
- Are the nameplate ratings for space heater, thermal protector, temperature detector, etc. identical with what was ordered?
- Is there any damage?
- Are all accessories and accompanying instruction manuals in good order?
- Does the arrow head indicator indicate the correct direction of rotation?
- If there are any specific requirements, please ensure they are in conformance with the specifications.

2.2 Storage

When motors are not in operation, the following precautions should be undertaken:

2.2.1 Location

(a) Store in a dry, well ventilated environment, without direct sun, dust or corrosive gas.

(b) Do not store near to a boiler or freezer.

(c) Area to be entirely free from vibration and with easy access.

(d) Motors should be stored on pallets to prevent moisture.

(e) Motors should be well-shielded from dust, but well-ventilated.

2.2.2 Moisture prevention

Moisture can be very detrimental to electrical components. The motor temperature should be maintained about 3°C above the dew point temperature by providing either external or internal heat.

If the motor is equipped with space heaters, they should be energized at the voltage shown by the space heater nameplate attached to the motor.

Incandescent light bulbs can be placed within the motor to provide heat. However, if used, they must not be allowed to come in contact with any parts of the motor because of the concentrated hot spot that could result.

2.2.3 Insulation resistance

The insulation resistance should be kept above the specified values.

(a) For measurement of insulation resistance and acceptable standard values, please refer to measures stated in 4.1.2 “Measurement of insulation resistance”.

(b) Insulation resistance test should be performed once every three months.

2.2.4 Motor not in operation

If the motor is not in operation for a long period (one week and above) after installation, or has been in operation but stopped for a period of time, the following precautions must be taken.

(a) Protect the motor as stated in 2.2.1.

(b) Insulation resistance test should be performed as stated in 2.2.3.

2.2.5 Bearing protection

(a) General:
If the motor has been provided with a shaft shipping brace to prevent shaft movement during transit, it must be removed before operating the motor. It is very important that this brace be re-installed exactly as it was originally, before the motor is moved from storage,

or any time when the motor is being transported. This prevents axial rotor movement that might damage the bearings.

(b) Sleeve Bearings:
Motors equipped with sleeve bearings are shipped from the factory with the bearing oil reservoirs drained. In storage, the oil reservoirs should be properly filled to the center of the oil level gauge with a good grade of rust inhibiting oil. To keep the bearing journals well oiled and to prevent rusting, the motor shaft should be rotated several revolutions every month ensuring the shaft does not come to rest in its original position. While the shaft is rotating, it should be pushed to both extremes of the endplay.

(c) Anti-friction Bearings:
Motors with anti-friction bearings are properly lubricated with the correct grade of grease at the factory and no further greasing is required in storage. The shaft should be rotated several revolutions every month to maintain proper distribution of the grease within the bearings.

(d) Tilting-pad bearings:
These are a type of sleeve bearing used in special design applications. Due to the nature of this bearing, a loose oil ring for delivering lubricant cannot be provided.
Therefore, during storage, oil must be periodically manually introduced into the pads and housing to prevent the occurrence of oxidation of the precision machined components.

(1) Remove the pipe plug from the bearing cap located above the tilt-bearing shell.
(2) Pour in approximately one cup of oil every month and rotate the shaft a few revolutions every two (2) weeks.
(3) For long periods of storage, the oil that accumulates in the housing should be removed.

2.2.6 Damage and rusting

ATTENTION!

Care should be taken to keep parts such as fitting surfaces, key, shaft extension and axial central hole free from foreign matter. Grease should also be generously applied to prevent rusting.

2.3 Transportation

To keep the rotating parts of motors from moving, thus preventing damage and scratching during transportation, they should be held securely with a locking device. Remove all transit clamps before operating the motor. It is very important that this device be re-installed exactly as it was originally, before the motor is moved from storage or any time when the motor is being transported. Vertical mounting motors should be transported in the vertical position

Do not use the hoisting hook/eyebolts to lift more than the motor itself as they are designed to support the motor only. Make sure the hoisting hook is correctly attached and that the eyebolt(s)/lug(s) are fully screwed in before hoisting. Also note such parts as fan cover, ventilation box, bracket, slip-ring, etc. may have their own hoisting lugs which can only carry their own weight. Nothing extra should be attached while hoisting.
Do not twist the steel wires and make sure the eyebolts have been firmly screwed and the sling angle is correct.

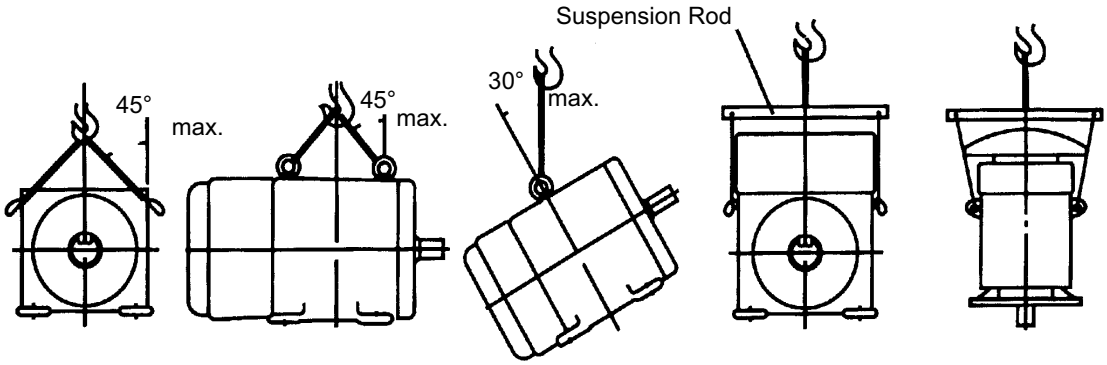

Fig. 1

3 INSTALLATION

3.1 Site and environment for motor installation

3.1.1 General

Standard environment and site conditions for the installation of motors are usually set as follows:

(a) Ambient temperature: -10~40ºC

(b) Relative humidity: below 90%RH for totally enclosed types, and below 80%RH for semi-enclosed types.

(c) Elevation: below 1000 metres or 3300 feet.

(d) Harmful gases, liquids, dusts, and high moisture should be absent.

(e) Foundations should be rigid and free of vibration.

If there are any special environmental conditions, please inform TECO prior to ordering.

3.1.2 Ventilation and space

(a) Installation area should be well ventilated.

(b) The installation space should be large enough to facilitate heat dissipation and maintenance.

3.2 Horizontal Motors

3.2.1 Foundation

Use rigid and solid sole plate or common bed as foundation.
For best motor performance, it is advisable to use a sole plate or common bed, particularly when using a shaft coupling (Fig. 2).

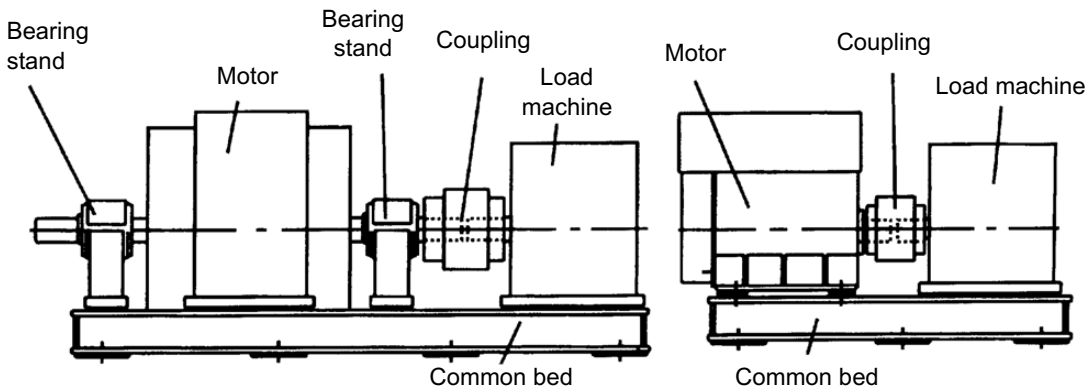

Fig. 2

3.2.2 Installation

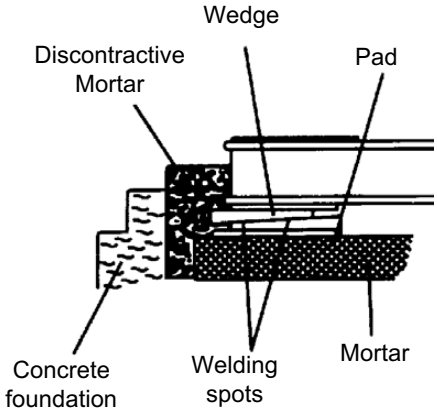

Fig. 3

(a) Select an appropriate foundation surface for the sole plate or common bed, which will be considered the ultimate level.

(b) Align the position of the common bed with reference to that level.

(c) Align the level accuracy at a minimum of four points such as bearing mounting, shaft extension etc. The accuracy should be within 0.04mm or 0.0015 inches

(d) The sole plate or common bed should be embedded in concrete foundation as illustrated in Fig. 3. Stiff pads should also be installed beneath the wedges, which are welded together at various spots about 400-500mm (15.75-19.70 inches) apart etc., to enable the foundation to carry evenly the weight of the whole motor.

(e) The base should be sturdy and rigid to keep it flat and level.

(f) Make sure the mortar and concrete are completely dry, and the precision of the level is acceptable, and then set the motor on the mounting foundation.

(g) Accurately install shaft couplings, belt sheaves etc., then weld the wedges solid to prevent untoward change in position.

3.3 Vertical Motors

3.3.1 Foundation

(a) The foundation of motor/pump must be rigid and secure to provide adequate support. There must be no vibration, twisting, misalignment etc. due to inadequate foundations.

(b) A massive concrete foundation is preferred in order to minimize vibration. Rigidity and stability are enhanced by prop plate and foundation bolt, as shown in Fig. 4.

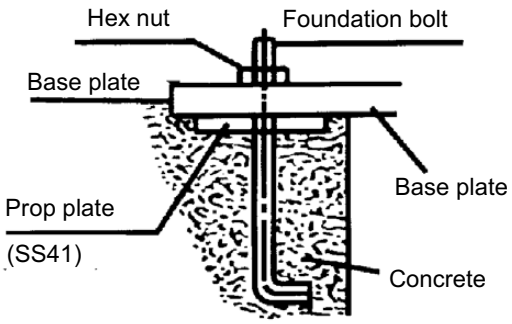

Fig. 4

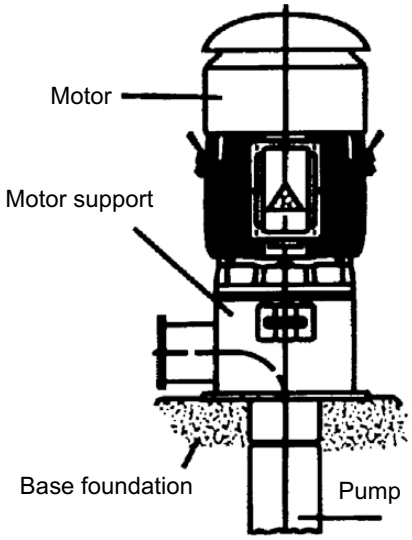

Fig. 5

3.3.2 Installation

(a) All mounting surfaces must be clean and level.

(b) Foundation must be leveled at a minimum of 4 points and guaranteed to be below 0.04mm (.0015 in.) flat and level.

(c) Make sure the mortar and concrete are completely dry, and the precision of the level is acceptable, and then set the motor on the mounting foundation.

(d) Accurately install shaft couplings.

3.4 Installation of shaft coupling

3.4.1 General

ATTENTION!

Motors must always be accurately aligned, and this applies especially where they are directly coupled.
Incorrect alignment can lead to bearing failure, vibration and even shaft fracture. As soon as bearing failure or vibration is detected, the alignment should be checked.

Field application of a coupling to the motor shaft should follow the procedures recommended by the coupling manufacturer. The motor shaft extension must not be subjected to either extreme heat or cold during coupling installation.

ATTENTION!

The coupling should be heated and pushed onto the shaft extension with slight axial force. To prevent bearing damage do not hammer coupling.

3.4.2 Motors with sleeve bearings

Although the sleeve bearings are equipped with thrust faces, these are intended only to provide momentary axial restraint of rotor movement either during start-up or when operating the motor disconnected from the driven equipment. They must not be operated under a constant thrust load unless they were originally designed for this condition.

3.4.3 Coupling type

Motors with either sleeve or anti-friction bearings are suitable for connection to the driven load through a flexible coupling. Coupling solidly to the load is not acceptable. With sleeve bearings, the flexible coupling should be of the limited end float type to prevent the possibility of any end thrust from load being transmitted to the motor bearings, which could cause bearing damage. The recommended limits of end float are as follows:

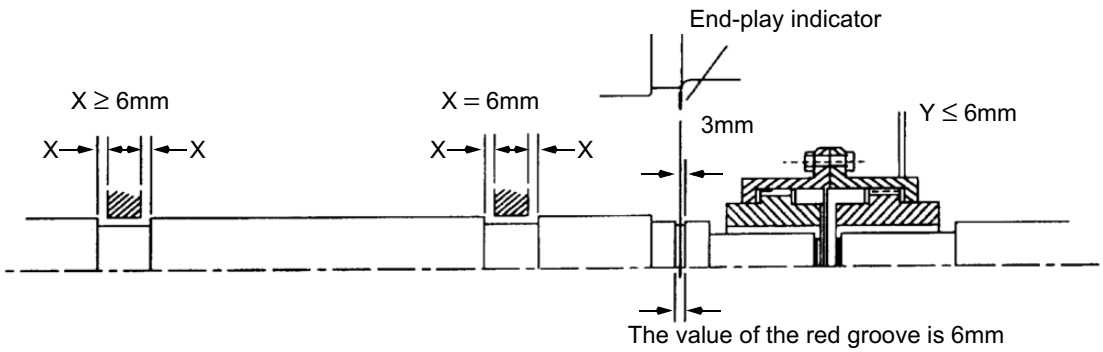

Fig. 6

(a) When the motor is in operation after installation, be sure that the end-play indicator is within the 6mm (0.236 in.) of the groove on the shaft or aligned to the shaft shoulder immediately outboard of the drive-end bearing. This is to ensure there is low friction between shaft and bearing.

(b) Unless otherwise specified, the designed end-play value X of the groove for TECO motors in general is within 6mm (0.236 in.) as illustrated in Fig. 6. In essence, the endplay indicator is adjusted to point at the center of the groove or the drive-end shaft shoulder; thus X equals to 6±1mm or so, and the endplay value (Y) of the couplings should equal or be smaller than 3mm (0.118 in.).

(c) If the desired value Y is greater than 3mm (0.118 in.) caused for instance by a thrust load and/or load machine with large end-play, please inform TECO prior to ordering.

3.4.4 Motor alignment

In aligning the motor (and rotor) axially with the driven equipment, consideration should be given not only to the endplay indicator position but also to axial shaft expansion and increase in shaft centerline height due to thermal effects. In general, the axial shaft growth for motors can be disregarded since neither bearing is fixed and any shaft growth due to temperature increase will produce an elongation away from the coupling.

Shaft height growth (change in shaft centerline elevation) for TEFC machines can be calculated as follows:

$$\Delta = (0.0005) \times \text{(motor foot to shaft centreline dimension)}$$

For non-TEFC machines, divide the number by 2.

3.4.5 Magnetic centre

It is desirable, in normal operation, that the motor operates on its magnetic center, so that no axial force is exerted on the coupling.

The motor shaft and the driven shaft should be aligned within the following tolerances in both angular and parallel alignment:

(Units: mm)

TIR	Range of rotating speed	Solid coupling	Flexible coupling
C	2500 rpm and above	0.03	0.03
	Below 2500 rpm	0.04	0.05
A	2500 rpm and above	0.03	0.03
	Below 2500 rpm	0.03	0.04

Angular misalignment is the amount by which the centrelines of driver and driven shafts are skewed. It can be measured using a dial indicator set up as shown in Fig. 7. The couplings are rotated together through 360 degrees so that the indicator does not measure runout of the coupling hub face. The shafts should be forced against either the in or out extreme of their end float while being rotated.

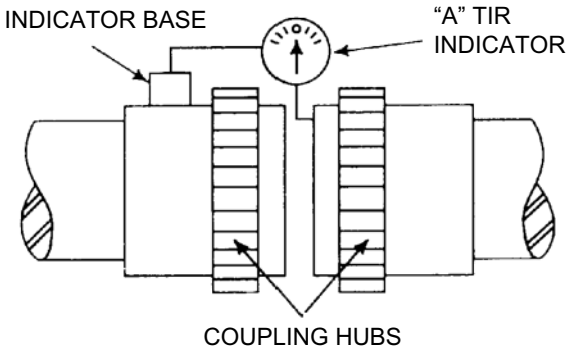

TIR=Total indicator reading (by dial indicator)

Fig. 7

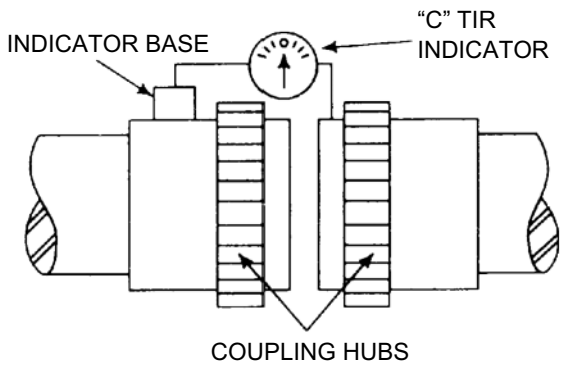

Fig. 8

Parallel misalignment is the amount by which the centrelines of the driver and driven shafts are out of parallel. It can be measured using a dial indicator set up as shown in Fig. 8. Again, the couplings are rotated together through 360 degrees so that the indicator does not measure runout of the coupling hub outside diameter.

3.4.6 Installation of dowel pins

After the motor has been properly aligned with the driven equipment and the holding-down bolts have been installed and tightened, for motors with fabricated frames, at least two dowel pins should be installed in two diagonally opposite motor feet.

3.4.7 Installation of shaft coupling (Vertical hollow shaft motor only)

Bolted Coupling as shown in Fig. 9.

(a) Bearings are provided to absorb some upward shaft thrust when the coupling is fitted.

(b) The coupling is fastened with bolts.

(c) This coupling type is not auto-release type.

Note: Standard high-thrust motors can absorb momentary up-thrust load up to 30% of the standard down-thrust load. If the up-thrust is long in duration (over 10 Seconds) and/ or exceeds 30% of the standard high-thrust rating, special design arrangements are required and standard motor is not suitable.

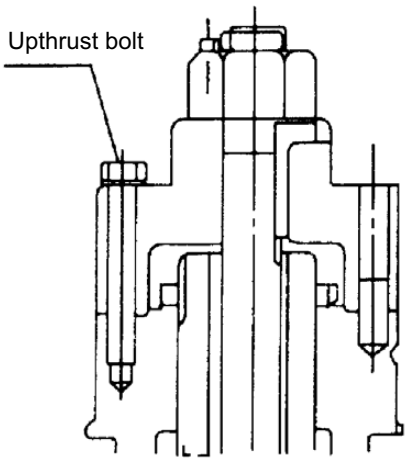

Fig. 9

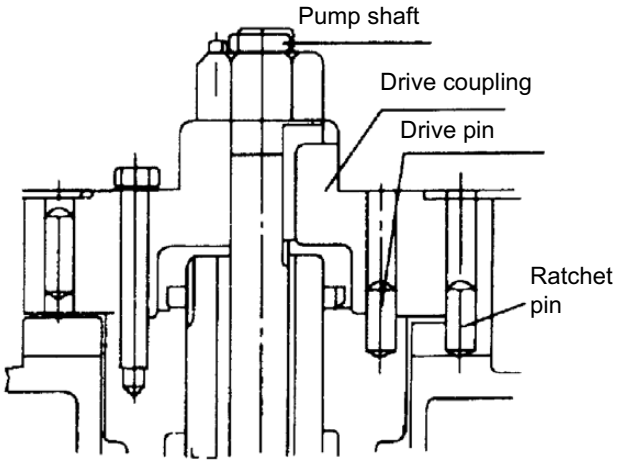

Fig. 10

3.4.8 Non-reverse ratchet/coupling, as Fig. 10 (If fitted)

(a) The non-reverse coupling is also a bolted type and:

- it prevents the pump and motor from rotating in the reverse direction.
- it prevents damage from over-speeding.
- it prevents damage to pump shaft and bearings.
- the ratchet pins are lifted by the ratchet teeth and are held clear by centrifugal force and friction as the motor comes up to speed.
- when power is removed, speed decreases, and the pins fall. At the instant of reversal, a pin will catch in a ratchet tooth and prevent backward rotation.

(b) When installing the non-reverse coupling, do not use lubricant. Lubricant will interfere with proper operation. The top half of the coupling should sit solidly on the lower half and the pins should touch the bottom of the pockets between the teeth in the plate.

(c) As with the bolted coupling, the up-thrust capabilities are 30% of the standard high-thrust rating for down-thrust.

ATTENTION!

Do not apply non-reverse ratchets on applications in which the pump reversal time from shutdown (the instant the stop button is pressed) to zero speed is less than one second.

3.5 Installation for belt drive

In general, power transmission though direct flexible coupling is appropriate for large motors. Such motors are not suitable for belt, chain or gear connection unless specially designed for such service. However, for small and medium motors with outputs within the ranges shown on table below, it is acceptable to use belt transmission as indicated. Beyond these ranges, do not apply belt sheaves unless specially designed.

The diameter ratio between conveyance sheaves should not be greater than 5 to 1 for flat belts, and 8 to 1 for V-belts. It is also advisable to limit the belt velocity to under 35m/sec (115 ft/sec) to limit belt abrasion and vibration. The smaller the outer diameter of the V-belt sheave, the greater the shaft bending stress will be. If the bending stress is in excess of the shaft fatigue stress, the shaft may break. Therefore, please inform TECO when you have decided the size of the sheaves and the length of the belts.

ATTENTION!

Place the sheave and belt as close as possible to the motor body (it is advisable to make x as shown in equal to 0) to reduce the bending moment and improve shaft life.

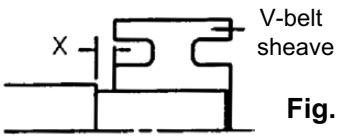

Fig. 11

3.5.1 Table of belt-sheave application for general electric motors

Output (KW/HP)			V-Belt Sheave							
			Conventional V-Belts				Narrow V-Belts			
4P	6P	8P	V-Belt Type	Number Of Belts	Min. PCD (mm)	Max Width (mm)	V-Belt Type	Number Of Belts	Min. PCD (mm)	Max Width (mm)
11/15	-	-	B	4	160	82	3V	4	125	48
-	11/15	-	B	5	170	101	3V	5	140	59
-	-	11/15	B	5	190	101	3V	6	160	69
15/20	-	-	B	5	170	101	3V	6	125	69
-	15/20	-	B	5	224	101	3V	6	160	69
-	-	15/20	C	4	224	111	5V	3	180	60
18.5/25	-	-	B	5	200	101	3V	6	140	69
-	18.5/25	-	C	4	224	111	5V	3	180	60
-	-	18.5/25	C	5	224	136	5V	4	180	78
22/30	-	-	B	5	224	101	5V	6	160	69
-	22/30	-	C	5	224	136	3V	4	180	78
-	-	22/30	C	5	250	136	5V	4	200	78
30/40	-	-	C	5	224	136	5V	4	180	78
-	30/40	-	C	5	265	136	5V	4	224	78
-	-	30/40	C	6	265	162	5V	5	224	95
37/50	-	-	C	6	224	162	5V	4	200	78
-	37/50	-	C	6	265	162	5V	4	224	78
-	-	37/50	C	7	280	187	5V	5	250	95
45/60	-	-	C	6	265	162	5V	4	224	78
-	45/60	-	C	7	280	187	5V	5	224	95
-	-	45/60	C	7	315	187	5V	6	250	113
55/75	-	-	C	7	265	187	5V	5	224	95
-	55/75	-	C	8	300	213	5V	6	250	113
-	-	55/75	D	5	355	196	5V	6	280	113
75/100	-	-	C	8	315	213	5V	6	250	113
-	75/100	-	D	6	355	233	5V	6	315	113
-	-	75/100	D	6	400	233	5V	6	355	113
-	90/120	-	D	6	400	233	5V	6	355	113
-	-	90/120	D	6	425	233	8V	4	355	124
-	110/150	-	D	7	400	270	8V	4	355	124
-	132/175	110/150	D	7	450	270	8V	4	400	124
-	160/200	132/175	D	9	450	344	8V	4	450	124

3.6 Conveyance with chain or gear

(a) Make sure the loading capacity of shaft and bearings is appropriate for the size and installation position (overhung) of chain and gear. If necessary, please contact us to ensure the shaft and bearings will meet your requirements.

(b) Pay close attention to ensure the parallelism of shafts.

(c) The teeth of couplings should be correctly and precisely matched; the force conveyance centers should lie on the same line.

(d) There should be no skip, jumping, vibration or unusual noises.

ATTENTION!

Do not hammer the conveyance devices such as couplings, belt sheaves, chain wheels, gears etc. onto the shaft. These shaft fitments should be fitted and removed only by means of suitable devices. Heat shrinking may be a better alternative to avoid damaging bearings and components.

The exposed rotating parts should be covered to prevent accidents

3.7 Electrical connections

All interconnecting wiring for controls and grounding should be in strict accordance with local requirements such as the USA National Electrical Code and UK IEE wiring regulations. Wiring of motor and control, overload protection and grounding should follow the instructions of connection diagrams attached to the motor.

3.7.1 Power

The rated conditions of operation for the motor are as shown on the nameplate. Within the limits given below, of voltage and frequency variation from the nameplate values, the motor will continue to operate but with performance characteristics that may differ from those at rated conditions:

±10% of rated voltage
±5% of rated frequency
±10% combined voltage and frequency variation provided the frequency variation is no more than ±5% of rated.

Operating the motor at voltages and frequencies outside of the above limits can result in both unsatisfactory motor performance and damage to, or failure of, the motor.

3.7.2 Terminal box size

The main terminal box furnished with the motor has been sized to provide adequate space for the make-up of the connections between the motor lead cables and the incoming power cables.

The bolted joints between the motor lead and the power cables must be made and insulated in a workman-like manner following the best trade practices.

3.7.3 Grounding

Motors are provided with grounding pads or bolts.

The motor must be grounded by proper connection to the electrical system ground.

3.7.4 Rotation

The rotation direction of the motor will be as shown by either a nameplate on the motor or on the outline drawing. The required phase rotation of the incoming power for this motor rotation may also be stated. If either is unknown, the correct sequence can be determined in the following manner:

While the motor is uncoupled from the load, start the motor and observe the direction of rotation.

Allow the motor to achieve full speed before disconnecting it from the power source.

Refer to Section 4 (Operation) of these instructions for information concerning initial start-up.

If the resulting rotation is incorrect, it can be reversed by interchanging any two (2) incoming cables. Check first that the motor mounted fan is suitable for rotation in the opposite direction, otherwise motor cooling and performance will be affected.

3.7.5 Auxiliary devices

Auxiliary devices such as resistance temperature detectors, thermocouples, thermoguards, etc., will generally terminate on terminal blocks located in the auxiliary terminal boxes on the motor.

Other devices may terminate in their own enclosures elsewhere on the motor. Such information can be obtained by referring to the outline drawing.

Information regarding terminal designation and the connection of auxiliary devices can be obtained from auxiliary drawings or attached nameplates.

If the motor is provided with internal space heaters, the incoming voltage supplied to them must be exactly as shown by either a nameplate on the motor or on the outline drawing for proper heater operation.

Caution must be exercised anytime contact is made with the incoming space heater circuit as space heater voltage is often automatically applied when the motor is shutdown.

4 OPERATION

4.1 Examination before starting

4.1.1 General

When the motor is installed correctly, ensure all wiring is in accordance with the connection diagram. The following points should also be noted:

(a) Make sure all wiring is correct.

(b) Ensure the sizes of cables are appropriate and that all connections are suitable for the currents they will carry.

(c) Ensure all connections are properly insulated for the voltage and temperature they will experience.

(d) Ensure the capacity of fuses, switches, magnetic switches and thermo relays etc. are appropriate and that the contactors are in good condition.

(e) Make sure the frame and terminal box are grounded.

(f) Make sure that the starting method is correct.

(g) Make sure all switches and starters are set at their right positions.

(h) Motor heaters must be switched off when the motor is running.

4.1.2 Measurement of insulation resistance

During and immediately after measurement, the terminals must not be touched as they may carry residual dangerous voltages.

If power cables are connected, make sure that the power supplies are clearly disconnected and there are no moving parts.

(a) Apply a meggar for one minute to the terminals to measure insulation resistance.

(1) For rated voltage below 1000V, measure with a 500VDC megger

(2) For rated voltage above 1000V, measure with a 1000VDC megger.

(3) Minimum insulation resistance, In accordance with IEEE 43, clause 9.3, should be:

$$R \geq \left(\frac{\text{Rated voltage (v)}}{1000} + 1 \right) \times 10 (\text{M}\Omega)$$

(b) On a new winding, where the contaminant causing low insulation resistance is generally moisture, drying the winding through the proper application of heat will normally increase the insulation resistance to an acceptable level. The following are accepted methods for applying heat to the winding:

(1) If the motor is equipped with space heaters, they can be energized to heat the winding.

(2) Direct current (as from a welder) can be passed through the winding. The total current should not exceed approximately 50% of rated full load current.
If the motor has only three leads, two must be connected together to form one circuit through the winding. In this case, one phase will carry the fully applied current and each of the others, one half each.
If the motor has six leads (3 mains and 3 neutrals), the three phases should be connected into one series circuit.

Ensure there is adequate guarding so live parts cannot be touched.

(3) Heated air can either be blown directly into the motor or into a temporary enclosure surrounding the motor. The source of heated air should preferably be electrical as opposed to fuel (such as kerosene), where a malfunction of the fuel burner could result in carbon entering the motor.

ATTENTION!

Caution must be exercised, when heating the motor with any source of heat other than self contained space heaters, that the winding temperature is raised at a gradual rate to allow any entrapped moisture to vaporise and escape without rupturing the insulation. The entire heating cycle should extend over 15-20 hours

(c) Insulation resistance measurements can be made while the winding is being heated. However, they must be corrected to 40ºC for evaluation since the actual insulation resistance will decrease with increasing temperature. As an approximation for a new winding, the insulation resistance will approximately halve for each 10ºC increase in insulation temperature above the dew point temperature.

(d) Should the resistance fail to attain the specified value even after drying, careful examination should be undertaken to eliminate all other possible causes, if any.

4.1.3 Power Source

(a) Ensure the capacity of the power source is sufficient.

(b) Ensure the supply voltage and frequency ratings are identical to those on the nameplate.

(c) Voltage variation should be confined to within ±10% of the rated value and the phase to phase voltages should be balanced.

4.1.4 Bearing lubrication

(a) Sleeve bearings:
The oil reservoir must be filled with oil to the correct level.

(1) On self-lubricated bearings, the standstill oil level will be at the centre of the oil gauge. The proper oil is a rust and oxidation inhibited, turbine grade oil. Refer to the lubrication nameplate for the recommended viscosity.

(2) Motors which have provision for flood lubrication, have an inlet orifice to control the oil flow to the bearing. Refer to the outline drawing for these values. If the supply pressure does not match that stated on the outline, the orifice size must be adjusted to produce the specified flow rate. The drain adapter (also provided) has a weir plate fixed to the inside of the pipe to permit the establishment of the proper oil level. This weir plate must be located at the bottom of the pipe and must be parallel to the plane of the motor feet. To ensure optimum flow, the drain line should be vented to the atmosphere.

Oil inlet temperature:	Normal below 50ºC
	Alarm 60ºC
	Trip 65ºC

(3) If the motor is in storage for over three (3) months, refilling of some new oil should be undertaken before operation to prevent bearing damage due to dry friction. The oil level should be kept at the center of the oil gauge. If necessary, drain some oil after refilling.

(b) Oil Mist Bearings:
Motors that have been designed with anti-friction bearings for use with an oil mist lubrication system have been packed at the factory with a small amount of grease for short test runs. Continuous running should not be considered unless the oil mist system is installed and operating.

(c) Grease lubricated bearings:

(1) The bearings have been well greased at the factory before delivery. However, regreasing is required if a significant period has elapsed between manufacture and use or in storage

(2) Unless otherwise specified, SHELL Alvania R3 is the standard applied to TECO motors.

4.1.5 Cooling water for water-cooled motors

Make sure the quality, volume and inlet temperature of cooling water for the motors are normal before the machine is in operation.

Water:	General tower water or industrial water.
Volume:	Please see outline drawing
Inlet temperature:	Normal below 30ºC
	Alarm 35ºC
	Trip 40ºC

4.1.6 Transport lock

ATTENTION!

Make sure all locks, which fasten the movable parts of the motors during transportation, are dismantled and the shaft can rotate freely.

4.1.7 Objects in the motor

ATTENTION!

Ensure there is no foreign matter or tools inside the motors before starting motors.

4.1.8 Tranmission system

Make sure the transmission system, including belts, screws, bolts, nuts and set pins are in good condition.

4.1.9 Shaft key

The keys fitted to the shaft extensions are held by plastic tape only to prevent them from falling out during transportation or handling. The shaft key shall be removed to avoid flying out, when the motor is operated prior to the couplings etc. being fitted to the shaft extension.

4.2 Starting operation

4.2.1 Initial starting

When the items in 4.1 have been examined:

(a) Test the motor running with or without load.

(b) Record and check according to “Maintenance” at 15-minute intervals during the first three hours of operation.

(c) Regular examinations should take place at longer intervals. If all results are satisfactory the motor can be classified as “in good order”.

4.2.2 Starting load

Initially run the motor unloaded prior to coupling to the driven machines. Unless otherwise specified, a motor usually starts with light load, which is then gradually increased, proportional to the square of the speed and at last reaches 100% load at full load speed.

4.2.3 Starting frequency

Too many frequent starts can be harmful to the motors. The following restrictions should be observed:

(a) Motor can be restarted should the initial start fail. Two starts are generally permissible when the motor is cold.

(b) Motor can be started only once when it is at normal running temperature.

(c) Should additional starts be necessary beyond the conditions stated above, the following restrictions should be noted:
   (1) Let the motor cool down for 60 minutes before restarting, fully loaded.
   (2) Let the motor cool down for 30 minutes before restarting, unloaded.
   (3) Two inching starts can be regarded as one normal start.

ATTENTION!

If the motor rotor fails to start turning within one or two seconds, shut off the power supply immediately.
Investigate thoroughly and take corrective action before attempting a restart.

Possible reasons for not starting are:
(1) The voltage is too low at the motor terminals.
(2) The load is too much for the rotor to accelerate.
(3) The load is frozen up mechanically.
(4) All electrical connections have not been made.
(5) Single-phase power has been applied.
(6) Any combination of the above.

4.2.4 Direction of rotation

(a) Most TECO motors are bi-directional. However, some special types, such as 2-Pole, certain large power motors, those with a non-reversing ratchet etc., should rotate in one direction only. Please ensure the rotation is in conformance with the directional arrow attached to the motor.

(b) To reverse a bi-directional motor, cut the power and wait until the motor stops, then interchange any two of the three phases.

4.2.5 Power source (Voltage/Current/Frequency)

(a) Ensure the voltage and frequency of the power source are identical to the ratings shown on the nameplate.

(b) Voltage variation should be confined to within ±10% of the rating and the three phase voltages should be in full balance

(c) Ensure the motor phase currents, when without load, are within ±5% of the average values.

Frequency variation should be confined to within ±5% of the rating.

The aggregate variation of voltage and frequency should be confined to within ±10% of the absolute value of the ratings.

4.2.6 Starting time and unusual noises

ATTENTION!

Starting time is longer for motors with large inertia. However, if starting time is longer than usual, or if there is difficulty in starting, or there is abnormal noise, do not run the motor and refer to TECO Service representative.

4.2.7 Sleeve bearing oil rings (sleeve bearing types only)

As the oil ring is used to carry lubricant to sleeve bearings, frequently check to ensure the oil ring is in motion.

4.2.8 Bearing temperature rise

Following the initial start-up, the bearing temperatures should be closely monitored. The rate of rise in bearing temperature is more indicative of impending trouble than is the actual temperature.

ATTENTION!

If the rate of rise in temperature is excessive or if the motor exhibits excessive vibration or noise, it should be shut down immediately and a thorough investigation made as to the cause before it is operated again

If the bearing temperature rise and motor operation appear to be normal, operation should continue until the bearing temperature stabilises.

Recommended limits on bearing temperature are as follows:

Sleeve Bearings	**Total measured temperature**
• By permanently installed detector	90ºC
• By temporary detector on top of the bearing sleeve near the oil ring	85ºC

Anti-Friction Bearings	**Total measured temperature**
• By permanently installed detector	100ºC
• By temporary detector measuring the outside of the bearing housing	95ºC

ATTENTION! (For sleeve bearing)

(1) It must be noted that when operating flood lubricated sleeve bearings without outside lubrication being supplied, the bearing temperature must not be allowed to exceed 85°C total temperature

(2) Under normal condition, for self-lubricated bearings, the rate of temperature rise should be from 11 to 14°C for the first ten (10) minutes after starting up and approximately 22°C at thirty (30) minutes after start-up. The rate of bearing temperature rise is a function of the natural ventilation and operating conditions.

(3) When the rate of bearing temperature rise is less than 1°C per half-hour, the bearing temperature is considered to be stabilized.

(4) If the total bearing temperature exceeds 95°C, the motor should be shut down immediately.

4.2.9 Noise and Vibration

ATTENTION!

Any abnormal noise or vibration should be immediately investigated and corrected. Increased vibration can be indicative of a change in balance due to mechanical failure of a rotor part, a stator winding problem, or a change in motor alignment.

5 MAINTENANCE

5.1 Regular inspections and maintenance

For safety, maintenance and repairs must only be carried out by properly trained personnel.

Some testing, such as insulation resistance, usually requires the motor to be stopped and isolated from power supply(s).

Routine inspection and maintenance are usually performed by looking, listening, smelling and simple meters.

High temperature may arise under operating conditions on the motor surfaces, so touching should be prevented or avoided. Keep away from moving and live parts. Unless deemed necessary, do not remove guards whilst assessing the motor.

Timely replacement of worn parts can ensure longevity and prevent breakdown.

Routine inspection and regular inspection and maintenance are important in preventing breakdown and lengthening service life.

Owing to the varied time and circumstances in which motors are used, it is difficult to set items and periods for regular inspection and maintenance. However, as a guide it is recommended to be performed periodically according to the factory maintenance program. Generally, the inspection scope shall be determined by the following factors:

(a) Ambient temperature.
(b) Starting and stopping frequency.
(c) Troublesome parts usually affecting motor functions.
(d) Easily worn parts.
(e) The important position of motor in the operational system of a factory should be duly recognized. Therefore, its health and wellbeing should be fully protected especially when it is operating in severe conditions.

5.2 Motor windings

(a) Measurement of insulation resistance and standards to determine quality of insulation resistance. Refer to measures stated in 4.1.2 “Measurement of insulation resistance”.
(b) Inspection of coil-ends:
    (1) Grease and dust accumulated on coils may cause insulation deterioration and poor cooling effect.
    (2) Moisture must not accumulate. Keep coils warm when motor is not in use if moisture can be seen.
    (3) Discoloring. This is mainly caused by overheating.
(c) Ensure no untoward change of wedges from original position.
(d) Ensure the binding at the coil end is in its normal position.

5.3 Clean the interior of the motor

(a) After a motor has been in operation for some time, accumulation of dust, carbon powder and grease etc., on the inside is unavoidable, and may cause damage. Regular cleaning and examination is necessary to assure top performance.
(b) Points to note during cleaning:

(1) If using compressed air or blower:
   (i) Compressed air should be free of moisture.
   (ii) Maintain air pressure at 4 kg/cm², since high pressure can cause damage to coils.
(2) Vacuum cleaning can be used, both before and after other methods of cleaning, to remove loose dirt and debris. It is a very effective way to remove loose surface contamination from the winding without scattering. Vacuum cleaning tools should be non-metallic to avoid any damage to the winding insulation
(3) Surface contamination on the winding can be removed by wiping using a soft, lint-free wiping material. If the contamination is oily, the wiping material can be moistened (not dripping wet) with a safety-type petroleum solvent. In hazardous locations, a solvent such as inhibited methyl chloroform may be used, but must be used sparingly and immediately removed. While this solvent is non-flammable under ordinary conditions, it is toxic and proper health and safety precautions should be followed while using it

ATTENTION!

Solvents of any type should never be used on windings provided with abrasion protection. Abrasion protection is a grey, rubber-like coating applied to the winding end-turns.

Adequate ventilation must always be provided in any area where solvents are being used to avoid the danger of fire, explosion or health hazards. In confined areas (such as pits) each operator should be provided with an airline respirator, a hose mask, or a self-contained breathing apparatus. Operators should wear goggles, aprons and suitable gloves. Solvents and their vapors should never be exposed to open flames or sparks and should always be stored in approved safety containers.

(4) Keep core ducts completely clean. The difference in temperature rise could be around 10°C before and after cleaning

5.4 Clean the exterior of the motor

(a) On open ventilated motors, screens and louvres over the inlet air openings should not be allowed to accumulate any build-up of dirt, lint, etc. that could restrict free air movement.

ATTENTION!

Screens and louvres should never be cleaned or disturbed while the motor is in operation because any dislodged dirt or debris can be drawn directly into the motor.

(b) If the motor is equipped with air filters, they should be replaced (disposable type) or cleaned and reconditioned (permanent type) at a frequency that is dictated by conditions.It is better to replace or recondition filters too often than not often enough.
(c) Totally enclosed air-to-air cooled and totally enclosed fan cooled motors require special cleaning considerations. The external fan must be cleaned thoroughly since any dirt build-up not removed can lead to unbalance and vibration. All of the tubes of the air-to-air heat exchanger should be cleaned using a suitable tube brush having synthetic fibre bristles (not wire of any type).

5.5 Maintenance of anti-friction bearings

5.5.1 Frequency of re-lubrication

The life of grease varies greatly as a result of types of model, revolution speed, temperature, operational conditions etc. It is, therefore, impossible to be precise about replenishment intervals. However, for normal direct coupling transmission, the periods shown Table 1 in may be used as a guide.

Notes:

(a) The periods shown in Table 1 should be halved where bearings are used for belt drive and/ or in dirty or high ambient temperature or high humidity environments.

(b) Please refer to the lubrication nameplate, if attached to the motor.

(c) For bearing numbers outside the range of Table 1, please contact TECO.

(d) If the periods referred to in Table 1 for drive-end bearing and opposite drive-end are different, for the convenience of maintenance operation, please take the shorter one the required grease replenishment period of these bearings.

TABLE 1

Bearing Number		600 RPM	720 RPM	750 RPM	900 RPM	1000 RPM	1200 RPM	1500 RPM	1800 RPM	3000 RPM	3600 RPM
	6210										
	12									2000 Hrs	
	13										
	14									1000 Hrs	
	15										
	16									720 Hrs	
	17							2000 Hrs			
62XX	18			3000 Hrs							
63XX	20										
72XX	22										
73XX	24							1500 Hrs			
	26										
	28					2000 Hrs		1000 Hrs			
	30										
	32							500 Hrs			
	34					1500 Hrs					
	36										
	38			2000 Hrs		1000 Hrs					
	NU214										
	15							2000 Hrs			
	16										
	17										
	18			3000 Hrs				1500 Hrs			
	20										
	22							1000 Hrs			
	24										
NU2XX	26					2000 Hrs					
NU3XX	28							500 Hrs			
	30										
	32										
	34			2000 Hrs		1000 Hrs					
	36										
	38	2000 Hrs									
	40										
	44			1000 Hrs							
	48	1000 Hrs									

Bearing Number		600 RPM	720 RPM	750 RPM	900 RPM	1000 RPM	1200 RPM	1500 RPM	1800 RPM	3000 RPM	3600 RPM
222XX 223XX	22220							300 Hrs			
	22										
	24	1000 Hrs				500 Hrs					
	26										
	28										
	30					300 Hrs					
	32			500 Hrs							
	34										
	36										
	38	500 Hrs									
	40			300 Hrs							
	44										
	48	300 Hrs									

5.5.2 Kinds of grease

SHELL Alvania R3 grease is standard for TECO motors except some special models for which special grease will be shown on the lubrication nameplate. Please use identical grease or equivalents when for maintenance.

ATTENTION!

Do not mix different kinds of grease.
Mixing grease of different types may destroy its composition and physical properties. Even if the thickeners are of the same type, possible differences in the additive may cause detrimental effects.

5.5.3 Grease quantity

The amount of grease per replenishment depends on the type, size and construction of the bearings. The maximum amount of one replenishment for each bearing is shown in Table 2.

TABLE 2

Bearing No.		Amount of replenishment
62XX 72XX NU2XX 2222XX	6210	30 g
	6212	40 g
	6213	50 g
	6214	50 g
	6215	60 g
	6216	60 g
	6217	80 g
	6218	80 g
	6220	100 g
	6222	120 g
	6224	120 g
	6226	140 g
	6228	160 g
	6230	180 g
	6232	200 g
	6234	250 g
	6236	300 g
	6238	350 g
	6240	400 g
	6244	450 g

Bearing No.		Amount of replenishment
63XX 73XX NU223XX 223XX	6310	40 g
	6312	60 g
	6313	80 g
	6314	80 g
	6315	100 g
	6316	100 g
	6317	120 g
	6318	120 g
	6320	160 g
	6322	220 g
	6324	270 g
	6326	300 g
	6328	400 g
	6330	450 g
	6332	500 g
	6334	600 g
	6336	700 g
	6338	800 g
	6340	900 g
	6344	900 g

*Fill new grease until it overflows and the old grease is entirely replaced.

5.5.4 Re-greasing

If re-lubrication is to be performed when the motor is running, stay clear of rotating parts.

It is advisable to re-grease when the motor is running to allow the new grease to be evenly distributed inside the bearing.

Before re-greasing, the inlet fitting should be thoroughly cleaned to prevent any accumulated dirt from being carried into the bearing with the new grease. The outlet of grease drainage should be opened to allow the proper venting of old grease.

Use a grease gun to pump grease through grease nipple into the bearings.

After re-greasing, operate the motor for 10-30 minutes to allow any excess grease to vent out.

5.5.5 Oil re-lubrication (For oil lubrication types only)

Maintain proper lubrication by checking the oil level periodically and adding oil when necessary.

Because of the initial clearing action of the bearing and the expansion of the oil as it comes up to operating temperature, the oil level will be higher after the motor has been in operation for a while than it is with the motor at standstill.

Overfilling should be avoided not only because of the possibility that expansion may force the oil over the oil sleeve and on to the rotor, but also because too high an operating oil level prevents the bearing from clearing itself of excess oil. The resultant churning can cause extra loss, high temperatures, and oxidised oil. If, during operation, the oil level goes above the maximum shown on the sight gauge, drain enough oil to bring the level back within the recommended operating range. **Do not permit the operating level to fall below the minimum shown on the gauge.**

ATTENTION!

Should it become necessary to add excessive amounts of oil, investigate immediately for oil leaks.

Change the oil at regular intervals. The time between oil changes depends upon the severity of operating conditions and must therefore be determined by the motor user. Two or three changes a year is typical, but special conditions, such as high ambient temperature, may require more frequent changes. Avoid operating the motor with oxidised oil.

Use only good grade, oxidation-corrosion-inhibited turbine oils produced by reputable oil companies.

The viscosity of the oil to be used depends upon the type and size of the bearings, load and speed, ambient temperature, and the amount and temperature of the cooling water (if used).

The lubrication nameplate or instructions with each motor specifies the viscosity range of oil suitable for average conditions. The usual oil viscosity range of oil is suitable for average conditions.

The usual oil viscosity recommendations are summarised in Table 3.

Operation in ambient temperatures that are near or below freezing may require preheating of the oil or the use of special oil.

Whenever the motor is disassembled for general cleaning and reconditioning, the bearing housing may be washed out with a suitable cleaning solvent. Be sure that the oil-metering hole is clear, and dry the housing thoroughly before re-assembly, ensuring all traces of cleaning solvent have been removed.

TABLE 3 OIL VISCOSITY**

Bearing function and location	Bearing Type	Oil Viscosity - SSU	
		@ 100°F	@ 200°F
Thrust Bearing	72XX, 73XX Angular contact ball And/or (62XX, 63XX)	150	45
	Spherical roller	300	53
	Plate (Kingsbury Type)	300	53

**Note: When a lubrication nameplate is attached to the motor, use the lubrication oil it stipulates

ATTENTION!

Should it become necessary to add excessive amounts of oil, investigate immediately for oil leaks.

5.5.6 Cleaning and installation of bearings

(a) Apply the proper amount of grease to the disassembled parts of the bearing after they have been thoroughly cleaned with high quality cleaning oil, then protect them from contamination before and during assembly.

(b) Bearing installation.

ATTENTION!

Before installing the bearings, make sure that the shaft mounted parts inside the bearings are in place.

Since the bearing is a high precision component, it is important to avoid ingression of dust and foreign matter, and hammering during cleaning and installation. Use extreme care and ensure clean conditions during installation and assembly.

ATTENTION!

The best way for bearing installation is heat shrinking. Knocking and hammering during installation should be avoided.

The bearing should be heated in a bath of clean oil at a temperature of approximately 80°C. After warming, slide the bearings into place quickly so that it does not shrink before being fully in position.
Grease the bearing after the temperature returns to normal, and then reassemble the motor.

5.6 Maintenance of sleeve bearings

5.6.1 Daily inspections

(a) Ensure the volume and quality of lubrication oil are in compliance with the specifications.

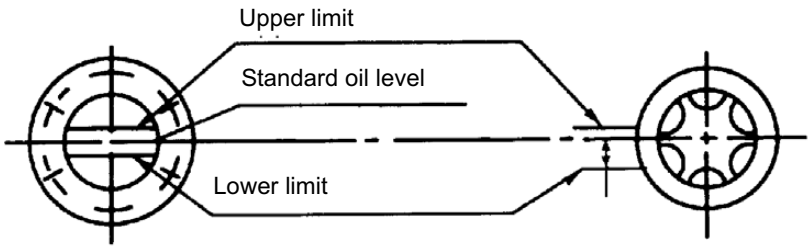

Fig. 12

(b) Ensure there is motion of the oil ring and it is not clamped.

(c) The indicator of the shaft endplay should be restricted within the specified range of the red groove of the shaft or the ±3mm (0.118 in.) range of the drive-end shaft shoulder, or the bearing may be damaged.

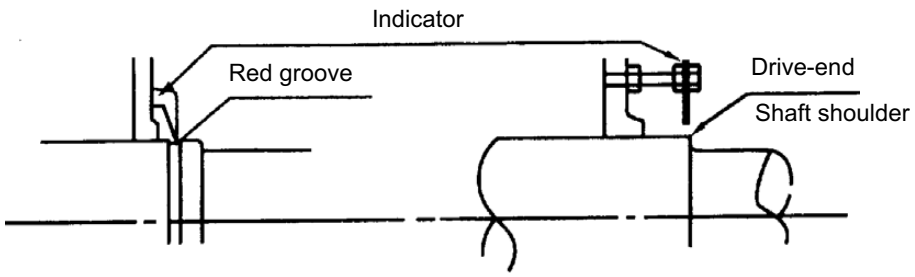

Fig. 13

5.6.2 Regular examination

(a) Periodical change of oil
The oil reservoirs of self (not flood) lubricated bearings should be drained and refilled about every six (6) months. More frequent changes may be needed on high speed (3600 rpm) motors or if severe oil discoloration or contamination occurs. In conditions where contamination does occur, it may be advisable to flush the reservoir with kerosene to remove any sediment before new oil is added. Proper care must be taken to thoroughly drain the reservoir of the flushing material before refilling with the new oil.

Refill the reservoir to the center of the oil sight glass with a rust and oxidation inhibited turbine grade oil. Refer to the outline drawing and lubrication nameplate for the correct viscosity.

(b) Quantity of lubrication oil
Refer to the lubrication nameplate for oil quantity.

(c) Oil viscosity

ISO	Equivalents	Viscosity (SUS/100°F)
VG32	Esso Teresso 32	150
VG46	Esso Teresso 46	200
VG68	Esso Teresso 68	300

5.6.3 Disassembly

Prior to disassembling, ensure the power supplies are disconnected and there are no moving parts.

The bearing sleeve is of the spherically seated, self-aligning type. The non-drive end bearing is normally insulated for larger motors (or when specified). On some motors, the insulation is bonded to the spherical seat of the bearing housing.

ATTENTION!

Extreme care must be exercised in removing the bearing sleeve from the insulated support to avoid damaging this insulation.

The following is the recommended procedure for removing the bearing sleeve:

(a) Remove the oil drain plug in the housing bottom and drain the oil sump.

(b) Remove all instrumentation sensors that are in contact with the bearing sleeve. These include resistance temperature detectors, thermocouples, thermometers, etc..

(c) Remove the socket head bolts holding the bearing cap and the inner air seal. The end cover plate must also be removed if the non-drive end bearing is being disassembled. Remove the bearing cap and top half of the inner air seal. Place them on a clean, dry surface to avoid damage to the parting surfaces.

(d) Remove the top half of the bearing sleeve using suitable eyebolts in the tapped holes provided. Lift the bearing top straight up and avoid any contact with the shoulders of the shaft journals that might damage the thrust faces of the bearing. Place on a clean, dry surface taking care to prevent damage to either the parting surfaces or the locating pins that are captive in the top bearing half.

(e) Remove the screws at the partings in the oil ring and dismantle the ring by gently tapping the dowel pin ends with a soft face mallet. Remove the ring halves and immediately reassemble them to avoid any mix up of the parts or damage to the surfaces at the partings.

(f) Pull up on the garter spring surrounding the floating labyrinth seal and carefully slip out the top half. Rotate the garter spring until the lock is visible. Twist counter-clockwise to disengage the lock, remove the garter spring then rotate the lower half of the seal out of the groove in the bearing housing. Note the condition of these floating labyrinth seals - if they are cracked or chipped, they must be replaced. Do not attempt to reuse a damaged seal.

(g) To remove the bottom bearing half, the shaft must be raised a slight amount to relieve pressure on the bearing. On the drive end, this can be done by jacking or lifting on the shaft extension. Protect the shaft. On the non-drive end, jacking or lifting can be done using bolts threaded into the tapped holes provided in the shaft end.

(h) Roll the bottom bearing half to the top of the shaft journal and then lift it using suitable eyebolts threaded into the holes provided. Again avoid any contact with the shaft shoulders that could damage the bearing thrust faces. Place the lower bearing half on a clean, dry surface to protect the parting surfaces.

Use extreme care when rolling out the lower bearing half. Keep hands and fingers well clear of any position where they might be caught by the bearing half if it were accidentally released and rotated back to its bottom position. Serious personal injury could result.

(i) Protect the shaft journal by wrapping it with clean, heavy paper or cardboard.

5.6.4 Re-assembly

Bearing re-assembly is basically a reverse of the disassembly procedures outlined above, with the following suggestions:

(a) The interior of the bearing housing should be cleaned and then flushed with clean oil or kerosene.

(b) The bearing halves and the shaft journal should be wiped clean using lint-free cloth soaked with clean oil.

(c) All parts should be carefully inspected for nicks, scratches, etc., in any of the contact surfaces. Such imperfections should be removed by an appropriate method such as stoning, scraping, filling, etc., followed by thorough cleaning.

(d) Before installing the floating labyrinth seal halves, observe their condition. Do not attempt to use a cracked or chipped seal. The bottom half seal has a set of drilled holes in its side face. These must be placed at the bottom towards the inside of the bearing so that accumulating oil may drain back into the housing.

(e) Put a bead of Curil-T around the seal half outside diameter’s on both sides adjacent to the garter spring groove. This will prevent oil by-passing the seal around its outside.

(f) Place the bottom seal half on top of the shaft and roll it into position. Install the top half and insert the garter spring pulling up on both ends to permit engaging the lock. Run a bead of

Curil-T around the outside diameter's on both sides adjacent to the garter spring groove on this half also.

(g) Carefully reassemble the two oil ring halves. Inspect the dowel pins for burrs and straightness and make any corrections required. Do not force the ring halves together. Excessive force may alter the roundness or flatness of the oil ring which can change its oil delivery performance.

(h) Some of the pipe plugs in the housing are metric thread type. These are identified as those which have a copper, lead, or similar material washer. If these plugs are removed, be careful not to lose the washers. Before re-assembly, inspect the washers and replace them as required.

(i) Before installing the bearing cap, observe the position of the floating labyrinth seal. The "tab" must be on top to engage the pocket. Failure to position the seal properly will result in damage when the cap is assembled.

ATTENTION!

(1) Curil-T is the only approved compound for use in the assembly of the bearings on this motor. Other products may harden and impede the operation.

(2) During re-assembly of the bearing parts, a thin layer of Curil-T should be applied to all gaskets and machined interface surfaces. This suggestion does not apply to the machined surfaces of the bearing liner halves.

(3) When seating the bearing shell, apply a thin layer of lube oil at the spherical surface of the liner. Slowly roll the lower bearing liner into the bearing housing making sure that the splinted surface of the liner and the housing are flush. Gradually lower the shaft onto the bearing. The weight of the shaft will help rotate the bearing liner so that the babbitt surface of the liner will match the slope of the journal. Sometimes it is required to use a rubber mallet to tap lightly on the bearing housing while slowly rolling the shaft to help this seating operation.

5.7 Maintenance of slip-ring (For Wound Rotor Motors only)

Ensure motor is disconnected from power supplies and there are no accessible moving parts before maintenance operation.

5.7.1 Adjustment of carbon brush

(a) Brush pressure for normal operation:

- Electro-graphite brush…..0.2~0.25 kg/cm²
  When frequent vibrations are evident or the brush is small (area below 0.5 cm²), the pressure should be greater than as shown.

(b) Adjustment of brush pressure:
The brush pressure should be adjusted to keep normal operation as it wears.

- The brush pressure may be reduced after use, so it is necessary to re-adjust. For adjustment, please turn adjusting screw, pressure adjusting pin or pressure adjusting plate as shown in Fig. 14 to obtain the correct tension (=0.23 x brush cross sectional area in cm²) ±10% kg.

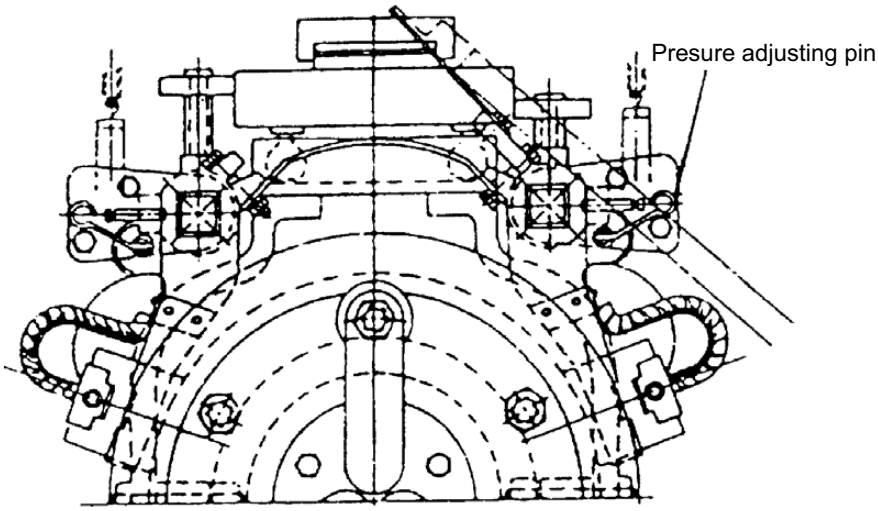

Fig. 14

(c) Brush pressure need not be adjusted if constant force spring is used as shown in Fig. 15 and Fig. 16.

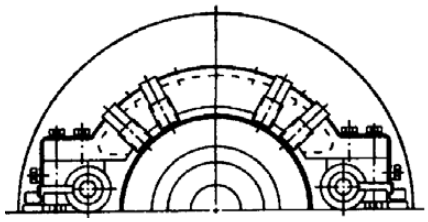

Fig. 15

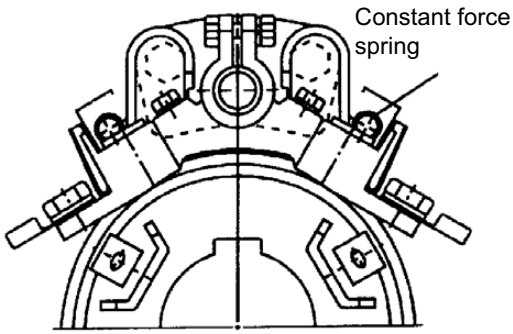

Fig. 16

5.7.2 Brush replacement

The carbon brush is a part of the equipment which is easily worn away, replace it after it is worn to ½ ~ ¾ of original size.

(a) Brush material is important to the performance of the motor. Only the most appropriate materials are chosen by TECO, and are listed on the nameplate of the motor. It is important to know this when you replace the brush, so a recommended type is used.

(b) Dimensions:
Brush, holder and gap between them, please refer to CNS 2322 C4051 or JIS C2802.

ATTENTION!

The gap between a brush and its holder is important for good performance and safety of the motor.

(c) Adjustment of new brushes (Shown in Fig. 17)

(1) Polish the new brush with a file until is assumes the appropriate contour of the slip-ring which it touches.

(2) Place sand-paper (JIS R6252 No. 40…50) on the slip-ring with the abrasive face of the paper against the brush to induce a closer contact by rubbing against each other.

(3) Repeat item 2 with fine sand–paper (JIS R6252 No. 100 to 200) until the contact surface between brush and slip-ring exceeds 80%.

(4) Finally, clean the contaminated slip-ring and brush with a clean cloth or compressed air.

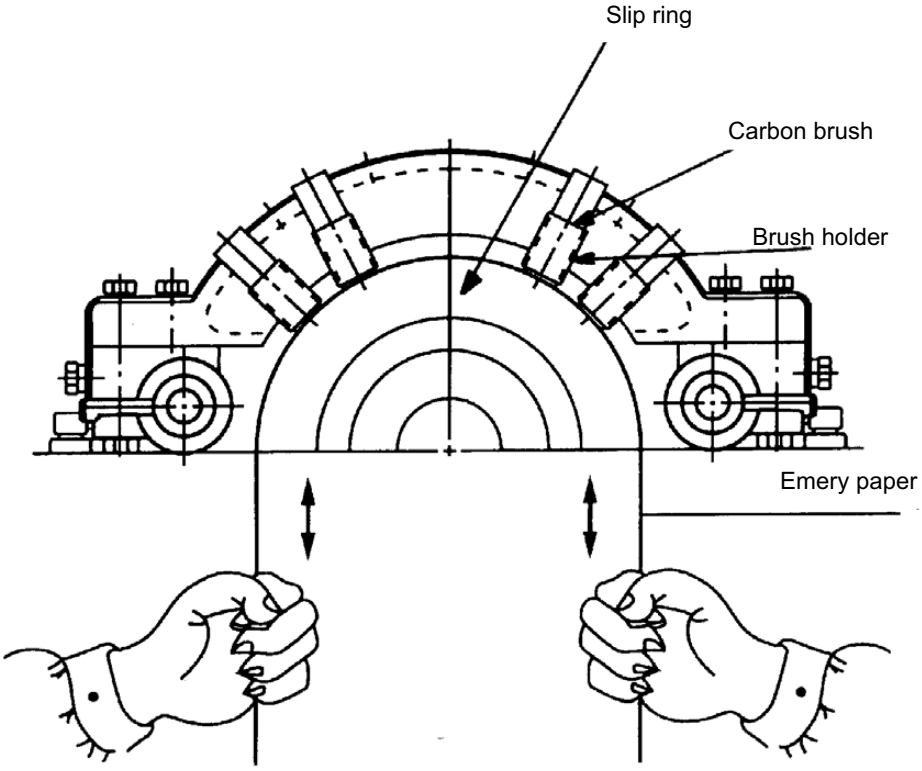

Fig. 17

5.8 Maintenance of non-reverse ratchet mechanism

(Vertical high-thrust Motor only)

(a) In the pump piping system, a check valve and a stop valve should be installed in the discharge line. The check valve, placed between the pump and the stop valve, is to protect the pump from reverse flow and excessive backpressure. The stop valve is used in priming, starting and when shutting down the pump. It is advisable to close the stop valve before stopping the pump. This is especially important when the pump is operated against a high static head.

(b) TECO vertical high-thrust motors are equipped with non-reverse ratchet (N.R.R.) mechanism only when requested by the pump manufacturer. Typical construction of the N.R.R. mechanism is shown as below.

(1) The N.R.R. mechanism keeps the pump and motor from rotating in the reverse direction. Thus prevents damage from over-speeding and damage to water-lubricated pump shaft bearings when, on shutdown, the falling water column tends to drive the pump in the reverse direction.

(2) In normal operation, the ratchet pins are lifted by the ratchet teeth and are held clear by centrifugal force and friction as the motor comes up to speed. When power is removed, the speed decreases and the pins fall. At the instant of reversal, a pin will catch in a ratchet tooth and prevent backward rotation.

(c) The service life of ratchet pins depends not only on the reverse shock load between the pin and ratchet tooth when pump stopped but also the frequency of pump starting and stopping while in service. If the pins are deformed due to this reverse shock load, then the up and down motion of the ratchet pins could be sluggish or jammed and unusual noises could arise.

(d) The recommended replacement period for these ratchet pins is every three (3) years. If the reverse shock load is greater than 30% of motor rated torque or the starting frequency is more than twice per day, then the replacement period should be halved.

ATTENTION!

The check valve and stop valve in the discharge line should be regularly inspected and maintained to assure the normal function of these valves. This is important to protect the pump and motor from damage and increase the service life of the N.R.R. mechanism.

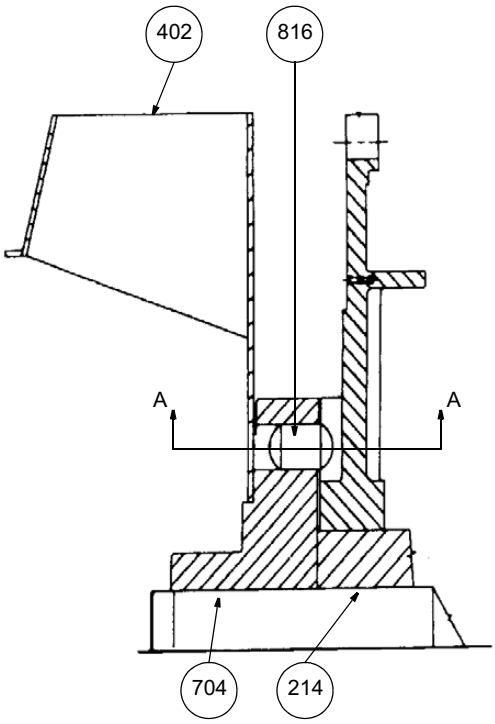

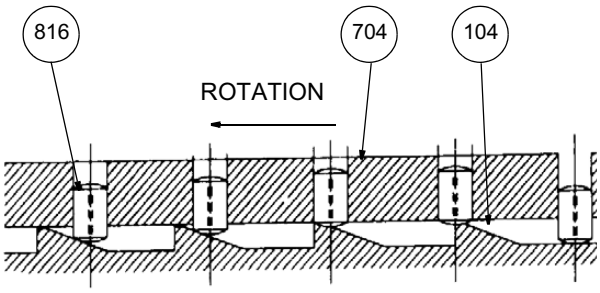

SECTION A-A

ITEM	NAME
104	RATCHET
214	BEARING SEAT
402	EXTERNAL FAN
704	RATCHET PIN CARRIER
816	RATCHET PIN

Fig. 18

6 FAULT FINDING AND RECOGNITION

Kinds of Breakdown	Symptoms	Possible Causes	Remedies
Fail to start without load	Motionless and soundless	Power-off	Consult power company
		Switched-off	Switch-on
		No fuse	Install fuse
		Broken wiring	Check wiring and repair
		Broken lead	Check wiring and repair
		Broken windings	Check windings and repair
	Fuse blowing. (Automatic switch trips off, slow start with electromagnetic noise)	Short circuit of circuit switches	Check circuit switches and replace
		Incorrect wiring	Check wiring is according to nameplate
		Poor contact at terminals	Fasten terminals tightly
		Windings grounded	Requires repair by factory
		Broken windings	Requires repair by factory
		Poor contact of circuit switches	Check and repair
		Broken wiring	Check and repair
		Poor contact of starting switches	Check and repair
		Short circuit of starting switches	Check and repair
		Incorrect connections of starting switches	Ensure connections are according to nameplate

Kinds of Breakdown	Symptoms	Possible Causes	Remedies
Loading after start	Fuse blowing. Fail to restart due to triping of automatic switch	Capacity of fuse too small	Replace fuse with correct size
		Overload motor	Reduce load
		High load at low voltage	Check circuit capacity and reduce load
	Motor overheating	Overload or intermittent overload	Reduce load
		Under-voltage	Check circuit capacity and power source
		Over-voltage	Check power source
		Ventilation duct clogged	Remove the foreign matter from the duct
		Ambient temperature exceeds 40°C	Correct insulation class to B or F, or lower ambient temperature
		Friction between rotor and stator	Requires repair by factory
		Fuse blown (Single-phase rotating)	Install the specified fuse
		Poor contact of circuit switches	Check and repair
		Poor contact of circuit starting switches	Check and repair
		Unbalance three-phase voltage	Check circuit or consult power company
	Speed falls sharply	Voltage drop	Check circuit and power source
		Sudden overload	Check motor
		Single-phase rotating	Check circuit and repair
	Switch overheat	Insufficient capacity of switch	Replace switch
		High load	Reduce load
	Bearing overheating	High belt tension	Adjust belt tension
		Slack belt tension	Adjust belt tension
		Misalignment between motor and machine shafts	Re-align
		Overspeed of bearing outer-ring	Adjust bracket
		High bearing noise	Replace damaged bearing

Kinds of Breakdown	Symptoms	Possible Causes	Remedies
Noise	Electromagnetic noise induced by electricity	Occurrence from its first operation	May be normal – Performance is not affected
		Sudden sharp noise and smoking	Short circuit of windings should be repaired at the factory
	Bearing noise	Noise sounding like low ‘shishi’ or ‘Thru-Thru’	May be normal – Performance is not affected
		Noise sounding like ‘Kala-Kala’ as a result of poor lubrication	Bearing needs re-greasing
		Noise sounding like ‘Kulo-Kulo’ as a result of poor lubrication	Clean bearing and re-grease
		Noise sounding like ‘Sa-Sa’ or louder noise	Replace damaged bearing
	Mechanical noise caused by machinery	Loose belt sheave	Adjust key and lock the screw
		Loose coupling or skip	Adjust the position of couplings, lock key and screw
		Loose screw on fan cover	Lock fan cover screw tightly
		Fan rubbing	Adjust fan position
		Rubbing as a result of ingress of foreign matter	Clean motor interior and ventilation ducts
		Wind noise	Noise induced by air flowing through ventilation ducts
		Induced by conveyance machine	Repair machine
Vibration	Electromagnetic vibration	Short circuit of winding	Requires repair by factory
		Open circuit of rotor	Requires repair by factory
	Mechanical vibration	Unbalanced rotor	Requires repair by factory
		Unbalanced fan	Requires repair by factory
		Broken fan blade	Replace fan
		Unsymmetric centers between belt sheaves	Align central points
		Central points of couplings do not lie on the same level	Adjust the central points of couplings to the same level
		Improper mounting installation	Lock the mounting screws
		Motor mounting bed is not strong enough	Reinforce mounting bed

Notes:

(1) Circuit switches: These include knife switches, electromagnetic switches, fuse and other connection switches etc.

(2) Starting switches: These include Delta-Star starters, compensate starters, reactance starters, resistor starters, starting controller’s etc.

Teco Electric Europe Limited
Teco Building
Marshall Stevens Way
Trafford Park
Manchester
M17 1PP

Tel: +44 (0)161 877 8025
Fax: +44 (0)161 877 8030

Project:

LAVRION V-CCPP
DMKT 11 21 302

Title: Motor General Arrangement Drawing

Circulating Water Pumps (5PAC10/20 AP001)

Supplier Document No:	-	Issue: 1
KKS Document No:	5-PAC-EDP-FPD-254	
Purpose of issue: For approval		Date: 8/09/04

00-Y-X-10302-F3/I Issue 1

Prepared: SW

Reviewed: HL

Approved: CW

TYPE	OUTPUT		POLE	TIME RATING	VOLTAGE V	HZ	SYN. SPEED RPM
	HP.	KW.					
AEVE—WT001		625	12	CONT.	6000	50	500

TOTALLY ENCLOSED AIR TO AIR COOLED VERTICAL TYPE, SQUIRREL CAGE ROTOR.

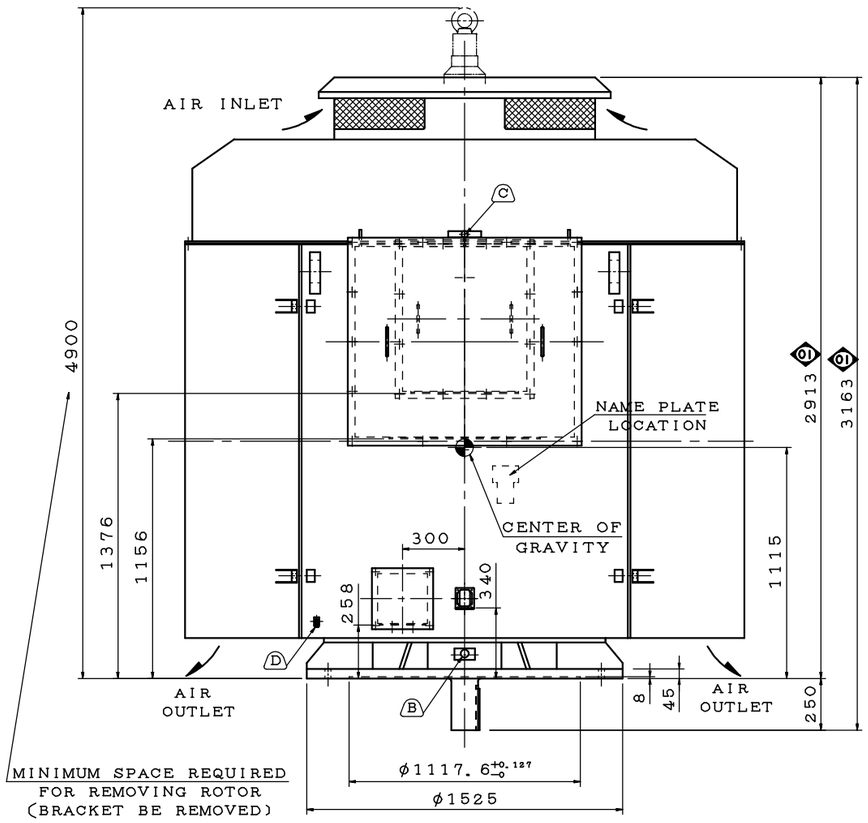

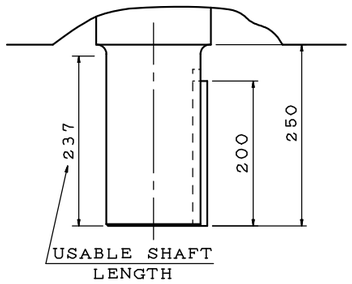

NOTE:
1. DIMENSIONS IN MM.
2. FRAME NO. 710A
3. F CLASS INSULATION
4. FOR DIRECT FLEXIBLE COUPLING.
5. BEARING SIZE:
   UPPER BEARING: 7330B (INSULATED)
   LOWER BEARING: 6230C3 (UNINSULATED)
6. UPPER BEARING IS INSULATED. ANY METAL CONNECTINOS TO IT MUST BE INSULATED.
7. LUBRICATION: UPPER BEARING AND LOWER BEARING USE GREASE.
8. ROTATION:COUNTER—CLOCKWISE (VIEWED FROM TOP).
9. WITH SPACE HEATER:3ϕ 400V, 800W.
10. WITH WINDING R. T. D. :PT 100Ω/0°C, 6PCS.
11. WITH BEARING R. T. D. :PT 100Ω/0°C, 2PCS. (DUAL ELEMENT)
12. ENCLOSURE:IPW55 AND OUTDOOR SERVICE.
13. NOISE:BELOW 80dBA AT 1 METER DISTANCE NO LOAD.
14. NATURAL REED FREQUENCY: 13HZ.
    ABOVE CALCULATION IS CONSIDERING MOTOR AND FOR REFERENCE ONLY.
    THE WHOLE PUMPING SYSTEM ANALYSIS SHALL BE PERFORMED BY THE PUMP MANUFACTURER.
15. MOTOR APPROX. WEIGHT: 12800kgs.
16. TWMC IS NOT RESPONSIBLE FOR FOUNDATION DESIGN. THE SUPPORT REACTION NECESSARY FOR FOUNDATION DESIGN ARE AS FOLLOWS —kgs PER BOLT AT CENTERLINE OF HOLD DOWN BOLT HOLES:

STATIC	:	MOTOR WEIGHT/12(AXIAL)
RATED MOTOR TORQUE	:	MOTOR WEIGHT/12 IN AXIAL DIRECTION, 154 kgf IN TANGENTIAL DIRECTION.
MAXIMUM MOTOR TORQUE	:	MOTOR WEIGHT/12 IN AXIAL DIRECTION, 1232 kgf IN TANGENTIAL DIRECTION.

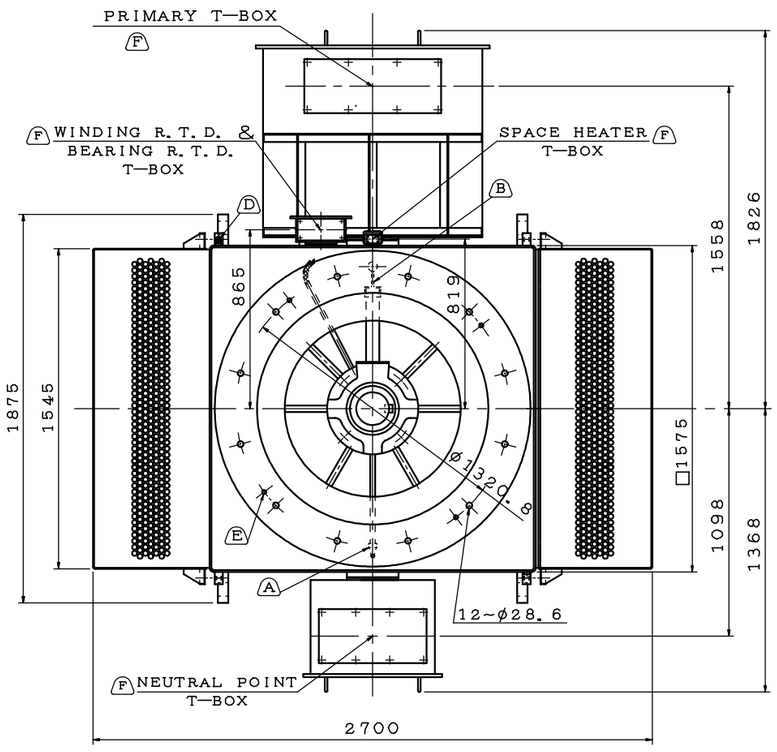

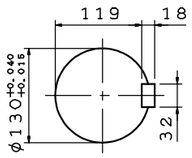

SHAFT END
(ENLARGED VIEW)

(A) GREASE INLET NIPPLE (LOWER BEARING)

(B) GREASE DISCHARGER (LOWER BEARING)

(C) GREASE DISCHARGER (UPPER BEARING)

(D) TWO M10 TAPPED GROUNDING PADS ON FRAME, DIAGONALLY OPPOSITE, WITH ONLY ONE GROUNDING STUD & TERMINAL LOCATED AS SHOWN.

(E) 4~M24 VERTICAL JACKING HOLES, 90° APART IN MOTOR BASE.

(F) REMOVABLE COVER FOR CABLE ENTRY TO BE DRILLED BY THE CUSTOMER.

TECO Westinghouse

DWG. 3A040F266 REV. 01

DWN.	S. WU	JUL. 13. 2004
CHK.	H. LIU	JUL. 13. 2004
APP.	C. WANG	JUL. 13. 2004

REV.	DATE	PREP.	REVISED	APPRVD	ISSUDE FOR

Contains information for the design of structures, systems and components..... YES ☐ NO ☐
VERIFICATION: N/A ☐ PDO/SUP. ☐ VERIFIER N1 ☐ N2 ☐

DOCUMENT PREPARED WITH CAD DO NOT MODIFY MANUALLY

PUBLIC POWER CORPORATION LAVRION V CC PP DMKT 11 21 302

METKA

FLOWSERVE

OUTLINE DIMENSION
3—PHASE INDUCTION MOTOR

METKA DWG. No.	DIN A2
KKS DWG. No.	SCALE
EA DWG. No.	SHEET 1 OF 1

Project:
LAVRION V-CCPP DMKT 11 21 302

Title: Motor Connection Diagrams
Circulating Water Pumps (5PAC10/20 AP001)

Supplier Document No:	-	Issue: 1
KKS Document No:	5-PAC-ESK-FPD-262	
Purpose of issue: For Revision		Date: 4/01/05

00-Y-X-10302-F3/I Issue 1

Prepared: JM

Reviewed: HD

Approved: SH

Note: The Wiring Diagram of the RTD´s has been removed from this document and is now part of the Accessories Terminal Box Drawing 5-PAC-EDP-FPD-264

DATE	SCHEMATIC WYE CONN 6 LEADS	MODEL

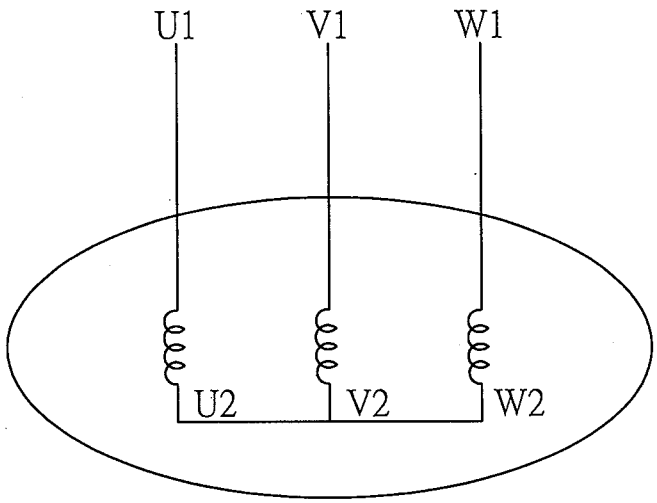

SCHEMATIC - WYE CONN - 6 LEADS

CONNECTION	ROTATION (VIEWED FROM DRIVE END)
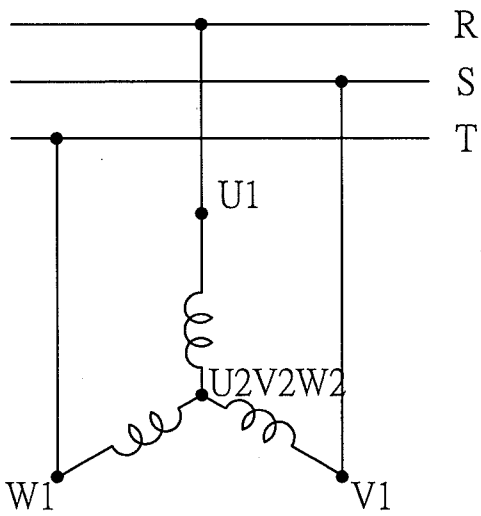	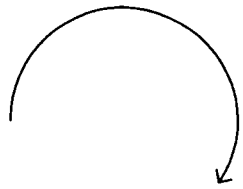

DWN.	S.HUANG	MAR・03・2003	TECO Westinghouse	DWG NO. REV: 00
CHKD.	T.HSIAO	MAR・03・2003		3A061H468
APPD.	T.HSIAO	MAR・03・2003		

DATE	SCHEMATIC SPACE HEATER	MODEL

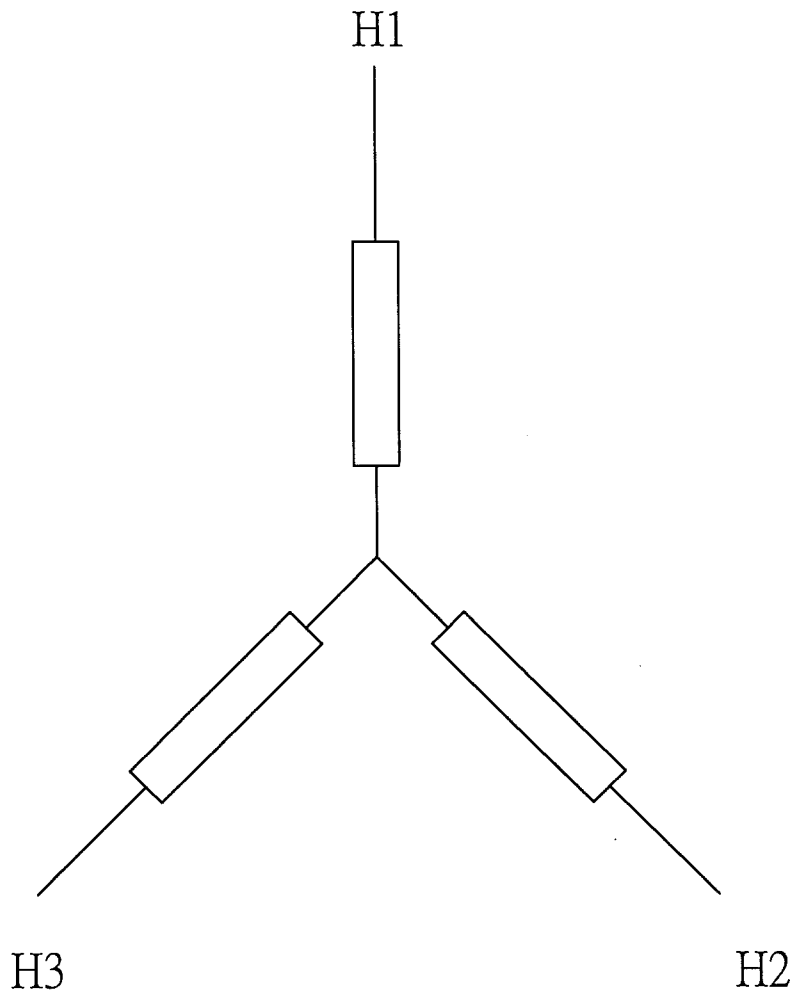

400V 3PH 800W

DWN.	S.HUANG	JUL・10・2004	TECO Westinghouse	DWG NO. REV: 00
CHKD.	T.HSIAO	JUL・10・2004		3A061H604
APPD.	T.HSIAO	JUL・10・2004		

Project:

LAVRION V-CCPP
DMKT 11 21 302

Title: Motor Instrument List

Circulating Water Pumps (5PAC10/20 AP001)

Supplier Document No:	-	Issue: 1
KKS Document No:	5-PAC-YLP-FPD-256	
Purpose of issue: For Revision		Date: 4/01/05

00-Y-X-10302-F3/I Issue 1

Prepared: NO

Reviewed: MAP

Approved: MM

FLOWSERVE

Customer: **METKA**
Project: **LAVRION V**
Tag Nº **5PAC10/20AP001**
Service **CIRCULATING PUMPS**
FPD REF: **10.07.50.10897**
P.O. -

SHEET **1**
OF **1**

Equipment	REV.	Tag	Location	Type of instrument	Manufactured/ Supplied by	Model	Medium	Unit	Messur.Range From	Messur.Range To	ALIMENT.	Output	Set Point Alarm	Set Point Trip	Drawing No.	Notes
MOTOR		5PAC10/20AP001JE21	Motor winding phase R	Temperature detector	**Minco**	**S9785PA100T260Z60**	Metal	ºC	0	200		Ohm	**130**	**150**		Pt 100 Single / 3wires
"		5PAC10/20AP001JE22	Motor winding phase S	Temperature detector	**Minco**	**S9785PA100T260Z60**	Metal	ºC	0	200		Ohm	**130**	**150**		Pt 100 Single / 3wires
"		5PAC10/20AP001JE23	Motor winding phase T	Temperature detector	**Minco**	**S9785PA100T260Z60**	Metal	ºC	0	200		Ohm	**130**	**150**		Pt 100 Single / 3wires
"		5PAC10/20AP001JE24	Motor winding phase R	Temperature detector	**Minco**	**S9785PA100T260Z60**	Metal	ºC	0	200		Ohm	**130**	**150**		Pt 100 single / 3 wires / (spare)
"		5PAC10/20AP001JE25	Motor winding phase S	Temperature detector	**Minco**	**S9785PA100T260Z60**	Metal	ºC	0	200		Ohm	**130**	**150**		Pt 100 single / 3 wires / (spare)
"		5PAC10/20AP001JE26	Motor winding phase T	Temperature detector	**Minco**	**S9785PA100T260Z60**	Metal	ºC	0	200		Ohm	**130**	**150**		Pt 100 single / 3 wires / (spare)
"		5PAC10/20AP001JE41	Cold air	Temperature detector	N.A.											
"		5PAC10/20AP001JE42	Hot air	Temperature detector	N.A.											
"		5PAC10/20AP001JE92	Detector de fugas	NAMUR DIN	N.A.											
"	Rev 1	5PAC10/20AP001JE33	Radial bearing , driven end	Temperature detector	**Teco / Teco**	**3A955**	Metal	ºC	0	150		Ohm	**90**	**95**		2 x Pt 100 / 3W
"	Rev 1	5PAC10/20AP001JE34	Radial bearing , non driven end	Temperature detector	**Teco / Teco**	**3A955**	Metal	ºC	0	150		Ohm	**90**	**95**		2 x Pt 100 / 3W

Rev.	DESCRIPTION	Name	Date
0	FIRST ISSUE	N.O	15/07/2004
	SECOND ISSUE	N.O.	04/01/2005

Pump: 45 APMA

Prepared by: N.O.Z
Checked by: M.A.P.M.
App´d by: M.M.

TITLE: **CIRCULATING MOTOR INSTRUMENT LIST**

MOTOR

REF:

DRAWING **5-PAC-YLP-FPD-256**

1

Project:

LAVRION V-CCPP
DMKT 11 21 302

Title: Motor Data Sheet

Circulating Water Pumps (5PAC10/20 AP001)

Supplier Document No:	-	Issue: 1
KKS Document No:	5-PAC-EHP-FPD-252	
Purpose of issue: For approval		Date: 8/09/04

00-Y-X-10302-F3/I Issue 1

Prepared: JM

Reviewed: IID

Approved: SH

SPECIFICATION TABLE OF 3-PHASE SQUIRREL CAGE INDUCTION MOTOR	CUSTOMER	TEE	USER	TEE
	INQ. NO.		EQUIPMENT	
	JOB NO.	FE4A014TA1 & FE4A015TA1	MACHINE	
	TOTAL SETS	1+1	ITEM NO.	

Item	Terms	Description			
1	Model	AEVE-WT001			
2	Code or Standard	Dimensions	Frame Assignment	Performance	Test
		IEC	TECO	IEC	IEC
3	Rating	625 kW 12 Pole 6000 Volt 3 Phase 50 Hz			
4	Service Duty	Continuous Rating			
5	Starting Method	D.O.L. or 85% R.V.S.			
6	Rotation	clockwise (View From Drive End)			
7	Drive Method	Direct Coupling			
8	Environment	Amb. Temp.: -20 ~ 40 ℃ (see note 6)			
		Humidity : Less Than 95 %RH			
		Altitude : Up to 1000 M			
9	Enclosure & Protection	IPW55 : Totally Enclosure Outdoor			
10	Cooling	IC611 : Fan Cooled With Built-in Air Cooler			
11	Mounting	IM3011: VSS, Flange			
12	Dimensions	Dr# 3A040F266(REV.01) Frame No ： 710A			
13	Frame & Bracket	Frame : Steel Plate Bracket : Steel Plate			
14	Fan & Fan Cover	Fan : Steel Plate Fan Cover : Steel Plate			
15	Terminal Box	Steel Plate			
16	Lead Terminals	TLKF(35-10)X6			
17	Lubricant	Alvania R3 Grease (SHELL Oil Co.)			
18	Painting	Color : MUNSELL 7.5BG4/2			
19	Stator Winding	Ins. Class F insulation rating is 10KV			
20	Rotor Conductor	Cu-Alloy			
21	Starting Performance	LRC ≦ 468Amp LRT/FLT 80 %			
22	Operating Performance	% Load	100	Break Down Torque	
		Amp.	85.2	230 %FLT	
	At Rated 6000 Volt	Eff.%	94.1	Temp. Rise Limit.(R)	
		P.F.%	75.0	Stator 80 ℃	
		R.P.M.	490		
23	Note	1. With Space Heater : 3φ 400V 800W 2. With Winding RTD : PT 100Ω/0℃ 6pcs 3. With Bearing RTD : PT 100Ω/0℃ 2pcs(DUAL ELEMENT) 4. Noise : Below 80dBA at 1 Meter Distance No Load 5. Approx Weight : 12800KGS 6. As the insulation is Class F, the motors can work with max.amb.temp. 45ºC			

APPD.	Ming	AUG. 20 2004	TECO Westinghouse	DWG NO.
CHKD.	H.DEE	AUG. 20 2004		3A057H186-14894
DWN.	S.HUANG	AUG. 20 2004		REV.01 1/1

Coupling Manual

The crowned tooth gear couplings type HAV, MSVS and MTV, specially designed for vertical mounting, basically consists of:

Pos. 1-Hub.
2-Sleeve.
3-O-Ring.
4-O-Ring.
5-Bolt.
6-Self-locking Nut.
7-Support plate.
8-Oil plug.
9-Pivot.

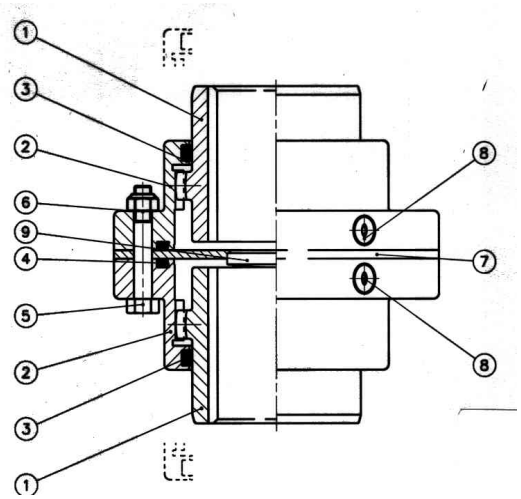

INSTALLATION

- Parts forming the coupling shall be cleaned carefully before mounting. This shall be applied to teeth specially.
- Place the sleeves on the shafts.
- Insert hubs on shafts. To help mounting slightly grease with molibden bisulfure on cleaned seats.
- Hubs can be mounted by pressing, heating with burner or preferably in an oil bath not above 100ºC.
- With support plate outside, place shaft ends with the gap “a” according the figure. Gap “a” must be taken from tables bellow according the type and size of coupling.
- Procede to shafts alignment performed by means of a straight edge and a thickness gauge, or using an inside caliper, as in the figure. An accurate alignment result is obtained using a dial indicator.
- Insert center support plate within the gap “a”. Do not forget that crowned pivot must be in contact with lower shaft end.

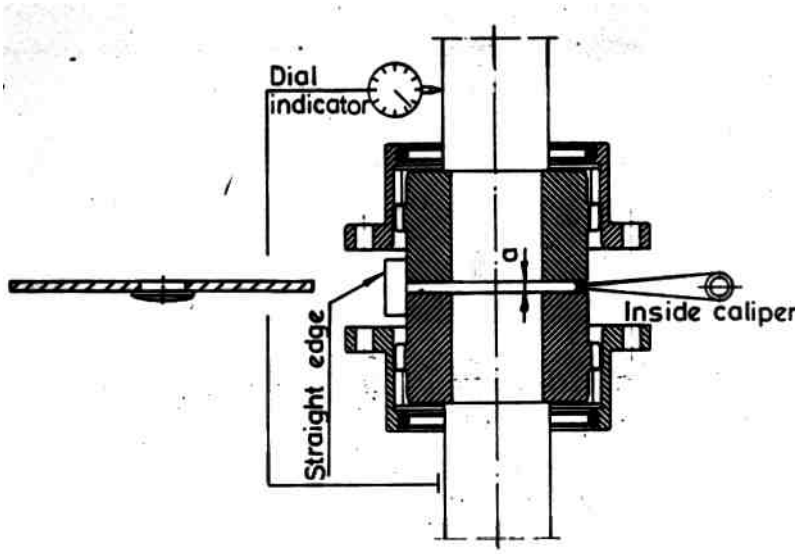

LUBRICATION

Once the coupling is mounted, it must be filled with a lubricant from table below or equivalent.
There a two oil plugs per each half for the lubrication, Pos.8.
¡Remark! Take care to fill in the lubricant in both half couplings as they are separated by the central support plate Pos.7.
Make sure that upper half coupling is completely fill with grease. Bottom half coupling must be filled with the quantity according to the table.

Remove and change the grease every 3.000 hours.

Recommended Lubricants & Quantity

Normal Speed And Duty		Normal Speed and Heavy Duty Service	
Amoco	Amoco coupling grease	Klüber	Klüberplex Ge 11-680
Castrol-Tribol	Tribol 3020/1000-1	Texaco	Coupling grease KP 0/1 K-30
Cepsa-Krafft	KEP 1		
Esso-Exxon	Unirex RS 460, Pen-0- Led EP	**HIGH SPEED[1]**	
Fina	Ceran Ep-0		
Klüber	Klüberplex GE 11-680	Amoco	
Mobil	Mobilgrease XTC,	Esso-Exxon	Coupling grease
	Mobiltemp SHC 460 spezial	Klüber	Unirex RS-460
Shell	Albida GC1	Mobil	Klüberplex Ge 11-680
Texaco	Coupling grease KP 0/1 K-30	Texaco	Mobilgrease XTC
Verkol	Verkol 320-1 Grado 1		Coupling grease KP 0/1 K-30

[1] High speed is considered for peripheral velocity above 80 metros/second.

For working temperatures out of this range please consult.

Indicated lubricant quantity is for each coupling hub

COUPLING HAV												
Size	10	15	20	25	30	35	40	45	50	55	60	70
“a” mm.	6	6	6	8	8	11	11	13	13	14	14	18
Lubricant Quantity (Kg)	0.02	0.03	0.085	0.12	0.18	0.25	0.35	0.65	0.875	1.1	1.4	2.25

COUPLING MSVS													
Size	5	10	20	35	60	105	150	210	325	430	600	800	1150
“a” mm.	6	6	6	8	8	8	10	10	10	12	12	12	16
Lubricant Quantity (Kg)	0.035	0.05	0.06	0.11	0.15	0.20	0.30	0.50	0.56	0.82	1	0.62	1

COUPLING MTV												
Size	42	55	70	90	100	125	145	165	185	205	230	260
“a” mm.	8	8	8	9	9	12	13	14	14	16	16	16
Lubricant Quantity (Kg)	0.02	0.03	0.085	0.12	0.18	0.25	0.35	0.65	0.875	1.1	1.4	2.25

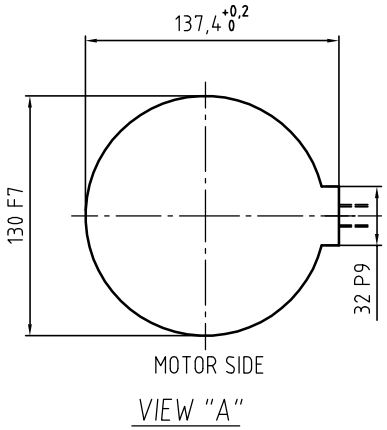

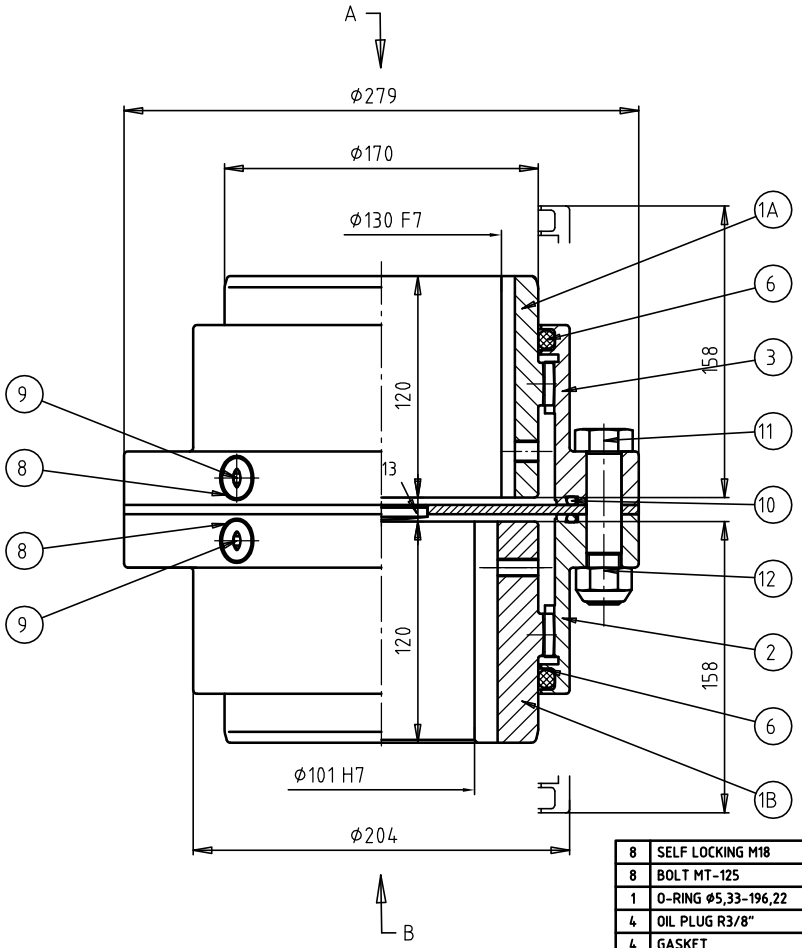

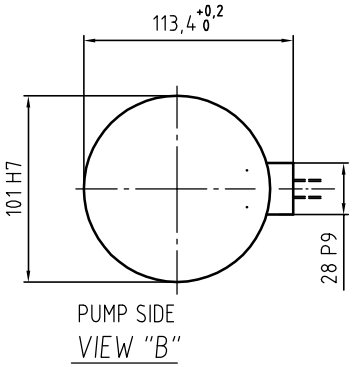

REF. 10.07.77.10897
PUMP 45APMA
REQ. RT10897A

NOMINAL TORQUE OF COUPLING (Nm): 17200
MAX. SPEED (r.p.m.): 3600

Dynamically balanced V= 496 rpm Q= 2.5

TIGHTENING TORQUE (Nm): 230

LUBRICATION:
QUANTITY OF GREASE:
UPPER SIDE (MOTOR SIDE 0,5 Kg
BOTTON SIDE (PUMP SIDE) 0,32 Kg
TYPE OF GREASE (ACCORDING TO SHEET 1610-M)

N.	DENOMINACION	Marca	Dibujo N.	Material	Modelo	Peso(Kg)
8	SELF LOCKING M18	12		8	DIN-985	
8	BOLT MT-125	11		8.8		
1	O-RING ϕ5,33-196,22	10		NBR		
4	OIL PLUG R3/8"	9			DIN-908	
4	GASKET	8			DIN-7603	
2	O-RING ϕ10-168,5	6		NBR		
1	SLEEVE	3		F-114		
1	SLEEVE	2		F-114		
1	HUB	1B		F-115		
1	HUB	1A		F-115		

Fecha -
Modificaciones -
Rev. -

N° de oferta: –
N° de pedido: –

	Fecha	Nombre
Dibujado	16-09-04	IÑAKI
Revisado y Aprobado	21-01-04	MIKEL

JAURE,S.A.
ZIZURKIL (GUIPUZCOA)

UNE-EN-ISO 9001
EMPRESA CERTIFICADA

Escala: – | Material: – | Tratamiento: – | Peso(Kg): – | N°de pieza: –

N°de PLANO: OF-14888 | REV.

Nombre de la pieza: –

Nombre del conjunto: COUPLING MTV-125

Sustituye a –
Sustituido por –

JAURE, S.A. ERNIO BIDEA, S/N 20150 ZIZURKIL (Guipúzcoa) - SPAIN
Tel: (+34) 943 690054 Fax: (+34) 943 690295
E-mail: Dpto.Comerical: sales.dep@jaure.com **Dpto.Técnico:** tech.dep@jaure.com **WEB : http://** www.jaure.com

Operating Basis

EQUIPMENT MAIN FUNCTION

The main function of the circulating water pumps is to deliver circulating water from the seawater basin to the main condenser. This function is carried out by two 50% capacity circulating water pumps.

Spare Parts
Lubricants list

Project:

LAVRION V-CCPP
DMKT 11 21 302

Title: Complete Spare Parts List without Prices

Circulating Water Pumps (5PAC10/20 AP001)

Supplier Document No:	-	Issue: 1
KKS Document No:	5-PAC-MLJ-FPD-104	
Purpose of issue: Final		Date: 31/05/05

00-Y-X-10302-F3/I Issue 1

Prepared: TA

Reviewed: MM

Approved: AF

LIST OF SPARE PARTS AND INTERCHANGEABLE PARTS

FOR ..... YEARS OF CONTINUOUS OPERATION

CUSTOMER	METKA (LAVRION V CCPP)
SUPPLIER	FLOWSERVE SPAIN S.A.
TECHNICAL SHEET No.	QUOTE NO.5122/04
DATE	25/11/2004

TYPE OF EQUIPMENT: **CIRCULATING WATER PUMPS 45APMA**

ORDER NUMBERS OF THE EQUIPMENT: 5PAC 10 AP001; 5PAC 20 AP001

ITEM No.	DESCRIPTION OF THE PART	No. OF SECTION DRAWING BY MANUFACTURER	PART NO. IN SECTION DRAWING BY MANUFACTURER	MATERIAL	DELIVERY SCHEDULE IN MONTHS	MANUFACTURER SERIAL NUMBER	CUSTOMER CODE NUMBER	AMOUNT TO ORDER	MANUFACTURER MODEL (UNIT PRICE EUR)	1	2	3	4	5	6	7	8	9	10	11	12	13	14	15	16	17	TOTAL NUMBER OF PARTS IN SERVICE	SPARES RECOMMENDED BY THE MANUFACTURER
								TOTAL NUMBER OF EQUAL EQPT.		2																		
								Supplier ID		5PAC 10 A	5PAC 20 A																	
										45APMA	45APMA																	
1	IMPELLER SPLIT RING	45APMA50OXE51	0000	A276 UNS	2	M149509/1	4E+08			1	1																2	1
2	SPLIT RING		0000A	A276 UNS	2	M149509/1	4E+08			3	3																6	3
3	SPLIT RING		0000B	A276 UNS	2	M149509/1	4E+08			3	3																6	3
4	STUFF. BOX SPLIT RING		0000C	A276 UNS	2	M149509/1	4E+08			1	1																2	1
5	CASING WEAR RING - REAR		0500	A890 GR1	3	M149509/1	4.05E+08			1	1																2	1
6	CASING WEAR RING - FRONT		0508	WAUKESH	3	M149509/1	4.05E+08			1	1																2	1
7	STUFF. BOX SLEEVE		0709	A276 UNS	2	M149509/1	4.07E+08			1	1																2	1
8	SLEEVE		0710	A276 UNS	2	M149509/1	4.07E+08			1	1																2	1
9	SLEEVE		0710A	A276 UNS	2	M149509/1	4.07E+08			3	3																6	3
10	SLEEVE		0710B	A276 UNS	2	M149509/1	4.07E+08			3	3																6	3
11	COLLAR		0852	A276 UNS	2	M149509/1	4.09E+08			1	1																2	1
12	BEARING		0900	UNS S318	2	M149509/1	4.09E+08			1	1																2	2
13	BEARING		0900A	BTR SIV.C	2	M149509/1	4.09E+08			3	3																6	6
14	BEARING		0900B	BTR SIV.C	2	M149509/1	4.09E+08			1	1																2	2
15	O-RING		101	BUNA N	1	M149509/1	5.01E+08			1	1																2	2
16	O-RING		101A	BUNA N	1	M149509/1	8.53E+08			1	1																2	2
17	SHAFT		1102	A276 UNS	3	M149509/1	4.11E+08			1	1																2	1
18	SHAFT		1104	A276 UNS	3	M149509/1	4.11E+08			2	2																4	2
19	SHAFT		1107	A276 UNS	3	M149509/1	4.11E+08			1	1																2	1
20	IMPELLER		1200	FERRALIU	4	M149509/1	6.12E+08			1	1																2	1
21	GASKET		1300	KLINGER	1	M149509/1	3302401			1	1																2	2
22	SET OF PACKING		1320	MF-330	1	M149509/1	8.48E+08			1	1																2	4
23	NUT		2006	CARBON S	2	M149509/1	SEE THRUST BEARING ASSY			1	1																2	1
24	KEY		2112	A276 UNS	1	M149509/1	SEE THRUST BEARING ASSY			1	1																2	1
25	KEY		2116	A276 UNS	1	M149509/1	42116001H			5	5																10	5
26	KEY		2119	A276 UNS	1	M149509/1	4.21E+08			1	1																2	1
27	KEY		2119A	A276 UNS	1	M149509/1	4.21E+08			6	6																12	6
28	KEY		2119B	A276 UNS	1	M149509/1	4.21E+08			1	1																2	1
29	POSITIONING RING	MW-102356 THRUST BEARING	0000	F-1140	2	M149509/1	4E+08			1	1																2	1
30	DISTANCE RING		0000A	F-1140	2	M149509/1	4E+08			1	1																2	1
31	PUMPING RING		0000B	F-1140	2	M149509/1	4E+08			1	1																2	1
32	OIL LEVEL INDICATOR		097	BRONZE/C	1	M149509/1	5.01E+08			1	1																2	1
33	O-RING		101	BUNA N	1	M149509/1	5.01E+08			1	1																2	2
34	BALL BEARING		150	STEEL	1	M149509/1	5.02E+08			1	1																2	2
35	SPHERICAL ROLLER BEARING		150A	STEEL	1	M149509/1	5.02E+08			1	1																2	2
36	SPRING		271	F-1410	1	M149509/1	5.03E+08			6	6																12	6
37	SPRING		271A	F-1410	1	M149509/1	5.03E+08			6	6																12	6
38	BREATHER		351	F-1120	1	M149509/1	5.04E+08			1	1																2	1
39	THRUST SLEEVE		0840	F-1140	2	M149509/1	4.08E+08			1	1																2	1
40	V-RING		1300	NITRILE	1	M149509/1	4.13E+08			1	1																2	2
41	V-RING		1300A	NITRILE	1	M149509/1	4.13E+08			1	1																2	2
42	NUT		2006	CARBON S	2	M149509/1	4.2E+08			1	1																2	1
43	KEY		2112	F-1140	1	M149509/1	4.21E+08			1	1																2	1

NOTES (1) THE PROPOSAL FOR SPARE PARTS SHALL BE EXTENSIVE TO ALL EQUIPMENT OFFERED AND/OR SUPPLIED BY THE SUPPLIER
(2) ALL SECTION DRAWINGS REFERENCED SHALL BE TRANSMITTED WITH THE SPARE PARTS PROPOSAL
(3) ALL SPARE PARTS SUPPLIED SHALL BE DULY LABELLED, CORRECTLY IDENTIFIED AND APPROPRIATELY PACKED

PRICES WX-WORKS, PACKING INCLUDED
VALIDITY : 90 DAYS

TYPE OF EQUIPMENT	TYPE OF LUBRICANT	QUANTITY	FREQUENCY OF COMPLETION	FREQUENCY OF REPLACEMENT	PROPOSED MANUFACTURERS	COMMERCIAL NAME	SPECIFICATION	REMOVING / INSPECTION / CLEANING INSTRUCTIONS
IP MOTORS	GREASE	Drive end bearing: 80 gr Non drive end bearing: 80 gr	only replacement	30 days	ESSO, SHELL	ESSO UNIREX LITHIUM N3	grease	MOTOR MANUAL
HP MOTORS	OIL	Drive end bearing: 4.5l Non drive end bearing: 2.5l	only replacement	1000 hours	ESSO, SHELL	SHEEL CASSIDA FLUID HF 32	ISO VG32	MOTOR MANUAL
CONDENSATE MOTORS	GREASE	Upper bearing: 220 gr Lower bearing: 140 gr	only replacement	30 days	ESSO, SHELL	ALVANIA R3 GREASE (Shell)	grease	MOTOR MANUAL
IP PUMPS	OIL	4 l	only replacement	3000 hours	ESSO, SHELL	SHEEL CASSIDA FLUID HF 32	ISO VG32	PUMP MANUAL
HP PUMPS	OIL	(voith)	only replacement	3000 hours	ESSO, SHELL	SHEEL CASSIDA FLUID HF 32	ISO VG32	PUMP MANUAL
CONDENSATE PUMPS	OIL	9 l	only replacement	3000 hours	ESSO, SHELL	SHEEL CASSIDA FLUID HF 22	ISO VG22	PUMP MANUAL
VSC	OIL	500 l	only replacement	6000 hours	CASTROL, SHELL	CASTROL Hyspin SP 32	ISO VG31	VOTIH MANUAL
CIRCULATING WATER PUMPS	OIL	12 l	only replacement	3000 hours	ESSO, SHELL	SHEEL CASSIDA FLUID HF 32	ISO VG32	PUMP MANUAL
CIRCULATING WATER MOTORS	GREASE	Upper bearing: 450 gr Lower bearing: 140 gr	only replacement	30 days	ESSO, SHELL	ESSO UNIREX LITHIUM N3	grease	MOTOR MANUAL

Special Tools

"No special tools are necessary for these pumps, understood by Special Tools those that are not commercial items and that are especifically designed for these pumps"

"PLEASE REFER TO OFICIAL COMMUNICATION FPD-MET-BCP-133 SENT ON 10/12/04"

Project:

LAVRION V-CCPP
DMKT 11 21 302

Title: Installation & Operation & Maintenance Manual

(Condensate Extraction Pumps 5LCB 10/20 AP001)

Supplier Document No:	-	Issue: 3
KKS Document No:	5-LCB-GMP-FPD-233	
Purpose of issue: FINAL		Date: 11/07 /05

00-Y-X-10302-F3/I Issue 1

Prepared: AF

Reviewed: MM

Approved: JM

LAVRION V
METKA S.A

Type 243-APKD-4

Pump manual

Ref. FLOWSERVE: 10.07.50.10896

Flowserve Spain,S.A.
Avenida Fuentemar,26-28
Pol.Ind.-28820 COSLADA (Madrid)

INDEX

Security instructions

PUMP DIVISION
COSLADA (MADRID)

SAFETY INSTRUCTIONS
ENGLISH

This safety instructions and warnings must be followed in addition to the instructions found in the Installation, Operation and Maintenance Manual for the specific equipment to which they are attached.

IMPORTANT: This page of safety instructions is intended as a guide and neither modifies nor restricts in any way the contractual terms set out in the sales agreement. Nor does it affect the equipment guaranties.

WE RECOMENDED THAT FOR ANY ASSEMBLY, REPAIR, STARTING-UP OR SERVICE WORK, YOU USE THE SPECIALISED SERVICES OF FLOWSERVE Pump Division AFTER-SALES STAFF.

DANGER!

Throughout the operation of the pumps and complementary equipment, situations occur involving various potential risks: pressure, temperature, acoustics, fluid projection, rotating parts, etc.. All of these can give rise to serious personal and material damage if the safety and maintenance recommendations for the equipment are not observed.

DANGER!

IN THE EVENT OF ANY MALFUNTIONING, SWITCH OFF THE AFFECTED EQUIPMENT IMMEDIATELY.

CAUTION!

Those persons in charge of installation must ensure that all work is carried out at all times by **qualified personnel who have received adequate instruction and training and are acquainted with the interpretation and application of safety standards.** They should have available those necessary means and instructions which will enable them to undertake the work correctly and their work should be supervised by skilled and responsible staff. Care should also be taken to prohibit anyone who is not suitably qualified from working with the pumps and their equipment.

CAUTION!

The equipment operating conditions shown on the pump's name plate and in the ordering specifications should not be modified **without written consent** from FLOWSERVE Pump Division. In the event that modifications are made without FLOWSERVE's authorisation, **the client will be responsible** for ensuring that these meet the safety standards applicable. Should you require any further information regarding new applications of the product or its operation, please contact FLOWSERVE Pump Division Sales Office. In doing so, the serial number and pump type must be quoted.

CAUTION!

The equipment's Service Manual sets out the periodic services which must be performed to ensure that the equipment will operate correctly.

Pump Manual

1 STORAGE

TABLE OF CONTENTS

0 STORAGE IN FLOWSERVE WORKS

The complete storage procedure included within this document has been prepared according to Flowserve internal storage procedures. If pumps should stay in Flowserve works for a longer than usual period, sections 3 and 4 will be applied consequently.

1 EXTENDED STORAGE REQUIREMENTS

During extended storage prior to installation and from the time of installation until commercial operation, precautions must be taken to protect the pump from deterioration. The various parts of the pump are protected prior to shipment by applying preservatives and paint.

However, during shipment and handling the preservatives are subjected to conditions that can cause their removal. Also, during extended periods of time the preservatives may deteriorate. The following procedures should be followed to prevent deterioration of the pump during the extended storage period. These procedures may also be supplemented by the experience of the person(s) performing the tasks.

It should be noted, that unless otherwise to, full responsibility and costs associated with the storage and inspection of this rest with the customer.

CAUTION

AT NO TIME DURING STORAGE OF HANDLING IS THE PUMP TO BE ROTATED ON OR SUPPORTED BY THE SUCTION BELL (360).

2 INSPECTION UPON ARRIVAL

When the pump is received is should be inspected for damage or other signs of rough handling. If any is found it should be reported to the carrier immediately.

Inspect the preservative coating on the Various parts. If necessary, renew the preservative in areas where it has been rubbed off or scraped.

Inspect all painted surfaces. If necessary, touch up the areas where paint has been chipped or scraped.

The rotor is shipped in a blocked position. Do not remove blocking until unit is to be installed. This will minimize bearing loads and rotor distortion.

Inspect all covers over pump openings and piping connections. If covers or seals for the covers are damaged or loose. They are to be removed, and a visual inspection made of the accessible interior areas for accumulations of foreign materials or water. If necessary, clean and recoat the interior parts preservative as noted above to restore the parts to the "as shipped" condition. install or replace covers and fasten securely.

3 STORAGE

If at all possible, the pump and its component parts should be stored indoors where they will be protected from elements. If it is not possible to store pump and its components indoors, precautions must be taken to protect them from the elements. Regardless of whether storage is inside or outside, the storage area should be vibration-free. All boxes marked for inside storage should be stored indoors. When stored outdoors the pump and its components should be protected from dirt, dust, rain, snow, or other unfavorable conditions by heavy gauge plastic sheets, tarps, canvas, waterproof burlap or other suitable coverings.

All equipment stored in the horizontal position must be placed upon skids or blocks to prevent contact with the ground and surface contaminants. Equipment must be adequately supported to prevent distortion and bending.

If pump is stored vertically, rotor is to be lifted and blocked to dimension shown on rotor plate.
When selecting a storage area the following should be taken into consideration:

1. The deterioration of the equipment will be proportionate to the class/type of storage provided.
2. The expenses involved in restoring the equipment at time of operation will be proportionate the class/type of storage provided.

4 INSPECTION AND MAINTENANCE

The stored equipment is to be placed on a periodic inspection schedule by the customer.

NOTE

THE RESPONSABILITY FOR SETTING UP AN INSPECTION SCHEDULE REST WITH THE CUSTOMER AND WILL BE DEPENDENT UPON THE CLASS/TYPE OF STORAGE PROVIDED. IT WOULD BE EXPECTED THAT INITIALLY INSPECTION WOULD OCCUR WEEKLY, THEN DEPENDING UPON THE INSPECTION REPORTS FAVORABLE OR UNFAVORABLE , INSPECTION WOULD CONTINUE WEEKLY, MONTHLY, OR QUARTERLY, AS MAY BE DETERMINED. INSPECTION REPORTS MUST BE KEPT ON FILE.

Each inspection should consist of a general surface inspection to assure that:

(a) Pump supports and rotor blocking are firmly in place.

(b) Pump covers openings are firmly in place.

(c) Pump covering, plastic or tarps, is firmly in place. Any holes or tears must be repaired to prevent entrance of dirt or water.

(d) If rusting occurs on exterior surfaces clean and repaint or recoat with preservative.

(e) Check individually wrapped parts for signs of deterioration. If necessary, renew preservative and wrapped.

Six Months Prior To Installation:

(a) An inspection of all periodic inspection records as kept on file by the customer, and all inspection reports that have been compiled the storage period.

(b) An inspection of the storage area to determinate the "as stored" condition of the equipment prior to any protection covers being removed.

(c) An inspection of the equipment with protection covers and flange covers removed.

(d) Depending upon the length of time the equipment was stored, the class/type of storage provided, (i.e.: indoor, heated, unheated, ground floor, concrete floor, out-of-doors, under roof, no roof, waterproof covering, on concrete, on ground) and as a result of the inspection of a, b and c above the Flowserve representative may require a partial or complete dismantling of the equipment.

(e) Dismantling may require restoration of painted or preserved surfaces, and/or replacement of gaskets, "O" rings, mechanical seal and bearings.

All the cost due to inspection, dismantling, reparation, restoration of parts and materials and assembly will be at customer's charge. All labor, tools, cranes, etc. will be provided by the customer.

Upon completion of the inspection the Flowserve. representative shall submit a report to the customer, and to the Manager of Customer Service, stating in detail the result of the inspection.

One month prior to installation if it is required by customer a Flowserve representative will make a final inspection, to check if all damages indicated in the report of six months inspection have been repaired and the equipment is ready for installation.

Upon completion of the inspection the Flowserve representative shall submit a report to the customer, and to the Manager of Customer Service, stating in detail the result of the inspection.

All cost due to final inspection will be at customer's charge.

5 START-UP

Prior to and during start-up any requirement for the services of a Flowserve representative will revert back to the original contract agreement for the equipment purchased.

6 DRIVERS

Generally rotors should be blocked to relieve bearing loads. Storage must be indoors and dry. See the specific manufacturers storage requirements.

7 LUBRICATION

The graphite bearings are water lubricated. There is also an external oil protection for carbon steel pieces.

Thrust bearing is lubricated by oil. Use a good ISO VG 32 mineral grade. Recommended, change interval 3000h.

2 ERECTION

TABLE OF CONTENTS

0 DESCRIPTION

The condensate extraction 243APKD-4 is a vertical four stage double suction caisson type pump driven by a vertical flange mounted motor.

Referring to the sectional assembly drawing the five stage pumping unit is fitted with shrouded impellers of which the first stage is low NPSHR design. The pumping unit is bolted to the underside of the central discharge branch of the fabricated discharge head (361) and is contained in the suction caisson (359) which is bolted to the main flange of the discharge head.

The complete assembly is held in the vertical position by the soleplate (471).

The upper face of the discharge head carries the stuffing box extension (264) with the mechanical seal (429) and the motor support head (172) which also carries the thrust bearing housing (159). Hand access holes are provided in the support head to permit inspection and maintenance of mechanical seal, thrust bearing and coupling.

The drive motor is flanged to the top of the support head (172) and is connected to the pump by a flexible membrane coupling.

1 FOUNDATION

The General Arrangement Drawing provides all necessary anchor bolts information.

Install the foundation bolts.

The holes in the soleplate have a clearance to allow leveling and alignment during installation.

Make sure that the threaded part of the anchor bolt is long enough to fasten the shell flange.

For the soleplate installation, the following steps must be observed:

STEP 1

Install appropriate leveling plates or metal wedges about 35 mm between the anchor bolts onto the concrete.

Before grouting, make sure that the concrete plinth is rough enough and free of dust.

Carry out a preliminary leveling over these wedges, shimming them if necessary, and fix them to the concrete by grouting. Clean the upper surface. (See Figure 1)

STEP 2

Install the foundation plate (471) on the wedges and level it. Clean the upper surface of the soleplate.

STEP 3

Check by measuring on the upper surface that the tolerance on level is less than 0.25 mm/m

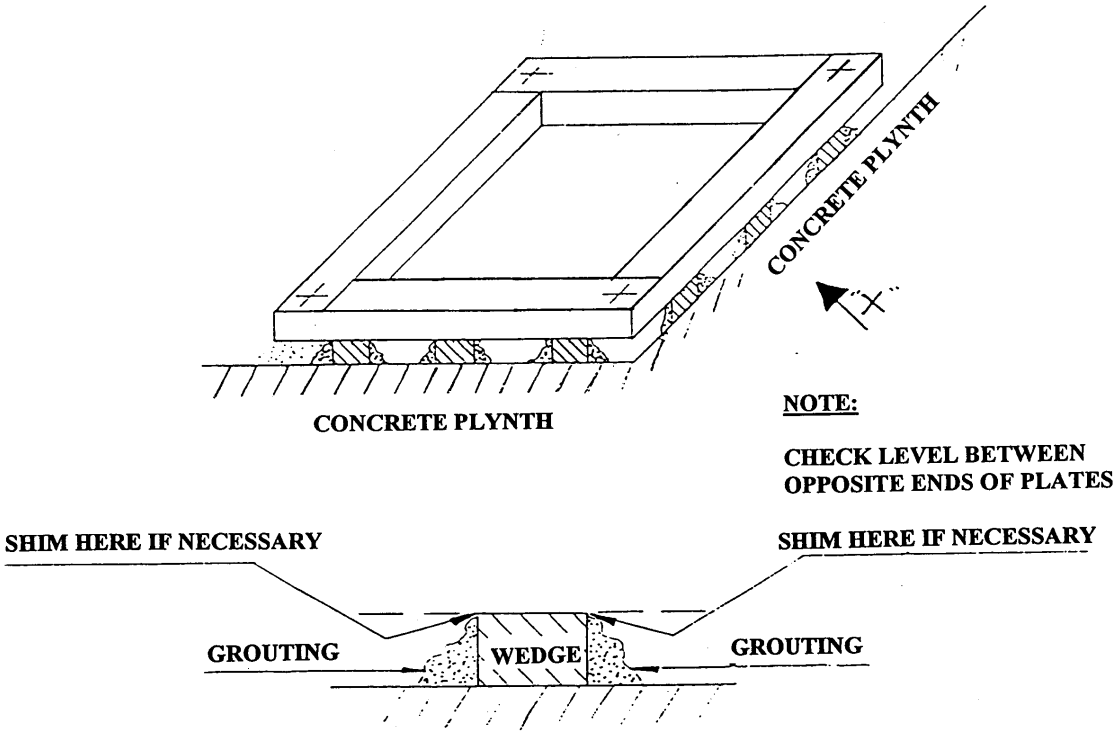

Figure 1

STEP 4

Once the correct soleplate leveling is achieved, slowly pour the grouting making sure the overall surface is grouted. Grouting should be non-shrinkable type.

STEP 5

Check the grouting is dry, the leveling is within tolerance, and if so, tighten the anchor bolts nuts.

2 INSTALLATION

The outer shell (359) is shipped separate from the rest of the pump, which is delivered fully assembled. Remove all shipping straps and blocking and proceed according to the following procedure.

STEP 1

Rig the shell (359) to an overhead hoist and lower it into the pit until the shell flange is resting onto the foundation. Install the shell (359) to foundation anchor bolting. After the shell has been properly installed, use the machined surface to re-check the leveling.

STEP 2

Install “O” ring (456B) on shell (359) flange.

STEP 3

Install lifting slings as shown in Figure 2 around the discharge head (361) flange and casings (1A/B/C). Rig to an overhead hoist (make certain that the slings can carry the weight of the pump) and raise the pump over the pit. Check pumping element to make sure all shipping straps and blocking have been removed. Lift the pump from horizontal position to vertical position. Remove lifting slings from casing. Lower the pump into the shell (359).

CAUTION
AT NO TIME SHOULD THE PUMPING ELEMENT BE ROTATED ON THE SUCTION HEAD OR THE FIRST STAGE CASING

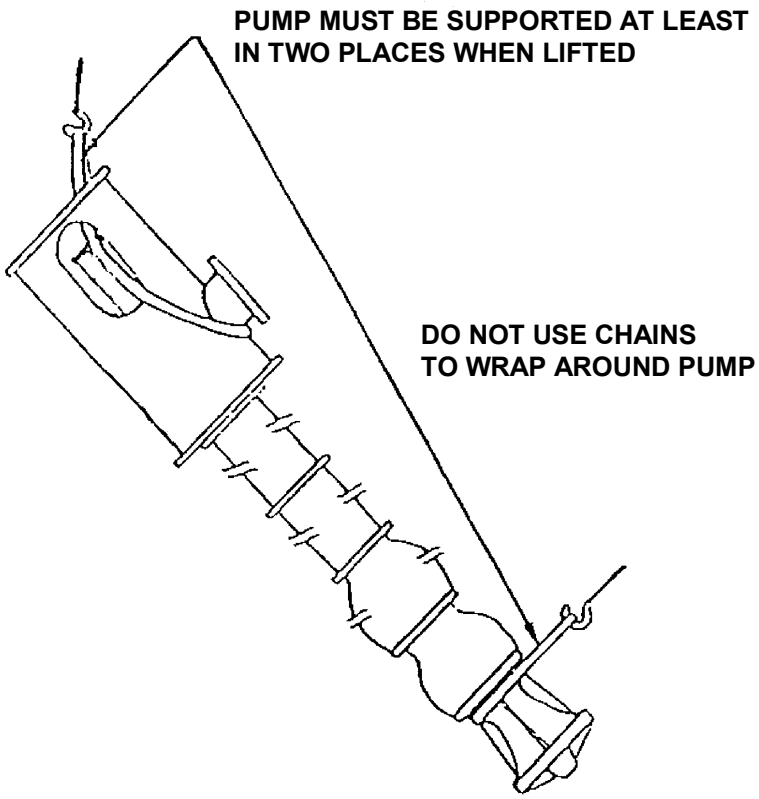

Figure 2

STEP 4

Install capscrews in the shell (359) flange and discharge head (361) flange.

STEP 5

Remove the eyebolts and cables supplied for lifting the pump.

STEP 6

To install motor and coupling refer to “MOTOR INSTALLATION AND ASSEMBLY OF MOTOR-PUMP COUPLING” (Section 6).

3 MECHANICAL SEAL

Pump is equipped with a double mechanical seal. For installation and maintenance, refer to the mechanical seal instructions, and the mechanical seal drawing included in the end of the manual.

4 ELECTRIC MOTOR

Pump is driven by an electric motor. For installation refer to motor manufacturer's instructions and motor drawing, included in the end of the manual.

5 COUPLING

Pump shaft is divided in two sections, lower shaft (10B), intermediate shaft (10A).

Motor shaft is coupled to pump shaft (10B) by means of a flexible coupling. A standard IDP shaft coupling is also used to join shaft-discharge head (10B) to intermediate (10A) pump shaft which drives the hydraulic end of the pump.

For installation of flexible coupling refer to couplings manufacturer's instructions and couplings drawings, included in the end of the manual.

6 MOTOR INSTALLATION AND ASSEMBLY OF MOTOR-PUMP COUPLING

When installing the motor and making up the motor-pump coupling (see Section 5), the following procedure is recommended to ensure satisfactory pump operation, performance and service-life of parts.

STEP 1

Clean and debur the mounting flanges of motor and support head.

STEP 2

Motor half coupling is already mounted on motor shaft when pump is shipped. Install motor onto motor support (172). Install motor hold down bolting nut, but do not tighten.

STEP 3

Check the total side play of motor shaft dial indicator mounted as shown in Figure 3. Side play should be restricted to 0.05 mm in any direction.

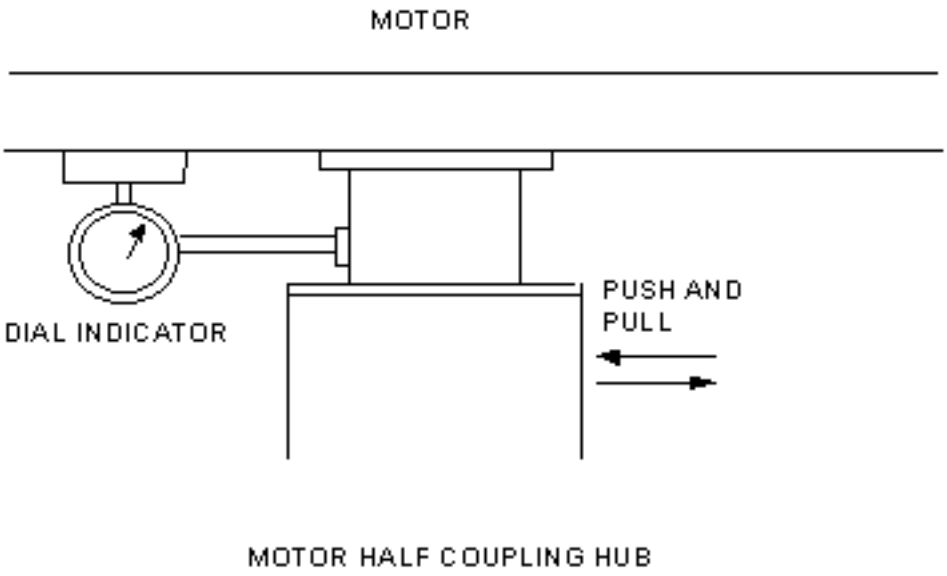

Figure 3

STEP 4

Referring to Figure 4, make up a rigid bracket which will be connected to the motor half coupling and accommodate a dial indicator which will be used to sweep the pump shaft.

NOTE

Gland studs must be removed to allow indicator to sweep shaft.

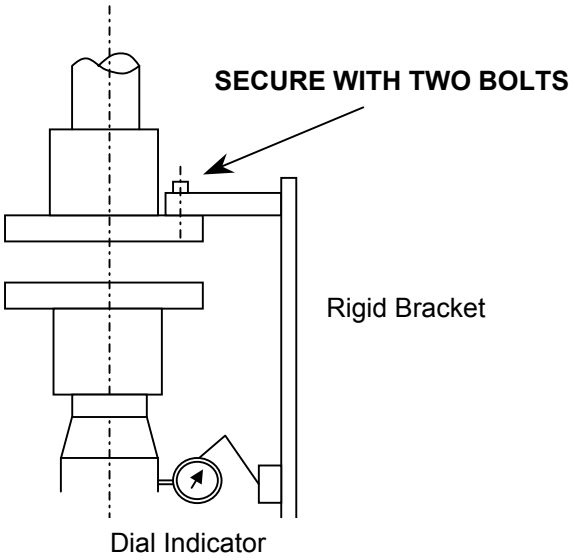

Figure 4

STEP 5

Provisions shall be made to manually rotate the motor shaft with a dial indicator sweeping the pump without inducing excessive deflection in the “Rigid Bracket”.

STEP 6

Rotating the motor shaft, read and record the total indicator readings on the pump shaft in two directions 90 degrees apart. Move the motor in either or both directions until the total indicator reading is lower than ± 0.1 mm.

STEP 7

After obtaining alignment, install dowels (provided) between motor and discharge head and manually tighten motor hold down bolting.

STEP 8

Re-check the total indicator readings and record. Remove alignment devices.

STEP 9

Remove the bolts supporting pump half coupling hub. Carefully lower pump half coupling down shaft (10B) as far as it will go.

STEP 10

Set the rotor clearance as per “ROTOR SETTING” instructions (Section 7).

STEP 11

Check the motor rotation as per “CHECK MOTOR ROTATION” instructions (Section 7).

STEP 12

Through the hand holes mount the bearing housing instrumentation.

STEP 13

Install the hand hole covers in windows of support head.

7 ROTOR SETTING & DRIVER ROTATION

The correct rotor setting for your pump is shown on the “Rotor Setting Plate” attached to the pump. When pump is shipped, rotor setting is already set. In case of improper adjustment or when mounting pump after having been dismantled, follow these steps. Before start-up, the rotor setting must be checked to assure it is correct. Please refer to Section 8 Running Clearances.

STEP 1

Install indicator bracket to measure the total vertical travel of the rotor. Determine that the pump rotor is in the full down position and set the dial indicator at zero.

STEP 2

Determine that the adjusting nut (69) is in its full down position.

With the pump rotor in the full down position, raise shaft from an eyebolt screwed to the shaft end to the upper limit of its travel.

Measure the total vertical rotor travel by use of the dial indicator. Divide the total vertical measurement in half and record this number.

STEP 3

With the pump rotor in the full down position again, reset the dial indicator at zero.

STEP 4

Turn the adjusting nut until the distance it has moved away from its lowest position equals one half of the total vertical rotor travel ± 0.1 mm, computed and recorded in Step 2 above.

NOTE
IF THE COUPLING BOLT HOLES DO NOT LINE UP WHEN THE ADJUSTING NUT (69) HAS BEEN BACKED-OFF THE DESIRED DISTANCE FROM THE MOTOR HALF MAIN COUPLING, CONTINUE TURNING THE ADJUSTING NUT COUNTER CLOCKWISE TO REACH THE NEAREST BOLT HOLE.

CHECK DRIVER ROTATION

THE DRIVER TO MOTOR SUPPORT (172) FLANGE BOLTING MUST BE INSTALLED BEFORE MOMENTARILY ENERGIZING THE DRIVER TO CHECK DIRECTION OF ROTATION.

SEE ROTATING DIRECTIONS INDICATED BY ARROWS (→) ON THE PUMP/DRIVER ROTATION PLATES.

WARNING

THE DRIVER MUST BE CHECKED BEFORE MAKING UP COUPLING. ENSURE PUMP AND DRIVER ROTATION COINCIDE BEFORE START UP, SINCE DAMAGE TO THE EQUIPMENT AND PERSONAL INJURY COULD RESULT FROM OPERATING THE UNIT WITH WRONG ROTATION.

STEP 5

Install the pump coupling bolting and the coupling nuts. When tightening bolting, tighten alternate bolts and apply only a portion of the final torque so that all bolting is tightened evenly until the final torque value is obtained.

NOTE

AS THE COUPLING BOLTING IS TIGHTENED, DETERMINE THAT THE PUMP ROTOR IS RAISED ONE HALF OF THE TOTAL VERTICAL TRAVEL BY USE OF THE DIAL INDICATOR LOCATED AT THE PUMP HALF COUPLING LOWER HUB FACE.

8 RUNNING CLEARANCES

NOTE: Dimensions are in millimeters

PART NO.	DESCRIPTION	MAX	MIN	DESCRIPTION	PART NO.
3A	1ST STAGE IMPELLER WEAR RING	0.4	0.3	SUCTION BELL RING	6A
3B	2ND STAGE IMPELLER WEAR RING	0.4	0.3	2ND STAGE CASING RING	6B
3B	3RD STAGE IMPELLER WEAR RING	0.4	0.3	3RD STAGE CASING RING	6B
3B	4TH STAGE IMPELLER WEAR RING	0.4	0.3	4TH STAGE CASING RING	6B
135A	SUCTION BELL SLEEVE	0.46	0.4	SUCTION BELL BEARING	227A
135B	CASING SLEEVE	0.46	0.4	CASING BEARING	227B
135B	COLUMN SLEEVE	0.46	0.4	COLUMN BEARING	227B
135C	STUFFING BOX SLEEVE	0.46	0.4	STUFFING BOX BEARING	227C

9 TORQUE VALUES

NOTE

THE TORQUE VALUES GIVEN HAVE BEEN SELECTED TO ENSURE THE CORRECT PRE STRESS LEVELS OF THE THREADED FASTENERS. PERIODIC MAINTENANCE CHECKS SHOULD BE MADE TO ENSURE BOLTING TORQUES ARE MAINTAINED TO THE RECOMMENDED VALUES.

LOCATION		m x N
1	Suction Bell (360) to First Stage Casing (1A) M22	625
2	First Stage Casing (1A) to Second Stage Casing (1A) M22	625
3	Second Stage Casing (1A) to Third Stage Casing (1A) M22	625
3	Third Stage Casing (1A) to Last Stage Casing (1B) (1A) M22	625
4	Last Stage Casing (1B) to Column (423) M22	625
5	Discharge Head (361) to Column (423) M22	625
6	Discharge Head (361) to Caisson Shell (359) M27	1170
7	Stuffing Box Extension (264) to Discharge Head (361) M16	235
8	Bearing Housing (159) to Discharge Head (361) M16	235
9	Motor support (172) to Discharge Head (361) M24	830
10	Motor to Motor Support (172) M20	460
11	Split Ring (312) to Impeller M10	70
12	Caisson Shell (359) to soleplate (471) M24	830

3 COMMISSIONING

TABLE OF CONTENTS

1 INITIAL START-UP CHECKS

The following steps must be followed at initial start-up:

1 Prior to installing the pump, flush the suction side of the system to remove all deposits (slag, bolts, etc)

2 Ensure the pump and all piping is clean. Before putting the pump into operation, the piping should be thoroughly back flushed to remove any foreign matter, which may have accumulated during installation. Take all possible care not to contaminate your system.

3 Determine that the suction strainer has been installed.

4 Turn pump rotor by hand to make sure it turns smoothly.

5 Assure that proper seal piping has been installed and has not been damaged.

6 Prior to coupling installation, bump start motor to check proper rotation. If rotation is not correct refer to motor manual for proper connections to change rotation (Secure all power prior to change)

7 Ensure coupling guard is properly installed.

WARNING

THE UNIT MUST NOT BE OPERATED UNLESS COUPLING GUARD IS SECURELY AND COMLETELY BOLTED IN PLACE. FAILURE TO OBSERVE THIS WARNING COULD RESULT IN INJURY TO OPERATING PERSONNEL.

8 Check torque of all bolting and plugs for tightness. (Refer to Erection Manual)

9 Check the rotor height is correctly set. (Refer to Erection Manual)

10 Check the thrust bearing oil reservoir has been filled to the correct level and with the proper oil type. (Refer to Erection Manual).

2 OPERATING PRECAUTIONS

Clean up the unit. Check all main (suction and discharge) and auxiliary piping (mechanical seal and cooler) making sure it has been properly connected.

NOTE

Piping must be independently supported and must not be drawn into position with flange bolting.

Prepare the driver for operation as instructed by the driver manufacturer .

Be sure that the wire hand-hole covers have been installed in the "windows" of the discharge head (361) and motor support (172).

3 STARTING THE PUMP

Correct starting of the pump will assure maximum service life, whereas, incorrect starting can cause premature wear.

Step 1

Close the discharge valve if valve is not already closed, and then crack open to assure minimal flow. (Do not start unit with fully closed valve). On first starts care must be taken not to cause a system water hammer.

Step 2

Prepare the driver for start up in accordance with the driver manufacturer's instructions (See Erection Manual)

Step 3

Warm-up pump.
Avoid severe thermal shocks to the pump as a result of a sudden liquid temperature changes. The pump must be preheated prior to startup. Unless otherwise specified the external temperature of the casing must be within 38 ºC of the temperature of the liquid to be pumped at startup. Due to the heavy metal sections, the casing will lag the liquid temperature during such changes, and severe temperature stresses and subsequent misalignment of machined fits may result. Preheating is accomplished by circulating a small amount of hot fluid through the casing by utilizing vents, drains or bypass from discharge. Preheat pump slowly at a rate not to exceed 40 ºC per hour.

Step 4

Prime pump and ensure pump suction valve is open.
Before starting or while operating the pump, the casing and suction line must be completely filled with the liquid being pumped. The rotating parts depend on this liquid for lubrication and the pump may seize if operated without liquid.

Step 5

Check that pump is vented by observing leakage from casing vents and seal piping vent. Close vents when liquid is emitted.

Step 6

Double check pump rotation by starting unit momentarily. The direction of input shaft rotation is counter clockwise when facing pump shaft from coupling end. Note that the pump coasts to a gradual stop.

CAUTION

IF PUMP STOPS ABRUPTLY WHEN DRIVER IS SHUT DOWN, INVESTIGATE FOR PUMP BINDING. TAKE NECESSARY REMEDIAL ACTION BEFORE RESUMING OPERATION.

Step 7

Start the driver and bring it to speed quickly.

Step 8

As soon as pump is up to rated speed slowly open discharge valve. This will avoid abrupt changes in velocity and prevent surging in the suction line.

Step 9

Perform the operating checks

4 OPERATING CHECKS

WARNING

DO NOT ATTEMPT ANY MAINTENANCE , INSPECTION, REPAIR OR CLEANING IN THE VINICITY OF ROTATING EQUIPMENT. SUCH ACTION COULD RESULT IN INJURY TO OPERATING PERSONNEL.

Check the following as routine on start up, and at periodic intervals while operating.

A. Motor amperage and operating temperatures. Refer to Motor Instruction Manuals (See Erection Manual).

B. Pressure differential across suction strainer.

C. Suction and discharge pressure.

Suction and discharge pressure gauges should be checked to see that they indicate the proper operating conditions.

If at any time the suction/discharge gauges should drop to zero, shut down the pump immediately.
The discharge gauge should show an increase in the pressure as the pump picks up speed. If it does not, shut down the pump and locate the cause of the trouble.

D. Vibration characteristics of the suctions/discharge piping systems.

E. Capacity if flow meter is used.

CAUTION

WE DO NOT RECOMMENDED THAT THE PUMP BE OPERATED UNDER PROLONGED OR SEVERE CAVITATING CONDITIONS.

F. Freezing.

1. When the pump is exposed to freezing temperatures while not in operation, care should be taken to prevent the liquid from freezing within the pump.

If necessary the pump should be drained.

2. Take adequate measures to protect motor if exposed to freezing temperatures while not in operation (i.e., cooling coils, when used, must be drained, etc). See motor manufacturer's instructions.

5 SECURING THE PUMP

Step 1

Trip the motor circuit breaker.

NOTE

If pump stops abruptly when motor is shut down, investigate for pump binding. Take necessary remedial action before restarting pump.

Step 2

Close the pump suction, discharge, vent and drain valves in accordance with established plant procedure.

6 TROUBLE SHOOTING

This chart present the probable troubles that can occur to the pump along with the probable causes and remedies for the troubles.

TROUBLE SHOOTING CHART

FAULT	CAUSE	REMEDY
Insufficient capacity and/or pressure	Suction pressure less than required or speed too low	Open suction valve wide. Check power supply to motor for correct voltage
	Incorrect direction or rotation	Re-connect motor leads
	Excessive amount of air or vapours in the fluid.	Check suction system for air leakage and correct. Vent air. Tighten flange bolts
	Foreign material in impeller(s) and or casing diffusion vanes.	Dismantle pump and remove any foreign material.
	Foreign material in suction line.	Dismantle suction line and remove foreign material.
	Mechanical defects: Wearing ring worn, Impeller damaged, Sheared impeller keys.	Dismantle pump and correct.
Pump loses prime after starting	insufficient water supply.	Ensure that suction valves on operating pumps are wide open. Check for proper liquid level.
	Excessive amount of air or vapour in the liquid	Check suction system for air leakage and correct.
	Broken or damaged coupling	Inspect and replace same.
	Clogged impeller.	Dismantle pump and correct.
	Suction pipe clogged.	Remove foreign material.

4 OPERATION AND MAINTENANCE

TABLE OF CONTENTS

LIST OF APPLICABLE DOCUMENTS

General Arrangement Drawing	5-LCB-MDA-FPD-201
General notes to GA drawing	5-LCB-MRP-FPD-235
Cross Sectional Drawing	5-LCB-MDP-FPD-224
Pump data sheet	5-LCB-MHP-FPD-222
Pump performance curve	5-LCB-MDG-FPD-223
Piping & Instrumentation drawing	5-LCB-MDD-FPD-206
Instrument list	5-LCB-YLP-FPD-227
Spare part list	5-LCB-MLJ-FPD-104
Motor outline drawing	5-LCB-EDP-FPD-263
Motor data sheet	5-LCB-EHP-FPD-252
Motor wiring diagram	5-LCB-ESK-FPD-262

1 OPERATION

1.1 POST OVERHAUL CHECKS

The following steps should be followed at initial start up and after the equipment has been overhauled:

1. Prior to installing the pump, flush the suction side of the system to remove all deposit (slag, bolts, etc).

2. Ensure the pump and all piping is clean. Before putting the pump into operation, the piping should be thoroughly back flushed to remove any foreign matter which may have accumulated during installation. Take all possible care not to contaminate your system.

3. Install suction strainer.

4. Turn pump rotor by hand to make sure it turns smoothly.

5. Assure that proper seal piping has been installed and has not been damaged.

6. Prior to coupling installation bump start motor to check proper rotation. If rotation is not correct refer to motor manual for proper connections to change rotation (Secure all power prior to change).

7. Ensure coupling guard is properly installed.

WARNING

THE UNIT MUST NOT BE OPERATED UNLESS COUPLING GUARD IS SECURELY AND COMPLETELY BOLTED IN PLACE. FAILURE TO OBSERVE THIS WARNING COULD RESULT IN INJURY TO OPERATING PERSONNEL.

8. Check torque of all bolting and plugs for tightness.

9. Check the rotor height is correctly set.

10. Check the thrust bearing oil reservoir has been filled to the correct level. Refer to Erection Manual.

1.2 OPERATING CONDITIONS

Pumped Fluid	Condensate Water
Pumped Fluid Temperature	33.2 ºC
Pumped Fluid S. G.	0.9946
Flow Normal (base load)	410 m3/h
Flow Minimum	123 m3/h
Flow Design	632 m3/h
Total Differential Head	208 m (base load)
Pump Speed	1480 rpm

1.3 NORMAL START PROCEDURE

1. Close discharge valve if valve is not already closed, and then crack open to assure minimal flow. (Do not start unit with fully closed valve). On first starts care must be taken not to cause a system water hammer.

2. Prepare the driver for start up in accordance with the driver manufacturer's instructions.

3. Warm-Up Pump if necessary.

Avoid severe thermal shocks to the pump as a result of sudden liquid temperature changes. The pump must be preheated prior to startup. Unless otherwise specified the external temperature of the casing must be within 100 Degrees F (38º C) of the temperature of the liquid to be pumped at time of startup. Due to the heavy metal sections, the casing will lag the liquid temperature during such changes, and severe temperature stresses and subsequent misalignment of machined fits may result. Preheating is accomplished by circulating a small amount of hot fluid through the casing by utilizing vents, drains or bypass from discharge. Preheat pump slowly at a rate not to exceed 100 Degrees F per hour (38º C per hour).

4. Prime pump and ensure pump suction valve is open.

CAUTION

BEFORE STARTING OR WHILE OPERATING THE PUMP, THE CASING AND SUCTION LINE MUST BE COMPLETELY FILLED WITH THE LIQUID BEING PUMPED. THE ROTATING PARTS

DEPEND ON THIS LIQUID FOR LUBRICATION AND THE PUMP MAY SEIZE IF OPERATED WITHOUT LIQUID.

5. Check that pump is vented by observing leakage from casing vent and seal piping vent. Close vent when liquid is emitted.

6. Double check pump rotation by starting unit momentarily. The direction of input shaft rotation is counter clockwise when facing pump shaft from coupling end. Note that the pump coasts to a gradual stop.

CAUTION

IF PUMP STOPS ABRUPTILY WHEN DRIVER IS SHUT DOWN, INVESTIGATE FOR PUMP BINDING. TAKE NECESSARY REMEDIAL ACTION BEFORE RESUMING OPERATION.

7. Start the driver and bring it up to speed quickly

8. As soon as pump is up to rated speed slowly open discharge valve. This will avoid abrupt changes in velocity and prevent surging in the suction line.

9 . Perform the operating checks.

1.4 NORMAL SHUTDOWN PROCEDURE

1. Shut down driver.

The pump should be shut down rapidly to protect the internal wearing parts which are lubricated by the liquid being pumped.

NOTE

If pump stops abruptly when driver is shut down, investigate for pump binding. Take necessary remedial action before restarting pump.

2. Close the pump suction and discharge valve

1.5 ROUTINE CHECKS ON RUNNING AND STAND BY

WARNING

IN THE INTEREST OF OPERATOR SAFETY THE UNIT MUST NOT BE OPERATED ABOVE THE NAMEPLATE CONDITIONS. SUCH OPERATION COULD RESULT IN UNIT FAILURE CAUSING INJURY TO OPERATING PERSONNEL. CONSULT INSTRUCTION BOOK FOR PROPER OPERATION AND MAINTENANCE OF THE PUMP AND ITS SUPPORTING COMPONENTS.

CAUTION

OPERATION AT LOW FLOWS RESULTS IN PUMP HORSE POWER HEATING THE LIQUID. MECHANICAL DAMAGE MAY RESULT FROM CONTINUOUS OPERATION AT LOWER FLOWS THAN THE SPECIFIED MINIMUM CONTINUOUS STABLE FLOW.

Immediately after start up, and frequently during running make the following checks:

1. Check suction and discharge pressure gauges.

2. Check pressure gauges on each side of suction strainer.

3. Check for unusual noises.

1.6 TROUBLE SHOOTING

This chart presents the probable troubles that can occur to the pump along with the probable causes and remedies for the troubles

TROUBLE SHOOTING CHART

FAULT	CAUSE	REMEDY
Insufficient capacity and/or pressure	Suction pressure less than required or speed too low	Open suction valve wide. Check power supply to motor for correct voltage
	Incorrect direction or rotation	Re-connect motor leads
	Excessive amount of air or vapours in the fluid.	Check suction system for air leakage and correct. Vent air. Tighten flange bolts
	Foreign material in impeller(s) and or casing diffusion vanes.	Dismantle pump and remove any foreign material.
	Foreign material in suction line.	Dismantle suction line and remove foreign material.
	Mechanical defects: Wearing ring worn, Impeller damaged, Sheared impeller keys.	Dismantle pump and correct.
Pump loses prime after starting	insufficient water supply.	Ensure that suction valves on operating pumps are wide open. Check for proper liquid level.
	Excessive amount of air or vapour in the liquid	Check suction system for air leakage and correct.
	Broken or damaged coupling	Inspect and replace same.
	Clogged impeller.	Dismantle pump and correct.
	Suction pipe clogged.	Remove foreign material.
Pump vibration	Loose mounting or coupling bolts.	Tighten bolts

	Broken or damaged coupling.	Inspect and replace same.
	Air or gas in liquid.	Vent air and check suction for leaks. Tighten flange bolts.
	Misalignment.	Check alignment and correct.
	Foreign material in Impeller causing unbalance.	Dismantle pump and remove any foreign material
	Mechanical Defects: Shaft Bent. Bearings Worn.	Dismantle pump and replace part or parts causing vibration
Pump Overloads Driver	Speed too high	Check power supply for correct frequency.
	Pump bearings seize or rotating element binds	Dismantle pump and replace part or parts causing seizure, or binding.
Pump Stops abruptly	Pump binding at running fits.	Dismantle pump and correct.
Pump is noisy	Cavitation	Check that pump is primed, check for high suction temperature, increase static head, check for obstruction in suction line.
	Loose parts.	Tighten or replace defective part.
	Noise in driver	Check driver with stethoscope.
Thrust Bearing Overheats	Incorrect oil level	Fill to proper level
	Pump handling excessive flow	Do not operate pump over maximum flow

1.7 ISOLATION PROCEDURE

Close suction and discharge isolation valves.

Open and lock off motor power supply isolation switch.

1.8 DE-ISOLATION PROCEDURE

Open suction and discharge isolation valves.

Unlock and close motor power supply isolation switch.

2 ROUTINE MAINTENANCE

2.1 SAFETY PRECAUTIONS AND CLEANLINESS

1. Tagging For Inspection Or Repair

WARNING

BEFORE ATTEMPTING ANY INSPECTION OR REPAIR ON THE PUMP THE DRIVER CONTROLS MUST BE IN THE "OFF" POSITION, LOCKED AND TAGGED TO PREVENT INJURY TO PERSONNEL PERFORMING SERVICE ON THE PUMP.

2. Isolating Pump

WARNING

BEFORE ATTEMPTING TO DISASSEMBLE PUMP, PUMP MUST BE ISOLATED FROM SYSTEM, BY CLOSING SUCTION AND DISCHARGE SYSTEM VALVES, DRAINED OF LIQUID AND COOLED, IF PUMP IS HANDLING HOT LIQUID.

3. Draining Pump Handling Hot Liquids

WARNING

WHEN PUMP IS HANDLING "HOT" LIQUID EXTREME CARE MUST BE TAKEN TO ENSURE SAFETY OF PERSONNEL WHEN ATTEMPTING TO DRAIN PUMP. HOT PUMPS MUST BE ALLOWED TO COOL BEFORE DRAINING.

4. Cleanliness

The outer surfaces of pumps and drive motors should be kept clean at all times. This ensures the surface cooling of the motors to function correctly and any leakages to be easily spotted an traced.

2.2 ROUTINE MAINTENANCE SCHEDULE

Also refer to motor and mechanical seal manufacturers' instructions included in the Erection Manual.

ONCE PER SHIFT

Check all pipework joints for leakage.

Check the suction and discharge pressure gauge readings and motor current for any deviation from normal.

Check any abnormal noise or vibration.

DAILY

Not Applicable.

WEEKLY

Check thrust bearing oil level and refill as required

MONTHLY

If there is a stand-by pump, it should be started and put into service. The running pump should be then shut down. The two pumps should be run on a month on month off basis to even wear and ensure the stand-by pump is at all times in running condition for emergency start-up.

THREE MONTHLY

Not Applicable

SIX MONTHLY

Not Applicable

YEARLY

Drain and refill the thrust bearing reservoir with clean oil.

SCHEDULED OUTAGE

Dismantle the pump for internal examination. Renew any parts damaged or worn beyond recommended limits.

2.3 FAULT DIAGNOSIS

See trouble shooting chart given in section 1.6.

2.4 CONTROLLED TIGHTENING OF BOLTS

Bolts should be tightened using a torque wrench to the values given on table 1. These figures should not be exceeded.

2.5 GUIDANCE ON RE-USE OF MATERIALS

When running clearances exceed the recommended limits, given on Table 2, relevant wear parts should be renewed according to the overhaul instructions.

2.6 GUIDANCE ON USE OF JOINTING MATERIALS

Never re-use jointing materials such as gaskets and "O" rings. New items must be fitted.

Where sealants are used the surfaces should be carefully cleaned and new sealant of the recommended type used.

3 OVERHAUL MAINTENANCE

3.1 DISMANTLING THE PUMP

WARNING

BEFORE ATTEMPTING ANY INSPECTION OR REPAIR ON THE PUMP THE DRIVER CONTROLS MUST BE IN THE "OFF" POSITION, LOCKED AND TAGGED TO PREVENT INJURY TO PERSONNEL PERFORMING SERVICE ON THE PUMP.

WARNING

DO NOT ATTEMPT ANY MAINTENANCE, INSPECTION, REPAIR, OR CLEANING IN THE VICINITY OF ROTATING EQUIPMENT. SUCH ACTION COULD RESULT IN PERSONAL INJURY TO OPERATING PERSONNEL.

WARNING

BEFORE ATTEMPTING TO DISASSEMBLE PUMP, PUMP MUST BE ISOLATED FROM SYSTEM, BY CLOSING SUCTION AND DISCHARGE SYSTEM VALVES, DRAINED OF LIQUID AND COOLED, IF PUMP IS HANDLING HOT LIQUID.

NUMBERS SHOWN THUS (10A) ARE PART NUMBERS AND WILL BE FOUND ON SECTIONAL ASSEMBLY DRAWING.

STEP 1

Open and lock motor circuit breaker.

Disconnect electric leads.

STEP 2

Remove the guards from the "windows" in the support head (172).

Remove the bolting from the coupling and remove the flexible element.

STEP 3

Remove the motor to support head (172) bolting

STEP 4

Rig motor to an overhead hoist. Lift motor from the support head (172) and place on blocking on the floor.

Disconnect suction/discharge piping from the discharge head (361), plus any auxiliary piping which will interfere with dismantling

STEP 5

Drain the lubricating oil from the thrust bearing assembly

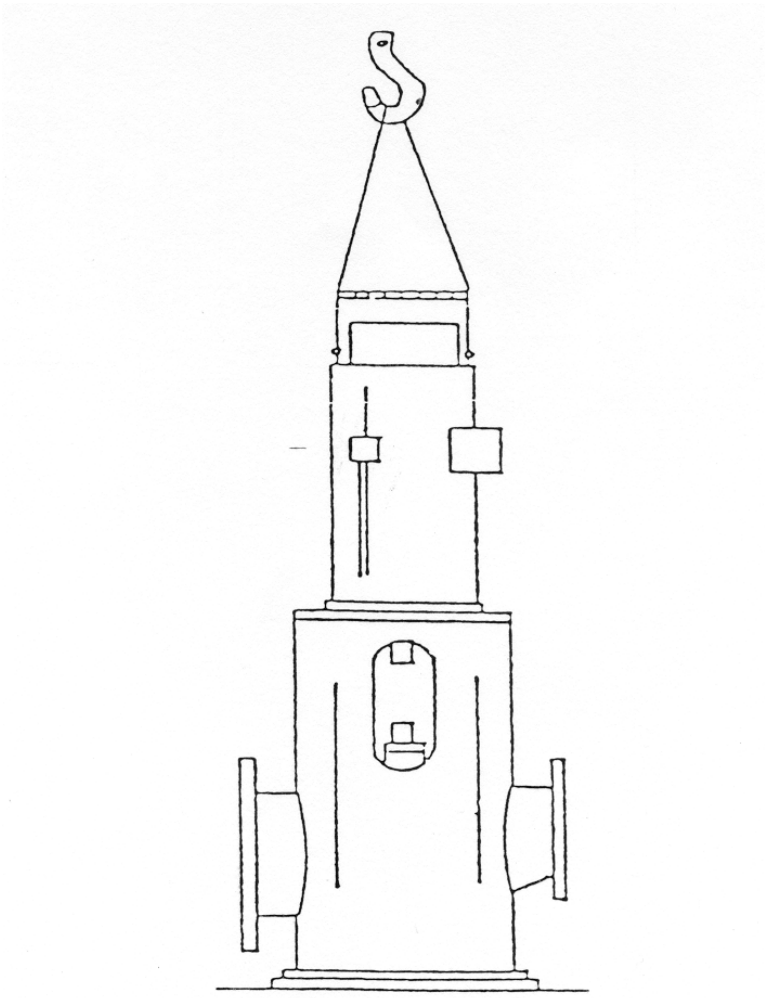

STEP 6

Remove pump half coupling and the lock nut. Loosen shaft nut (69) until the shaft reaches its lowest position and then remove it from the shaft.

STEP 7

Remove the bolts securing the motor support (172) to the discharge head (361) and lift off the support head (172).

STEP 8

Slacken and remove the thrust bearing housing bolts and lift the thrust bearing assembly complete vertically upwards using a hoist. Lift clear of the discharge head (361) upper flange, move to one side and lower onto a suitable stand.

Remove the mechanical seal box nuts and withdraw the mechanical seal (429).

STEP 9

Rig sling(s) (not provided) through "windows" in discharge head (361) as depicted in sketch at bottom of page. Remove capscrews holding discharge head (361) to caisson (359).

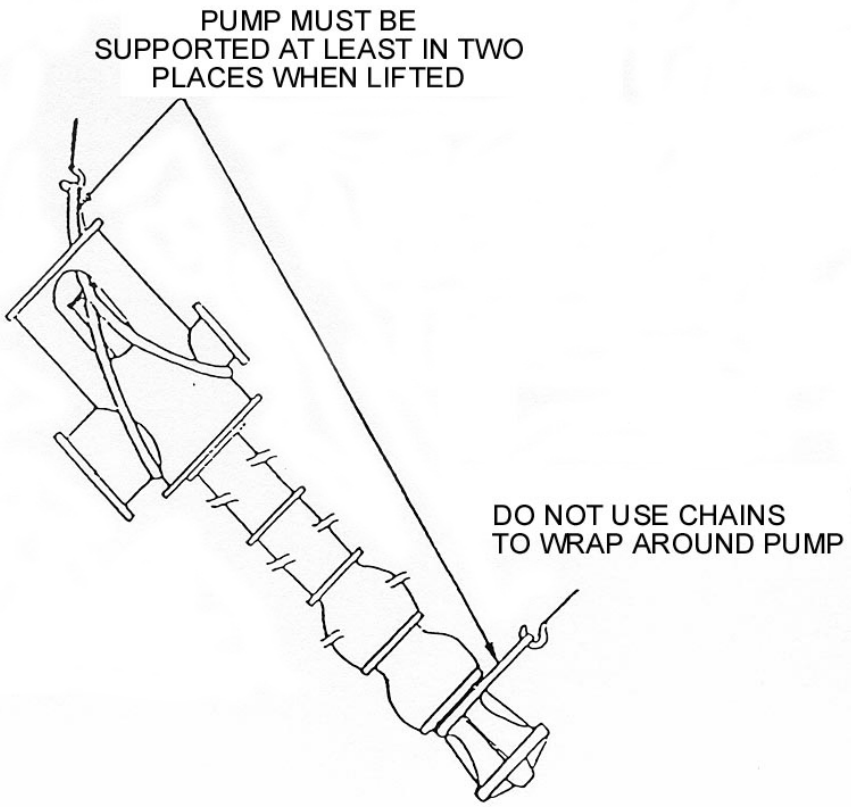

STEP 10

Using the overhead hoist, lift the entire pumping element out of the caisson (359) until the suction bell (360) is about two feet above the flange.

Rig a sling (not provided) around the first stage casing (1A) at the upper flange and to an auxiliary overhead hoist.

Using both overhead hoists, manoeuvre the pumping element Into a horizontal position and lower onto blocking on the floor. Remove the rigging from the auxiliary overhead hoist to sling and remove the sling from around the first stage casing (1A).

Do not remove rigging or sling from discharge head (361) at this time.

CAUTION

AT NO TIME SHOULD THE PULL-OUT PUMPING ELEMENT BE ROTATED IN THE SUCTION HEAD (360) OR STAGE CASINGS.

STEP 11

Position blocking under the 1st (1A), intermediate (1B) and last (1C) stage casings, and discharge head (361).

STEP 12

Remove the discharge head (361) to column (423) bolting.

STEP 13

Slide the discharge head (361) from the pump shaft-discharge head (10B) and place it in a vertical position on blocking on the floor. Support the shaft end. Remove gaskets and discard. (N.B. these gaskets are not to be re-used).

NOTE

Provide for use of slings, and/or blocking etc., to support the exposed portion of pump shaft as discharge head (361) is being removed.

NOTE

Take care when removing discharge head (361) so as not to damage mechanical seal box bearing (227D) in the process.

STEP 14

Remove mechanical seal box (264) to discharge head (361) capscrews. Rig the mechanical seal box (264) to the overhead hoist. Remove the mechanical seal box (264) and gasket (262C) from the discharge head (361).

STEP 15

Dismantle stuffing box (264) journal sleeve (135C):
Remove retaining ring (397B) from its groove in pump shaft (10B).
Remove journal sleeve (135C) and key (12B) from pump shaft (10B).

STEP 16

Remove the column (423) to last casing (1C) bolting. Slide column (423) taking care not to damage bearing (227C). Support the shaft end.

STEP 17

Dismantle column (423) journal sleeve (135B):
Remove retaining ring (397B) from its groove in pump shaft (10B).
Remove journal sleeve (135B) and key (12A) from pump shaft (10B).

STEP 18

Dismantle intermediate shaft (10B) to lower (10A) shaft coupling (449). Remove retaining ring from its groove in pump upper shaft (10A). Slide off coupling (449) and remove keys (12B) and split ring (252).

STEP 19

NOTE

The sleeve bearings (227A/B/C/D) are made from graphited carbon and are more easily damaged than metal bearings. TAKE GREAT CARE!

Place a sling round the last stage casing (1C) and remove the nuts retaining it to the third stage casing (1B). Slide the casing off the shaft taking great care not to damage the bearing. Place supports under the shaft.

NOTE

The shaft should be supported at regular intervals along its length at all times so as to prevent bending.

STEP 20

Remove circlips (397B) from shaft and withdraw the shaft bearing sleeve (135B) off the shaft.
Remove sleeve drive and retaining key (12A).

STEP 21

Remove the four socket head screws from the lock collar (312) behind the last stage impeller (3B) and remove the lock collar (312). Withdraw the impeller (3B) and key (11B).

NOTE

A little heat may need to be applied to the impeller to free it.

If heat is required to remove the impeller the following procedure should be used:

(a) Apply heat using a torch with a rosebud tip to the periphery of the impeller until it reaches a temperature of 190º C min. Use a tempilstick to confirm.

(b) Keeping the temperature between 190 to 205 ºC at the periphery apply heat to the shrouds.

(c) When the periphery and shrouds are to temperature quickly heat the hub. The impeller should be removed as soon as it becomes free.

STEP 22

Repeat procedures 19, 20 and 21 for the fourth, third, second and first stages and finally disassemble suction bell bearing sleeve (135D) in the same way.

3.2 INSPECTING AND RENEWING WORN PARTS

1. Wire brush and clean all pump parts thoroughly. Examine parts for wearing, corrosion and erosion.

Inspect suction head (360), casings (1A/B/C), suction/discharge nozzle of discharge head (361) for cracks.

2. Check the shaft on “V" blocks or rollers for total indication runout (TIR).

(a) The shaft shall be supported by two "V" blocks (rollers) near the ends of the shaft at the bearing and/or coupling areas of approximately the same diameter. The TIR of the rollers ("V" blocks) shall not exceed .025 mm. The shaft journals or journal sleeves must be round to within .025 mm at the support areas on the "V" blocks or rollers.

(b) Total indicator readings should be taken at every bearing and coupling area and/or every 300 mm between long bearing spans. Record distances from end of shaft to each TIR measurement. TIR measurements are to be taken every 90 degrees around the shaft.

(c) Maximum allowable TIR is .075 mm x total length of shaft in metres. Shafts that exceed the limit can be straightened by either cold straightening or heat straightening. Refer to IDP for heat straightening procedure.

(d) Deflected shaft shapes other than a gentle bow should be submitted to IDP for evaluation and suitability for straightening

Runouts are to be indicated with the rollers or V-blocks located at the bearing journal areas.

BELL/CASING RINGS (6A/B)

The rings should be replaced when badly grooved and/or when pump performance does not meet the system requirements.

NOTE
Be sure to re-establish original running clearances.

RINGS (6A/B) REMOVAL/INSTALLATION

The wearing rings are locked in position by headless set screws. With the wear ring in place, a small hole is drilled so that half of the hole is in the wear ring and half is in the mating piece (casing (1A/B/C) or suction head (360). the hole is then tapped and the headless set screw installed. The hole

should be deep enough to permit the set screw to go beyond the top thread or two. The top threads are lightly staked

Staking is done by use of a thin center punch and a light weight hammer. The depth of the stake should not exceed the top thread or two as its intent is to prevent the screw from ever coming out of its own accord, but not to jam the screw tight at the very bottom of its hole.

NOTE

Do not force set screw against bottom of hole as it will distort ring.

To remove the headless set screw it will become necessary to insert an allen key in the hole and carefully remove the screw. The screw has to cut through the upset threads when being removed.

STEP 1 - RING REMOVAL (6A/B)

Remove the three headless set screws and press the casing ring out of the casing or suction bell. If pressing does not easily effect removal of the ring, drill one or more holes in the face of the worn ring and split apart.

STEP 2 - INSTALLING NEW RING (6A/B)

Make sure the ring fit in the suction bell (360) or casing (1A/B/C) is free of nicks or burrs. First, shrink ring by freezing with dry ice or by use of a $C0_2$ extinguisher (chill to -18ºC Set the ring in fit, and using flat plate across ring, tap into place.

CAUTION

USE CARE WHEN USING THE MALLET SO THAT THE RING IS NOT DISTORTED

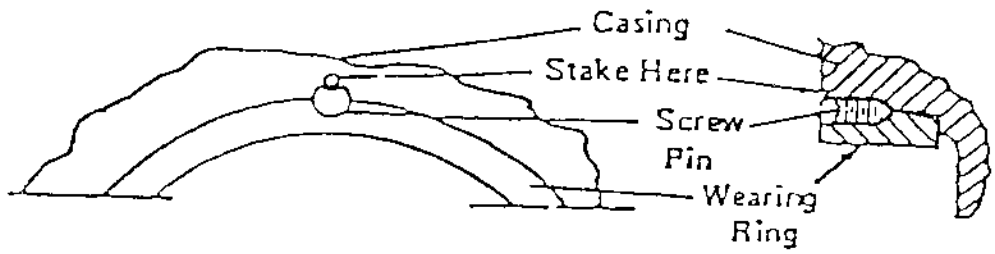

STEP 3

Drill and tap three holes for headless set screws spaced half the circular distance from the used holes. install the screws and stake. Check the dimension of casing ring I.D. versus impeller diameter plus ring clearance. Original running clearances must be re-established by machining as required.

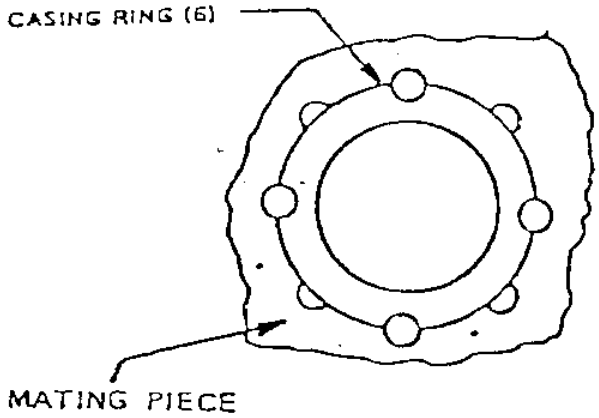

STEP 4

The bearing (227A/B) can be removed by pressing them from their respective casing (1A/B/C) or bell (360).

STEP 5

Suction head bearing (227C) can be removed by use of a cape chisel. Cut a longitudinal groove the length of the bearing and chip out pieces of the bearing until suction head (360) bore is clean.

CAUTION
DO NOT CUT INTO SUCTION HEAD

STEP 6

Once graphite bearings have been removed they cannot be re-used. New bearings must be fitted.

STEP 7

Press bearing (227D) from its respective fit in the mechanical seal box using an approved press/puller.

Carefully observe the following installation instructions when pressing the graphite bearing into its mating piece.

CAUTION
MEASURE THE LENGTH OF THE FIT AND THE BEARING TO ESTABLISH LENGTH OF PRESS.

Once the pressing operation is started, it must be continuous for full length of press.

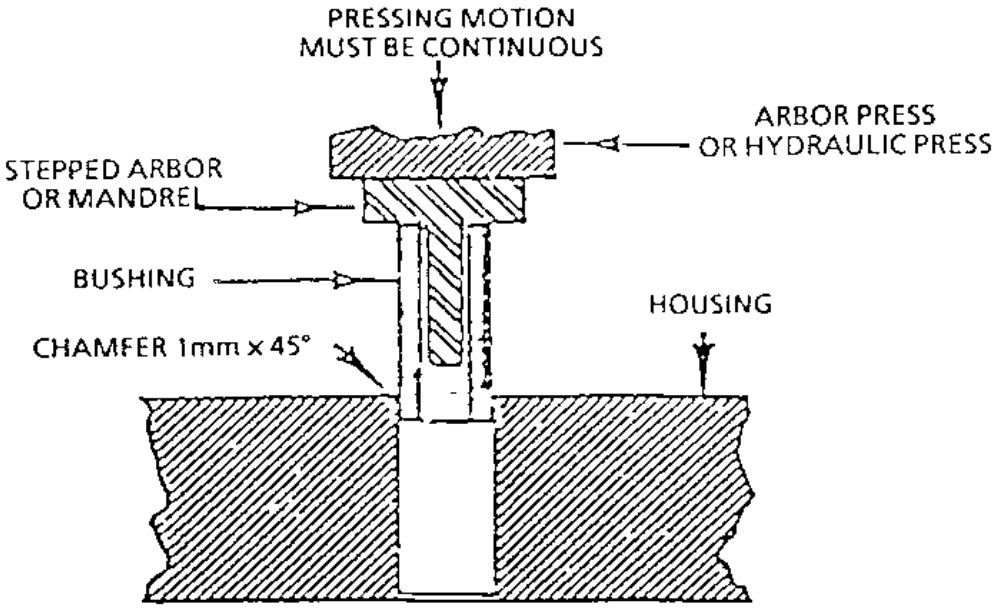

Figure 1 - Normal method of pressing graphite bushing into housing by arbor or hydraulic press.

Each graphite bushing is normally pressed into its housing by means of an arbor press or hydraulic press (Figure 1). The housing I.D. should have a chamfer of 1 mm x 45degrees to facilitate entry of the bushing. A stepped mandrel or arbor should be used to insure that the bushing will be positioned straight with the hole before installation. The small O.D. of the arbor should be 1.6 mm smaller than the I.D. of the bushing, and the large O.D. of the arbor should be larger than the O.D. of the bushing. The pressing motion must be continuous with no interruption until the bushing is completely in place

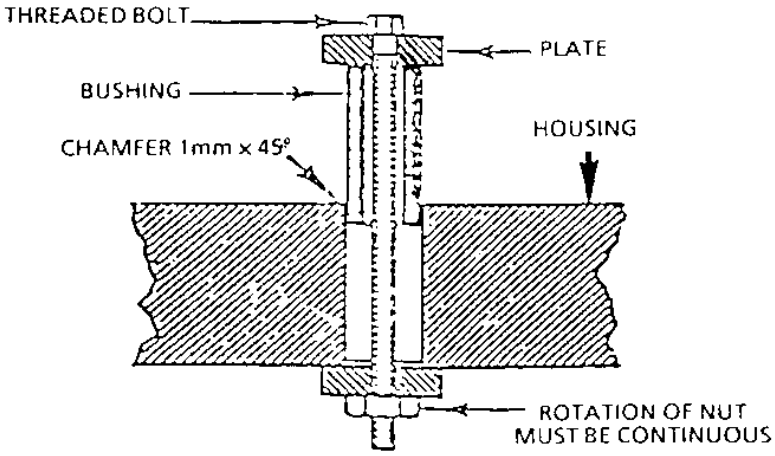

Figure 2 - Bolt-and-nut method of pressing graphite bushing into housing.

Where more practicable, the bushing may be pressed into the housing by the bolt-and-rut method; that is, with a plate against the upper end of the bushing (Figure 2). The nut must be continuously drawn up.

STEP 8

The journal sleeves (135A/B/C/D) are renewable.

STEP 9

Inspect impellers (3A/B) for blockage, cracks, grooving, or other signs of excessive wear.

Inspect suction head (361), casings (1A/B/C), suction/discharge nozzles of discharge head (361) for cracks.

STEP 10

Install new bearings per instructions outlined under Step 6/7 of "INSPECTION AND RENEWING WORN PARTS".

STEP 11

Renew all gaskets and "O" rings during reassembly procedures.

3.3 REASSEMBLY

Follow steps under paragraph 3.1 in reverse sequence.

TABLE 2 TORQUE VALUES

NOTE

THE TORQUE VALUES GIVEN HAVE BEEN SELECTED TO ENSURE THE CORRECT PRE STRESS LEVELS OF THE THREADED FASTENERS. PERIODIC MAINTENANCE CHECKS SHOULD BE MADE TO ENSURE BOLTING TORQUES ARE MAINTAINED TO THE RECOMMENDED VALUES.

LOCATION		m x N
1	Suction Bell (360) to First Stage Casing (1A) M22	625
2	First Stage Casing (1A) to Second Stage Casing (1B) M22	625
3	Second Stage Casing (1B) to Third Stage Casing (1B) M22	625
3	Third Stage Casing (1B) to Fourth Stage Casing (1B) M22	625
4	Last Stage Casing (1C) to Column (423) M22	625
5	Discharge Head (361) to Column (423) M22	625
6	Discharge Head (361) to Caisson Shell (359) M27	1170
7	Stuffing Box Extension (264) to Discharge Head (361) M16	235
8	Bearing Housing (159) to Discharge Head (361) M16	235
9	Motor support (172) to Discharge Head (361) M24	830
10	Motor to Motor Support (172) M20	460
11	Split Ring (312) to Impeller M10	70
12	Caisson Shell (359) to soleplate (471) M24	830

Pump vibration	Loose mounting or coupling bolts.	Tighten bolts
	Broken or damaged coupling.	Inspect and replace same.
	Air or gas in liquid.	Vent air and check suction for leaks. Tighten flange bolts.
	Misalignment.	Check alignment and correct.
	Foreign material in Impeller causing unbalance.	Dismantle pump and remove any foreign material
	Mechanical Defects: Shaft Bent. Bearings Worn.	Dismantle pump and replace part or parts causing vibration
Pump Overloads Driver	Speed too high	Check power supply for correct frequency.
	Pump bearings seize or rotating element binds	Dismantle pump and replace part or parts causing seizure, or binding.
Pump Stops abruptly	Pump binding at running fits.	Dismantle pump and correct.
Pump is noisy	Cavitation	Check that pump is primed, check for high suction temperature, increase static head, check for obstruction in suction line.
	Loose parts.	Tighten or replace defective part.
	Noise in driver	Check driver with stethoscope.
Thrust Bearing Overheats	Incorrect oil level	Fill to proper level
	Pump handling excessive flow	Do not operate pump over maximum flow

Refer to driver manual for driver information (See Erection Manual).

Refer to mechanical seal manual for seal information (See Erection Manual).

Pump
Drawings

Project:
LAVRION V-CCPP DMKT 11 21 302

Title: General Notes to General Arrangement Drawing
(Condensate Extraction Pumps 5LCB 10/20 AP001)

Supplier Document No:	-	Issue: 0
KKS Document No:	5-LCB-MRP-FPD-235	
Purpose of issue: For approval		Date: 27/07/04

00-Y-X-10302-F3/I Issue 1

Prepared: LQ

Reviewed: MM

Approved: VB

GENERAL NOTES TO DRAWING: 243APKD86XE57

CONDENSATE EXTRACTION PUMPS

PUMP TYPE: 243 APKD-4

CLIENT: METKA

PROJECT: LAVRION V CCPP.

TWO (2) CONDENSATE EXTRACTION PUMPS

Rev #	Date:	Comments
	26th. July 2004	First Issue

Prepared by	lq	
Revised by	Vb	
Approved by	Vb	

GENERAL NOTES ON
CONDENSATE EXTRACTION PUMPS

SUCTION PIPING

TO OBTAIN MINIMAL STRAIN TRANSMITTED TO THE PUMP WHEN THE FLANGE BOLTS ARE TIGHTENED, SUCTION PIPE SHALL BE SUPPORTED INDEPENDENTLY NEAR THE PUMP. PARTICULAR ATTENTION MUST BE GIVEN TO THE SUPPORTING OF VALVES AND FITTINGS.

IT IS RECOMMENDED THAT THE SUCTION PIPE BE ADEQUATELY SUPPORTED AND/OR DAMPENED TO AVOID EXCESSIVE PIPING VIBRATION. (NATURAL FREQUENCY OF THE PIPE SHALL BE REMOVED FROM THE ONE OF THE PUMP BY A MINIMUM OF 25%).

EXPANSION JOINTS, WHEN USED, SHALL BE PROVIDED WITH AN AXIAL RIGID CONNECTION SUCH AS TIE ROD.

SUCTION PIPE SHOULD BE AS DIRECT AND SHORT AS POSSIBLE, WITH AS FEW BENDS OR TURNS AS POSSIBLE. BENDS, IF UNAVOIDABLE, SHOULD BE MADE WITH A LONG RADIUS.

ALL FITTINGS (ELBOWS, VALVES, ETC) SHOULD BE LOCATED AS LOW WITHIN THE SUCTION LINE AS POSSIBLE, THUS AVOIDING "VAPOR" FLASHING AS A RESULT OF FRICTION AND VELOCITY LOSSES.

HORIZONTAL RUNS OF SUCTION PIPE SHALL HAVE A GRADUAL SLOPE. ANY HIGH POINT IN THE LINE WILL ACCUMULATE AIR AND THUS PREVENT PROPER PUMP OPERATION. WHERE AIR POCKETS CANNOT BE AVOIDED, CONTINUOUS VENTING IS REQUIRED.

SUCTION PIPE SHOULD BE EQUAL OR LARGER THAN THE PUMP SUCTION NOZZLE.

DISCHARGE PIPING

TO OBTAIN MINIMAL STRAIN TRANSMITTED TO THE PUMP WHEN THE FLANGE BOLTS ARE TIGHTENED, SUCTION PIPE SHALL BE SUPPORTED INDEPENDENTLY NEAR THE PUMP. PARTICULAR ATTENTION MUST BE GIVEN TO INDEPENDENTLY SUPPORT CHECK AND GATE VALVES.

IT IS RECOMMENDED THAT THE SUCTION PIPE BE ADEQUATELY SUPPORTED AND/OR DAMPENED TO AVOID EXCESSIVE PIPING VIBRATION. (NATURAL FREQUENCY OF THE PIPE SHALL BE REMOVED FROM THE ONE OF THE PUMP BY A MINIMUM OF 25%).

SHALL HAVE THE CHECK AND DRAIN VALVES LOCATED BELOW THE STATIC WATER ELEVATION OF THE SYSTEM TO ENSURE ADEQUATE VENTING (CAREFULLY PRIMED SYSTEM) PRIOR TO PUMP START-UP. ALL HIGH POINTS SHALL BE VENTED.

DISCHARGE PIPE SHALL BE PROVIDED WITH AN ADEQUATE FLOW BY-PASS SYSTEM TO AVOID INDIVIDUAL PUMP OPERATION BELOW THE SPECIFIED MINIMUM FLOW 123 m^3/h. THE BY-PASS SYSTEM SHALL HAVE PROVISIONS TO VENT AIR FROM ALL HIGH POINTS.

MINIMUM FLOW

ALL PUMPS REQUIRE A MINIMUM FLOW TO REMOVE THE HEAT ENERGY ENCOUNTERED UNDER LOW FLOW AND THUS LOW EFFICIENCY CONDITIONS.

EACH PUMP MUST BE ASSURED A MINIMUM FLOW OF **123 m^3/h** .

THERE ARE TWO BASIC TYPES OF MINIMUM FLOW SYSTEMS EMPLOYED.

THE COMMON SYSTEM.

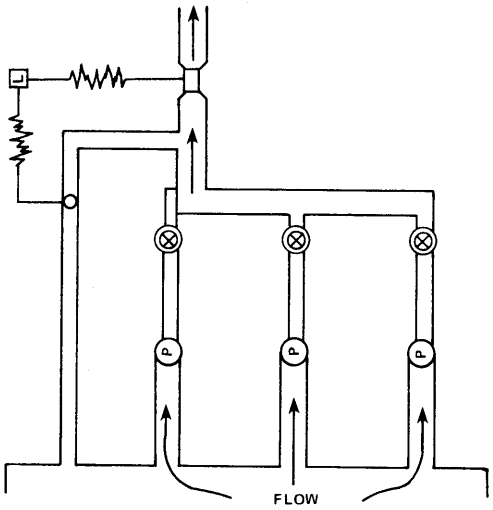

P: PUMP
L: LOGIC INTERLOCK WHICH SENSES AND CONTROLS FLOW

IT USES ONE PIPE, ONE FLOW METER, AND ONE CONTROL VALVE FOR ALL OF THE PUMPS WITHIN THE SYSTEM.

AS A PROTECTIVE SYSTEM IT MUST PROVIDE ADEQUATE PROTECTION FOR EACH OF THE PUMPS.

THE DISADVANTAGE OF A COMMON SYSTEM IS THAT WHEN PROTECTION FOR ONE PUMP IS LOST, PROTECTION FOR ALL PUMPS IS LOST.

THE INDIVIDUAL SYSTEM

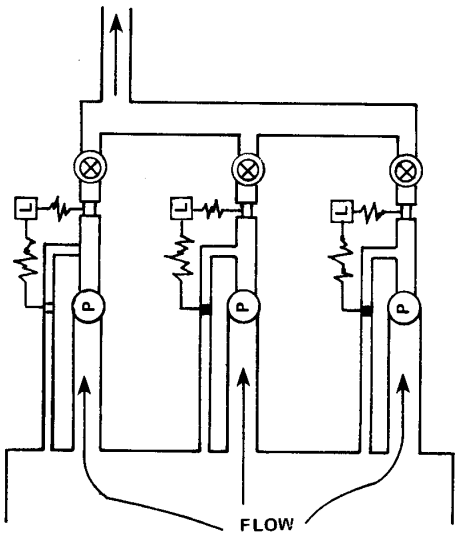

THIS SYSTEM WOULD REQUIRE A PIPE, FLOWMETER AND CONTROL VALVE FOR EACH PUMP

AS WELL AS BEING MORE RELIABLE THIS TYPE OF SYSTEM IS MORE EFFICIENT IN THAT AS EACH PUMP IS SHUT DOWN, THE PROTECTION FLOW IS REDUCED.

CONSTRUCTION STRESS

MANY TIMES PUMPS ARE INSTALLED WHILE MUCH OF THE SUCTION AND DISCHARGE PIPING IS UNDER CONSTRUCTION. EVEN USING THE PUMP AS A HOLDING FIXTURE. IF THIS IS TO BE THE CASE, IT IS STRONGLY RECOMMENDED THAT THE DISCHARGE HEAD BE REMOVED FROM THE PUMPING ELEMENT AND BE INSTALLED ON THE SHELL WHILE THE ELEMENT ITSELF REMAINS IN STORAGE. THERE ARE THREE REASONS FOR THIS:

1. THE PUMPING ELEMENT WILL NOT BE SUBJECTED TO UNDUE STRESS OR EXPOSURE TO STAGNANT WATER.
2. THE DISCHARGE HEAD CAN BE INSPECTED FOR DISTRESS AS A RESULT OF PIPING INSTALLATION TECHNIQUES.
3. IT WOULD BE NATURAL TO INSPECT AND CLEAN THE SHELL OF FOREIGN OBJECTS AS SUBJECT TO UNDER PIPING INSTALLATION TECHNIQUES.

MULTIPLE CONDENSATE SEALING SYSTEM

PREVENTS AIR ENTERING IDLE SEAL AT LOW SUCTION PRESSURES

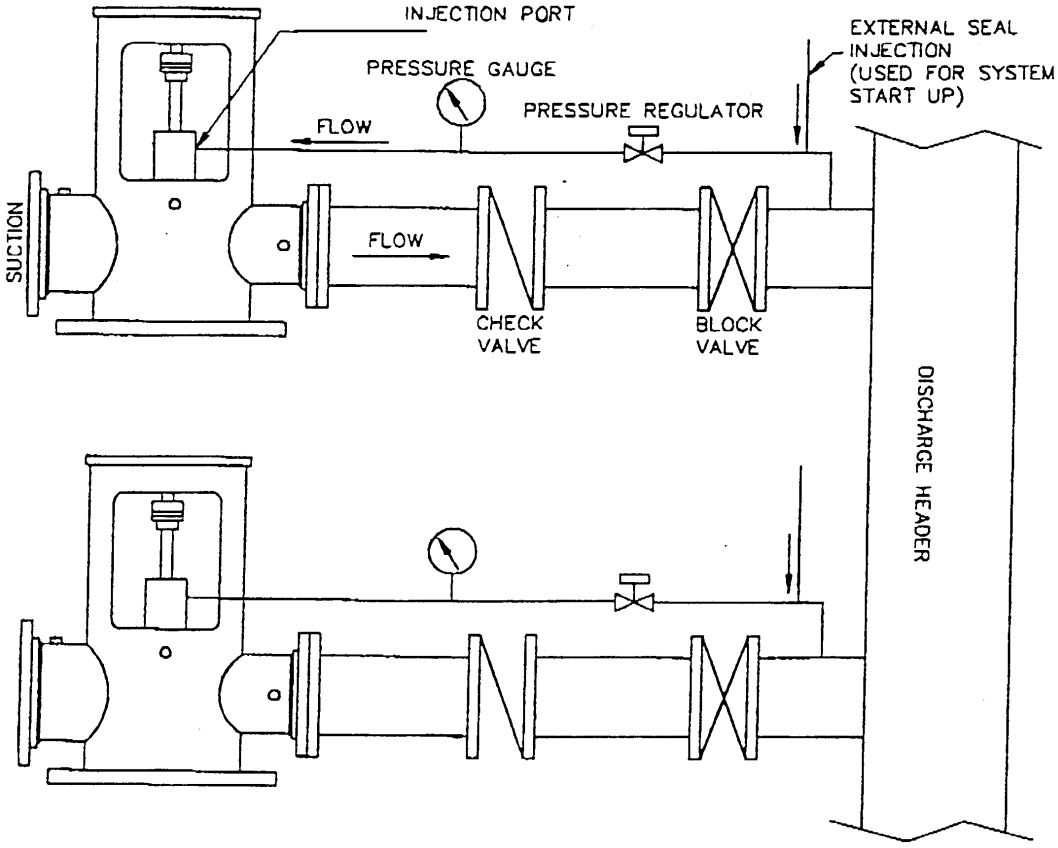

ALL PIPING SHOWN IS TO BE SUPPLIED BY THE CUSTOMER.

WATER INJECTION AT 10 TO 15 PSIG AND UP TO 2 GPM IS REQUIRED TO PROVIDE SEALING IN THE STUFFING BOX OR MECHANICAL SEAL OF THE IDLE PUMP WHEN THE UNIT IS UNDER VACUUM.

A PRESSURE REGULATOR SHOULD BE INSTALLED TO MAINTAIN ADEQUATE PRESSURE TO THE SEAL. ALSO, A PRESSURE GAUGE SHOULD BE INSTALLED DOWNSTREAM OF THE PRESSURE REGULATOR TO MONITOR INJECTION WATER PRESSURE.

START-UP

SUCTION STRAINER

CONDENSATE PUMPS STRAINERS TEND TO PLUG AND INTRODUCE A HEAD LOSS VERY QUICKLY SINCE THEY ARE VERY CLOSE TO THE CONDENSER HOTWELL WHICH IS THE ORIGIN OF MOST THE DEBRIS. DUE TO THE LITTLE NET POSITIVE SUCTION HEAD AVAILABLE (NPSHA) MARGIN, THE LOSSES ACROSS A PLUGGED SRAINER CAN CAUSE THE PUMP TO CAVITATE.

BASED UPON FLOWSERVE EXPERIENCE, MOST CONDENSATE PUMP WILL SE DEBRIS DURING THE FLUSHING OPERATION AS OPPOSED TO FINE SUSPENDED SOLIDS. FOR THAT REASON, A TRADITIONAL COARSE STRAINER OF 1/16” PERFORATION SIZE IS WHAT IS RECOMMENDED DURING THE INITIAL FLUSH OR WHENEVER THE HOTWELL HAS BEEN OPENED UP FOR MAINTENANCE. THE STRAINER SHOULD HAVE DELTA PRESSURE CONNECTIONS TO MONITOR THE HEAD LOSS DURING THE FLUSHING OPERATION AND INSURE A POSITIVE PRESSURE AT THE

CONDENSATE PUMP FLANGE. AFTER THE SYSTEM FLUSHING, THE CONICAL STRAINER SHOUDL BE REMOVED.

AN ALARM SHALL BE SET AT 1 FT FOR THE DIFFERENTIAL PRESSURE ACROSS THE STRAINER.

ALKALIN FLUSH

WHILE IT IS ADVANTAGEOUS TO THE SYSTEM TO PERFORM A "HOT" OR ALKALIN FLUSH, CONDENSATE PUMPS WITH BRONZE COMPONENTS WILL SUFFER DAMAGE IF THE SOLUTION IS ALLOWED TO ATTACK THE PUMP FOR EXTENDED PERIODS OF TIME. THEREFORE, THE FOLLOWING PROCEDURE SHOULD BE FOLLOWED DURING THE FLUSH OPERATIONS:

1. A MINIMUM NUMBER OF PUMPS SHOULD BE OPERATED DURING THE FLUSH. ALL OTHER PUMPS BEING ISOLATED OR NOT INSTALLED.
2. ALKALIN FLUSHING SHOULD BE LIMITED TO A SINGULAR TWO HOURS PERIOD AND DIRECTLY FOLLOWED BY A FRESH WATER FLUSH UNTIL THE PH IN ALL PUMPS IS NEUTRAL.

DRAWING NO. 243APKD-XE07 REV. C

REVISIONS							
REV.	DESCRIPTION	ECO No	DATE	REF. ZONE	REV'D	CHKD	APPV'D
A	1st REVISED		27.4.04		VPG	PPP	NMT
B	2nd REVISED		6.11.04		VPG	PPP	NMT
C	3rd REVISED		5.11.04		VPG	PPP	NMT

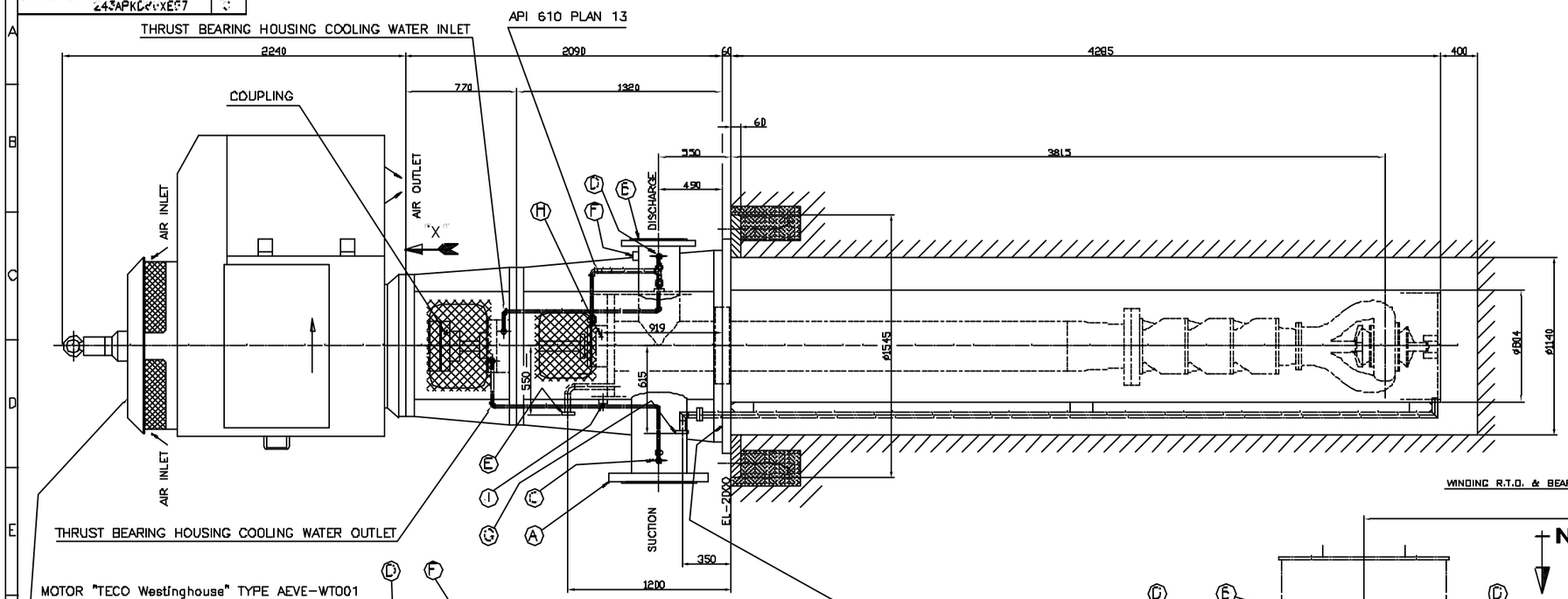

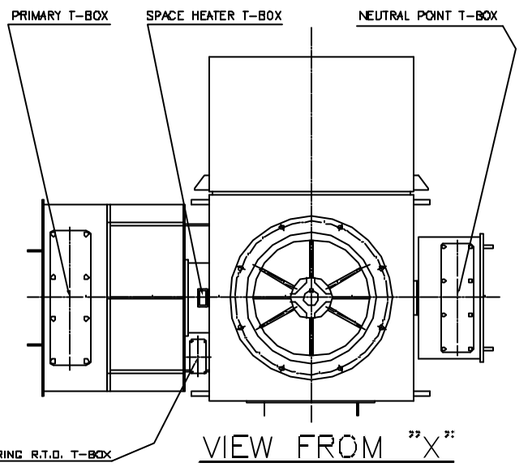

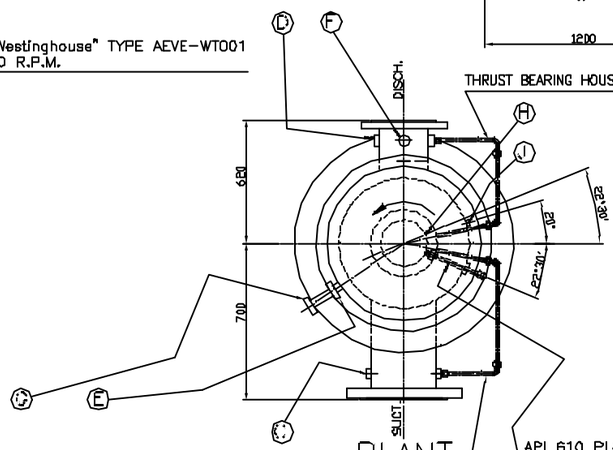

PLANT

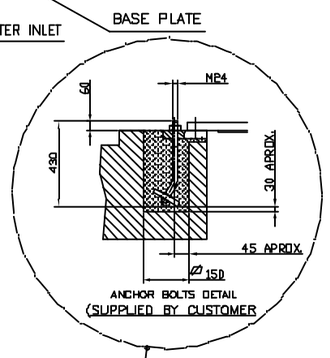

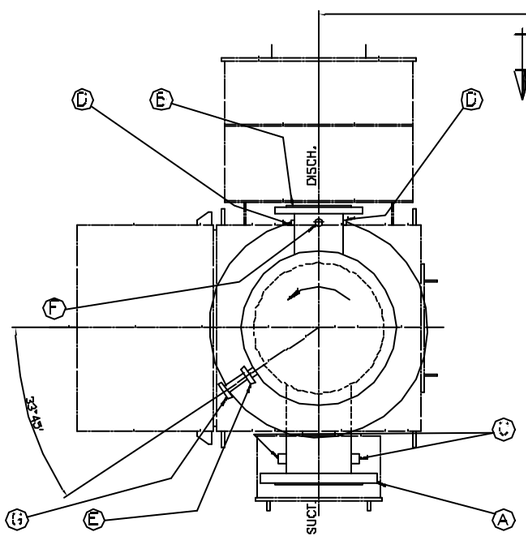

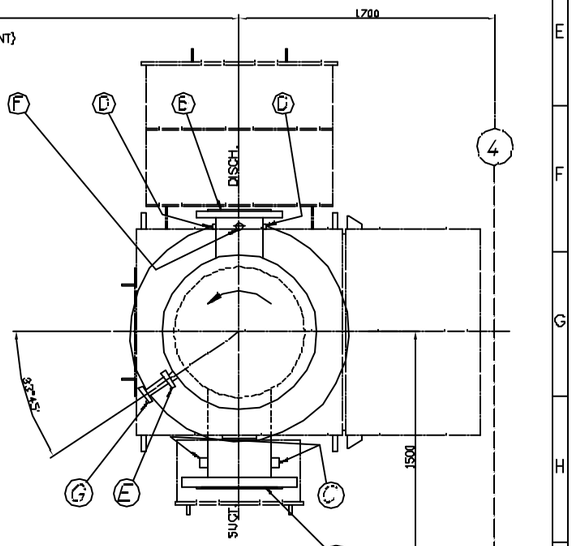

MAXIMUM FOUNDATION NOZZLE LOADS & MOMENTS

FLANGES		SUCT. 20"	DISCH.. 12"
LOADS (N)	Fx	8200	6670
	Fy	8200	8000
	Fz	8200	5340
	Fr	14202	11700
MOMENTS (Nm)	Mx	3400	6100
	My	3400	2980
	Mz	3400	4610
	Mr	5889	8210

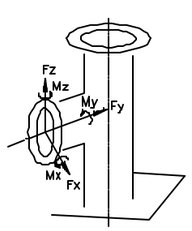

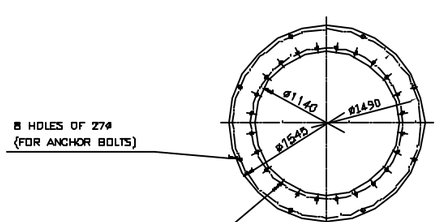

PLANT BASE PLATE

CUSTOMER CONNECTION		
A	SUCTION	FLANGE ANSI 20" 150# RF
E	DISCHARGE	FLANGE ANSI 12" 300# RF
G	GAGE PRESSURE CONNECTION SUCTION	3/4"NPT (PLUGGED)
D	GAGE PRESSURE CONNECTION DISCHARGE	3/4"NPT (PLUGGED)
E	VENT	FLANGE ANSI 2" 150# RF
F	VENT DISCHARGE	1"NPT (PLUGGED)
G	CAN VACUUM	BLIND FLANGE 2" 150# RF
H	MECHANICAL SEAL EXTERNAL INJECTION (STAND-BY)	1/2"NPT (PLUGGED)
J	SEAL DRAIN TRAY	1/2"NPT (PLUGGED)

TOLERANCES

ALLOW ±10 mm. FOR FLANGES LOCATION

±1% FOR ALL NOMINAL LINEAR DIMENSIONS

APPROX. WEIGHTS

PUMP	3150 Kg.
MOTOR	3800 Kg.
TOTAL	6950 Kg.

APPROVAL NOTE TO CUSTOMER

PROPRIETARY NOTE

PUBLIC POWER CORPORATION — LAVRION V CC PP — DWKT 11 21 302

METKA

GENERAL ARRANGEMENT
CONDENSATE EXTRACTION PUMPS
243APKD-4

METKA DWG.No. — DIN A1
KKS DWG.No. 5LCB MDAFPD201 — SCALE NTS
EA DWG.No. — SHEET OF

CUSTOMER INFORMATION	OPERATING CONDITIONS
P.O. NUMBER: L01 A-4526/AT/at	FLOW: 832 m3/h
END USER: PPC	HEAD: 187 m.
JOB: LAVRION	BHP: 414 Kw.
PLANT: LAVRION CCPP	EFFICIENCY: 77.5%
UNIT: 2	RPM: 1480
SERVICE: CONDENSATE EXTRACTION	FLUID: CONDENSATE
ITEM: 5LCB 10120AP001	TEMPERATURE: 28.4°C.
SERIAL No.: M-148485 AND M-148484	S.G.: 0.9970

1st Angle Projection

STATUS OF APPROVAL

ORDER No.

DRAWN BY	V.Pafilis	DATE 23.7.2004
CHECKED BY	P.Papatzos	DATE 23.7.2004
APPROVED BY	M.Metrofis	DATE 23.7.2004

ROMBERG — Pump Division, Coaldale Operations

DWG TITLE: GENERAL ARRANGEMENT
CONDENSATE EXTRACTION PUMPS
243APKD-4

SIZE A1 — DRAWING NO. 243APKD-XE07 — REV. C

FILE CAD: W1G2261

SCALE NTS — UNITS — SHEET NO. n/p

Project:

LAVRION V-CCPP
DMKT 11 21 302

Title: P&ID

(Condensate Extraction Pumps 5LCB 10/20 AP001)

Supplier Document No:	-	Issue: C
KKS Document No:	5-LCB-MDD-FPD-206	
Purpose of issue: For Revision		Date: 16/02/05

00-Y-X-10302-F3/I Issue 1

Prepared: NO

Reviewed: MAP

Approved: MM

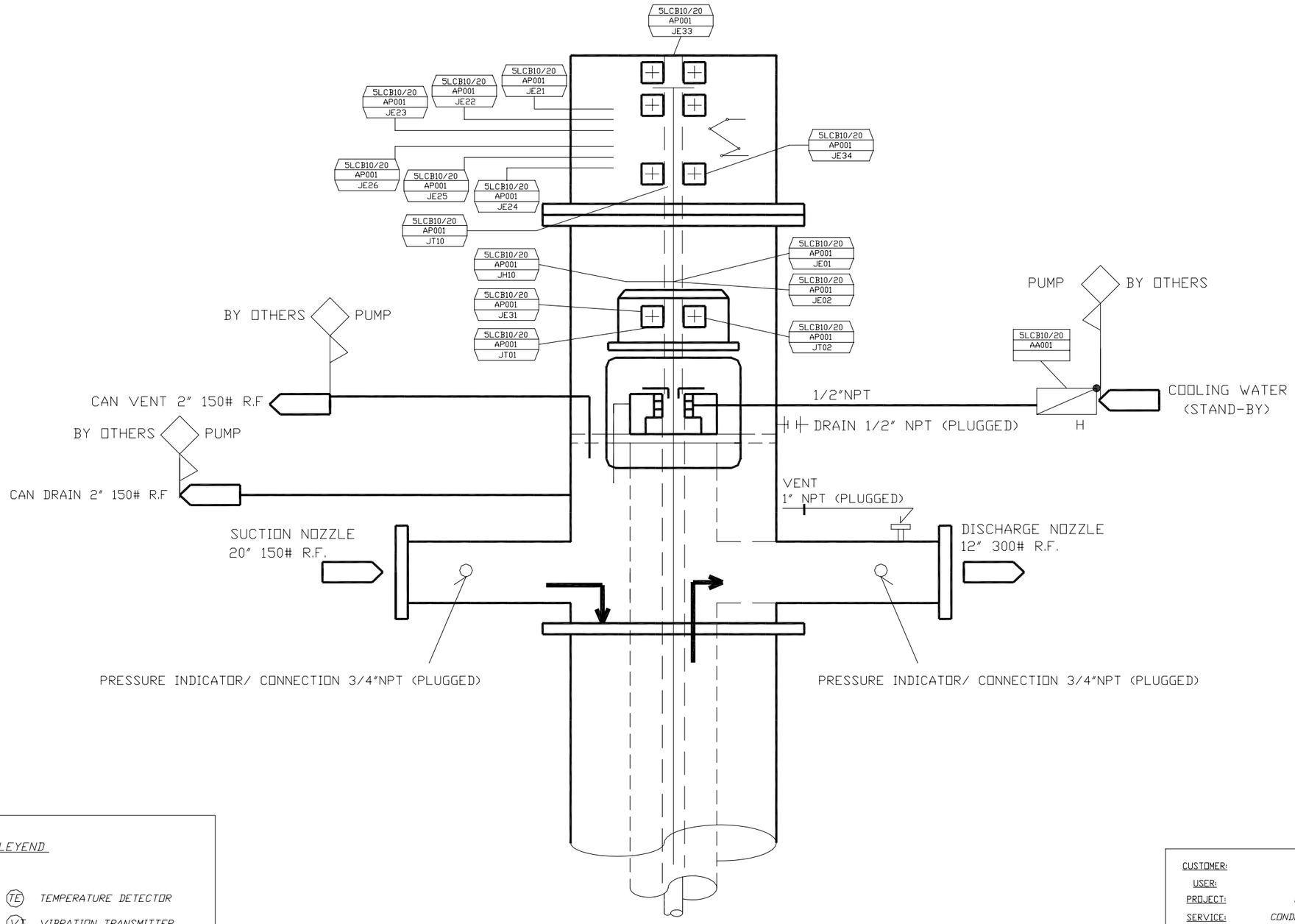

LEYEND

- TE — TEMPERATURE DETECTOR
- VT — VIBRATION TRANSMITTER
- CV — CONTROL VALVE

NOTE: * To identify every signal please see Pump Instrument List 5-LCB-YLP-FPD-227 & Pump Valve List 5-LCB-MLP-FPD-226 Motor Instrument List 5-LCB-YLP-FPD-256*

CUSTOMER:	METKA
USER:	PPC
PROJECT:	LAVRION V
SERVICE:	CONDENSATE PUMPS
PUMP:	243APKD-4
TAG No.:	5LCB10/20AP001

REV.	MODIFICATION	DATE	DRW.	CHK.	APPR.
C	GENERAL ISSUE	12.01.05	N.O	M.A.P	M.M.
B	GENERAL ISSUE	3.11.04	N.O	M.A.P	M.M.
A	GENERAL ISSUE	23.07.04	N.O	M.A.P	M.M.
0	FIRST ISSUE	31.03.04	N.O	M.A.P	M.M.

CAD DRAWING - MANUAL MODIFICATIONS ARE NOT ALLOWED -

FLOWSERVE — PUMP DIVISION, COSLADA PLANT, MADRID

DERIVED FROM : –
CERTIFIED FOR :

DRAWN : N.O.Z	DATE : 31.03.04	TITLE : PIPING & INSTRUMENTATION DIAGRAM	
CHECKED : M.A.P	DATE : 31.03.04		
APPROVED : M.M.	DATE : 31.03.04	CAD.REF. X101843	DRAWING N. –
SCALE :	WEIGHT :		C

MARCA	CANT. UNIT.	DESIGNACION	MATERIAL	MARCA	CANT. UNIT.	DESIGNACION	MATERIAL	MARCA	CANT. UNIT.	DESIGNACION	MATERIAL	MARCA	CANT. UNIT.	DESIGNACION	MATERIAL
1A	1	CASING FIRST STAGE	A48 GR.30B	103	1	ALIGNING RING	EN10025/S275JR	262B	1	GASKET	KLINGER SIL C4400	456A	2	O'RING	BUNA-N
1B	2	CASING INTERMEDIATE	A48 GR.30B	126	1	IMPELLER NUT	A276 T410 CONDJ 262 HBN MAX.	262C	1	GASKET	KLINGER SIL C4400	456B	1	O'RING	BUNA-N
1C	1	CASING LAST STAGE	A48 GR.30B	135A	1	SHAFT SLEEVE	A276 T410 T y R. 352-415 HBN	263	1	AXIAL BEARING 29332E	–	456C	1	O'RING	BUNA-N
3A	1	IMPELLER FIRST STAGE	A487/A487N CA6NM-A	135B	1	SHAFT SLEEVE	A276 T410 T y R. 352-415 HBN	264	1	MECHANICAL SEAL BOX	A108 GR.10450	456D	3	O'RING	BUNA-N
3B	3	IMPELLER INTERMEDIATE	A487/A487N CA6NM-A	135C	1	SHAFT SLEEVE	A276 T410 T y R. 352-415 HBN	291	6	SLEEVE KEY	AISI-410 ESTIRADO EN FRIO	456E	2	O'RING	BUNA-N
6A	2	IMPELLER RING FIRST STAGE	A582 T416 T. y R. 352-415 HBN	135D	4	SHAFT SLEEVE	A276 T410 T y R. 352-415 HBN	291A	1	SLEEVE KEY MECHANICAL SEAL BOX	AISI-410	456F	1	O'RING	BUNA-N
6B	3	IMPELLER RING INTERMEDIATE STAGE	A582 T416 T. y R. 352-415 HBN	159	1	BEARING HOUSING	A360B (A36B)	312	3	SPLIT THRUST RING	A276 T410 CONDA	456G	1	O'RING	BUNA-N
10A	1	LOWER SHAFT	A276 T410 CONDJT 262 HBN MAX.	180	1	COVER BEARING HOUSING	A360B (A36B)	359	1	SHROUD	EN10025/S275JR	471	1	BASEPLATE	EN10025/S275JR
10B	1	INTERMEDIATE SHAFT	A276 T410 CONDJT 262 HBN MAX.	172	1	MOTOR SUPPORT	EN10025/S275JR	360	1	SUCTION BELL	A48 GR.30B				
11A	1	IMPELLER KEY FIRST STAGE	AISI-410 ESTIRADO EN FRIO	205	1	BALL BEARING 6232-C3	–	361	1	DISCHARGE HEAD	EN10025/S275JR				
11B	3	IMPELLER KEY INTERMEDIATE STAGE	AISI-410 ESTIRADO EN FRIO	227A	2	BEARING	CARBON EK-24	397A	2	RETAINING RING	AISI-302				
12A	2	SHAFT COUPLING KEY	AISI-410 ESTIRADO EN FRIO	227B	1	BEARING	CARBON EK-24	397B	11	RETAINING RING	AISI-302				
12B	1	COUPLING KEY	AISI-410 ESTIRADO EN FRIO	227C	4	BEARING	CARBON EK-24	423A	1	LOWER COLUMN PIPE	EN10025/S275JR				
54	1	THRUST SLEEVE KEY	AISI-410 ESTIRADO EN FRIO	227D	1	BEARING	CARBON EK-24	423B	1	INTERMEDIATE PIECE	EN10025/S275JR				
69	1	REGULATION NUT	F-114D	252	1	SPLIT RING	A276 T410 CONDJ 262 HBN MAX.	429	1	MECHANICAL SEAL	–				
88	7	SEAL BOX BUSHING	A582 T416 CONDJT 262-302 HBN	262A	1	GASKET	KLINGER SIL C4400	449	1	SHAFT COUPLING	A276 T410 CONDJT 262 HBN MAX.				

MECHANICAL SEAL PIPING PLAN 13			
POS.	QTY.	DESIGNATION	MATERIAL
1	2	UNION NUT 1/2"NPT	A276 S31600
2	1	PIPE 1/2" NPT x80 LONG.	A276 S31600
3	2	ELBOW 90° 1/2"NPT	A276 S31600
4	1	PIPE 1/2" SCH.40 x 1000 LONG.	A276 S31600
5	1	COLLAR 1/2" NPT	A276 S31600
6	1	DRIFICE 1/2" NPT	A276 S31600

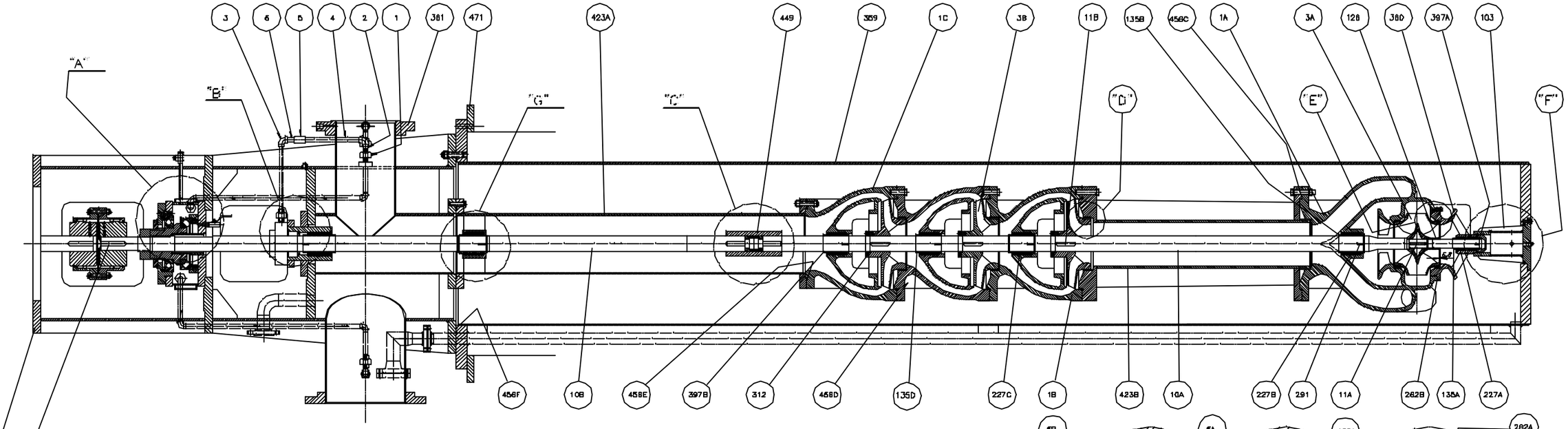

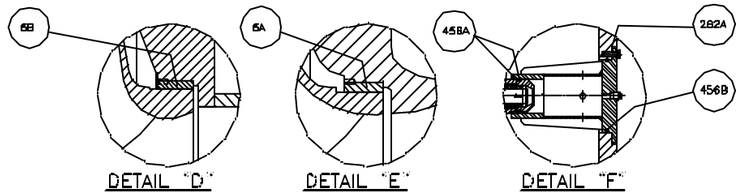

DETAIL "D" DETAIL "E" DETAIL "F"

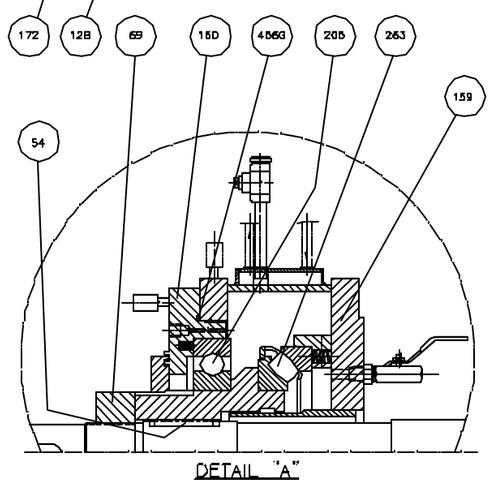

DETAIL "A"

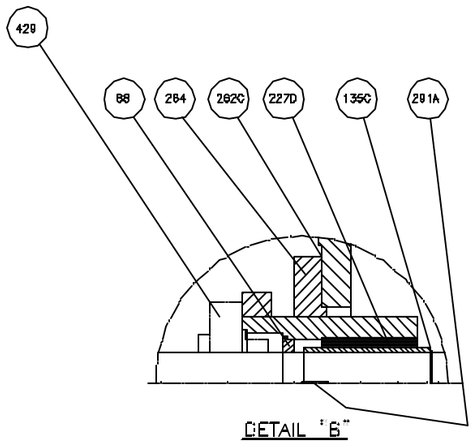

DETAIL "B"

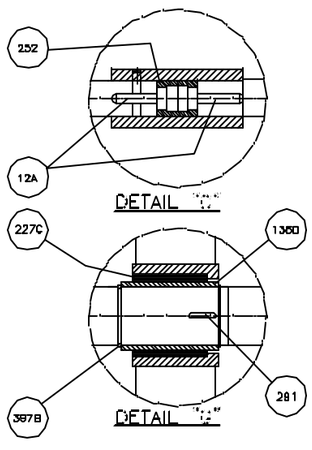

DETAIL "C" DETAIL "G"

REV.	DESCRIPTION	COD No	DATE	REV. ZONE	REV'D	CH KD	APPVL
A	1st REVISED		3.11.04		VPC	PPP	MMT

REVISIONS

PUBLIC POWER CORPORATION — LAVRION V CC PP — DMKT 11 21 302

METKA — SECTIONAL DRAWING — CONDENSATE EXTRACTION PUMPS 243AFKD-4

Complete information for the design of components, systems and components.

EMPRESAS ASOCIADAS

METKA DWG.No.	DIN A1
KKS DWG.No. 5LCB MDAFPD201	SCALE NTS
EA DWG.No.	SHEET OF

P.O. NUMBER: LOI A-4526/AT/at	FLOW: 532 m3/h
END USER: PPC	HEAD: 187 m.
JOB: LAVRION	BHP: 414 Kw.
PLANT: LAVRION CCPP	EFFICIENCY: 77.5%
UNIT: 2	RPM: 1480
SERVICE: CONDENSATE EXTRACTION	FLUID: CONDENSATE
ITEM: 5LCB 10120AP001	TEMPERATURE: 28.4°C.
SERIAL No.: N-148485 AND N-148484	S.G.: 0.970
CUSTOMER INFORMATION	OPERATING CONDITIONS

1st Angle Projection

STATUS OF APPROVAL

ORDER No.

DRAWN BY	V.Pafilo	DATE 3.9.2004
CHECKED BY	A.Pontas	DATE 3.9.2004
APPROVED BY	M.Metrofio	DATE 3.9.2004

APPROVAL NOTE TO CUSTOMER

PROPRIETARY NOTE

FLOWSERVE Pump Division Ceolada Operations

DWG TITLE SECTIONAL DRAWING CONDENSATE EXTRACTION PUMPS 243AFKD-4

SIZE	DRAWING NO.	REV.
A1	243AFKD600XE07	A
	FILE CAD: W1U2202	
SCALE	UNITS	SHEET NO. n/p

REF. FLOWSERVE

Project:

LAVRION V-CCPP
DMKT 11 21 302

Title: Pump Connection Diagram

(Condensate Extraction Pumps 5LCB 10/20 AP001)

Supplier Document No:	-	Issue: 0
KKS Document No:	5-LCB-ESK-FPD-234	
Purpose of issue: For Revision		Date: 8/11/04

00-Y-X-10302-F3/I Issue 1

Prepared: NO

Reviewed: MAP

Approved: MM

CONDENSATE WATER PUMPS

WIRING DIAGRAM

PROJECT: LAVRION

PUMP: 243 APKD-4

5LCB10/20AP001

APLICACIONES TECNICAS Y CONTROL S.A.
C/Cemento,5. TORREJÓN DE ARDOZ
28850 MADRID
Telf.:676.63.63 Fax:676.03.21
E-mail: info@atc-control.com

REV.	Date	Drawing	Check.	Aprobb.
-	-	-	-	-
-	-	-	-	-
-	-	-	-	-

Drawing: O.J.C.	4.11.04	REV.:	Scale	
Revised: N.Ortiz	4.11.04	0	-	
Aprobbal:				

Y/Ref.: 10.07.50.10896	O/Ref.: 240333
Customer: FLOWSERVE	
Drawing Nª: ARM030904003	Sheet:
Description: COVER	1/5

INDEX

CONTROL

APLICACIONES TECNICAS Y CONTROL S.A.
C/Cemento,5. TORREJÓN DE ARDOZ
28850 MADRID
Telf.:676.63.63 Fax:676.03.21
E-mail: info@atc-control.com

REV.	Date	Drawing	Check.	Aprobb.
-	-	-	-	-
-	-	-	-	-
-	-	-	-	-

Drawing: O.J.C.	4.11.04	REV.:	Scale	
Revised: N.Ortiz	4.11.04	0	-	
Aprobbal:				

Y/Ref.: 10.07.50.10896	O/Ref.: 240333
Customer: FLOWSERVE	
Drawing N°: ARM030904003	Sheet:
Description: INDEX	2/5

FRONT VIEW A

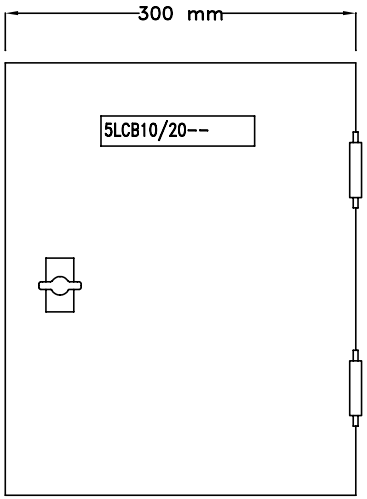

FRONT VIEW A"

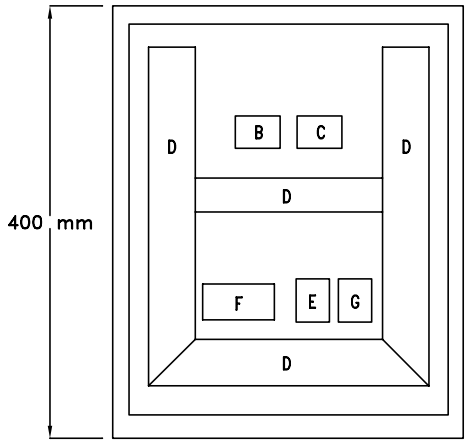

SIDE VIEW

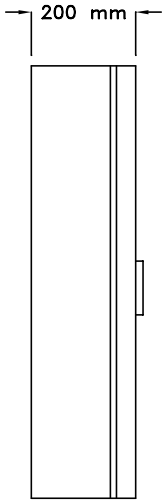

SUPPLIED:	APLICACIONES TÉCNICAS Y CONTROL.
DIMENSIONS CASE:	400x300x200 mm
PROTECTION:	NEMA 4X / IP-65
MATERIAL:	CARBON STEEL PAINTED
WEIGTH:	15 Kgr.
COLOUR:	RAL 7032

LEYENDA

B,C ——— VIBRATION TRANSMITTER
D ——— GUTTER
E ——— REVERSE DETECTOR
F ——— REVERSE DETECTOR TERMINALS & PT100
G ——— BREAKER 230VAC

REV.	Date	Drawing	Check.	Aprobb.
-	-	-	-	-
-	-	-	-	-
-	-	-	-	-

CONTROL

APLICACIONES TECNICAS Y CONTROL S.A.
C/Cemento,5. TORREJÓN DE ARDOZ
28850 MADRID
Telf.:676.63.63 Fax:676.03.21
E-mail: info@atc-control.com

Drawing: O.J.C.	4.11.04	REV.:	Scale	Drawing N°: ARM030904003	Sheet:
Revised: N.Ortiz	4.11.04	0	-	Description: INSTRUMENTATION ELECTRICAL BOX	3/5
Aprobbal:					

Y/Ref.: 10.07.50.10896 | O/Ref.: 240333

Customer: FLOWSERVE

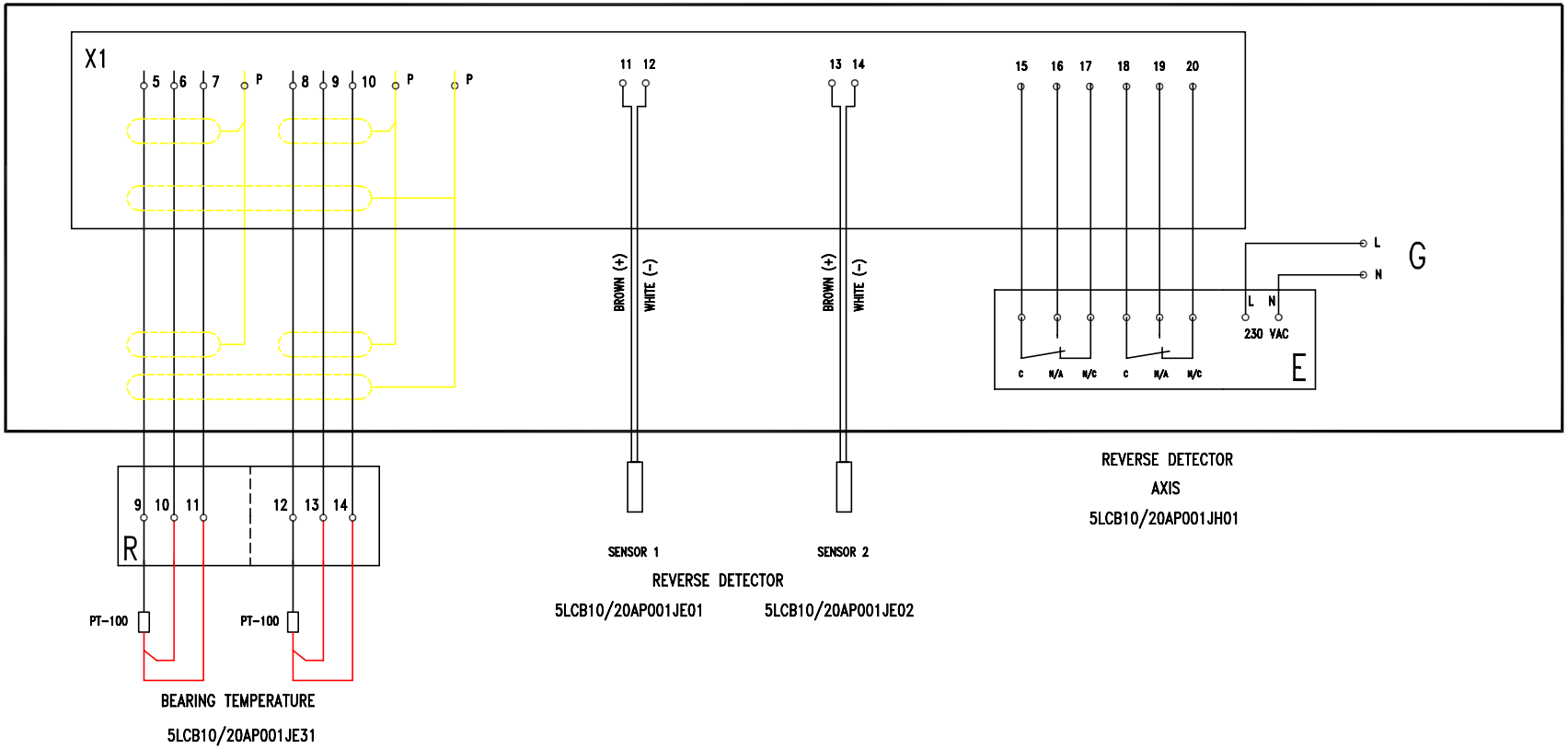

CONTROL

APLICACIONES TECNICAS Y CONTROL S.A.
C/Cemento,5. TORREJÓN DE ARDOZ
28850 MADRID
Telf.:676.63.63 Fax:676.03.21
E-mail: info@atc-control.com

–	–	–	–	–
–	–	–	–	–
–	–	–	–	–
REV.	Date	Drawing	Check.	Aprobb.

Drawing: O.J.C.	4.11.04	REV.:	Scale	
Revised: N.Ortiz	4.11.04	0	–	
Aprobbal:				

Y/Ref.: 10.07.50.10896 | O/Ref.: 240333

Customer: FLOWSERVE

Drawing N°: ARM030904003

Sheet: 4/5

Description: RTD & REVERSE DETECTOR

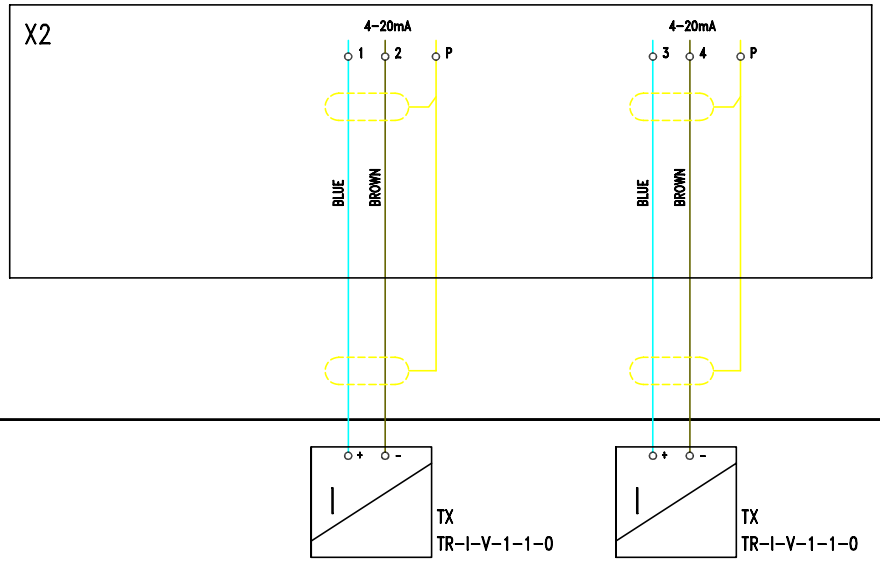

CONTROL

APLICACIONES TECNICAS Y CONTROL S.A.
C/Cemento,5. TORREJÓN DE ARDOZ
28850 MADRID
Telf.:676.63.63 Fax:676.03.21
E-mail: info@atc-control.com

-	-	-	-	-
-	-	-	-	-
-	-	-	-	-
REV.	Date	Drawing	Check.	Aprobb.

Drawing: O.J.C.	4.11.04	REV.:	Scale	
Revised: N.Ortiz	4.11.04	0	-	
Aprobbal:				

Y/Ref.: 10.07.50.10896 O/Ref.: 240333

Customer: FLOWSERVE

Drawing N°: ARM030904003

Sheet: 5/5

Description: VIBRATION TRANSMITTER

Instruments List

Project:

LAVRION V-CCPP
DMKT 11 21 302

Title: Pump Instrument List

(Condensate Extraction Pumps 5LCB 10/20 AP001)

Supplier Document No:	-	Issue: B
KKS Document No:	5-LCB-YLP-FPD-227	
Purpose of issue: For Revision		Date: 05/01/05

00-Y-X-10302-F3/I Issue 1

Prepared: NO

Reviewed: MAP

Approved: MM

FLOWSERVE

Customer: **METKA**
Project: **LAVRION V**
Tag Nº **5LCB10/20AP001**
Service **CONDENSATE PUMPS**
FPD REF: **10.07.50.10896**
P.O. -

SHEET **1**
OF **1**

Equipment	REV.	Tag	Location	Type of instrument	Manufactured/ Supplied by	Model	Medium	Unit	Messur.Range From	Messur.Range To	ALIMENT.	Output	Set Point Alarm	Set Point Trip	Drawing No.	Notes
PUMP	A	5LCB10/20AP001JE31	Thrust bearing	Temperature detector	ATC / Flowserve	ATC-TE-0249	Oil	ºC	0	120	-	Ohm	75	85	I-000240	2x PT100/ 3wires
"	B	5LCB10/20AP001JT01	Pump bearing	Vibration accelerometer	Cemb / Flowserve	TR-I-V-1-1-0	Metal	mm/seg	0	20	24 VCC	4-20mA	10	12	I-000127	2 Wires (M8x1.25)
"	B	5LCB10/20AP001JT02	Pump bearing	Vibration accelerometer	Cemb / Flowserve	TR-I-V-1-1-0	Metal	mm/seg	0	20	24 VCC	4-20mA	10	12	I-000127	2 Wires (M8x1.25)
"	B	5LCB10/20AP001JH10	Pump axis	Reverse detector (amplifier)	P.F.(ATC) / Flowserve	PF-RD-0167	Metal	-	-	-	230 VDC	2 SPDT	-	-	I-000161	
"		5LCB10/20AP001JE01	Pump axis	Reverse detector (sensor 1)	P.F.(ATC) / Flowserve	PF-RD-0167	Metal	-	-	-	-	-	-	-	I-000161	
"		5LCB10/20AP001JE02	Pump axis	Reverse detector (sensor 2)	P.F.(ATC) / Flowserve	PF-RD-0167	Metal	-	-	-	-	-	-	-	I-000161	
"																
"																
"																
"																
"																
"																
"																
"																
"																
"																
"																
"																
"																
"																
"																
"																

Rev.	DESCRIPTION	Name	Date
0	FIRST ISSUE	N.O	07/07/2004
A	SECOND ISSUE	N.O	03/11/2004
B	THIRD ISSUE	N.O.	05/01/2005

Pump: 243APKD-4

Prepared by: N.O.Z
Checked by: M.A.P.M.
App´d by: M.M.

TITLE: **CONDENSATE INSTRUMENT LIST**
PUMP

REF:

DRAWING **5-LCB-YLP-FPD-227** **B**

NOTE: THIS PUMP WORKS WITH A ROTATIONAL SPEED METER MS22-RI WITH ANALOGUE OUTPUT

Project:
LAVRION V-CCPP DMKT 11 21 302

Title: Motor Instrument List
(Condensate Extraction Pumps 5LCB 10/20 AP001)

Supplier Document No:	-	Issue: A
KKS Document No:	5-LCB-YLP-FPD-256	
Purpose of issue: For Revision		Date: 05/01/05

00-Y-X-10302-F3/I Issue 1

Prepared: NO

Reviewed: MAP

Approved: MM

FLOWSERVE

Customer: **METKA**
Project: **LAVRION V**
Tag Nº **5LCB10/20AP001**
Service **CONDENSATE PUMPS**
FPD REF: **10.07.50.10896**
P.O. -

SHEET **1**
OF **1**

Equipment	REV.	Tag	Location	Type of instrument	Manufactured/ Supplied by	Model	Medium	Unit	Messur.Range From	Messur.Range To	ALIMENT.	Output	Set Point Alarm	Set Point Trip	Drawing No.	Notes
MOTOR		5LCB10/20AP001JE21	Motor winding phase R	Temperature detector	**Minco**	**S9785PA100T260Z60**	Metal	ºC	0	200	-	Ohm	**130**	**150**		Pt 100 Single / 3H
"		5LCB10/20 AP001JE22	Motor winding phase S	Temperature detector	**Minco**	**S9785PA100T260Z60**	Metal	ºC	0	200	-	Ohm	**130**	**150**		Pt 100 Single / 3H
"		5LCB10/20AP001JE23	Motor winding phase T	Temperature detector	**Minco**	**S9785PA100T260Z60**	Metal	ºC	0	200	-	Ohm	**130**	**150**		Pt 100 Single / 3H
"		5LCB10/20AP001JE24	Motor winding phase R	Temperature detector	**Minco**	**S9785PA100T260Z60**	Metal	ºC	0	200	-	Ohm	**130**	**150**		Pt 100 single / 3 H / (spare)
"		5LCB10/20AP001JE25	Motor winding phase S	Temperature detector	**Minco**	**S9785PA100T260Z60**	Metal	ºC	0	200	-	Ohm	**130**	**150**		Pt 100 single / 3 H / (spare)
"		5LCB10/20AP001JE26	Motor winding phase T	Temperature detector	**Minco**	**S9785PA100T260Z60**	Metal	ºC	0	200	-	Ohm	**130**	**150**		Pt 100 single / 3 H / (spare)
"	A	5LCB10/20AP001JE34	Radial bearing , driven end	Temperature detector	**Teco / Teco**	**3A955**	Metal	ºC	0	150		Ohm	**90**	**95**		2 x Pt 100 / 3W
"	A	5LCB10/20AP001JE33	Radial bearing , non driven end	Temperature detector	**Teco / Teco**	**3A955**	Metal	ºC	0	150		Ohm	**90**	**95**		2 x Pt 100 / 3W

Rev.	DESCRIPTION	Name	Date
0	FIRST ISSUE	N.O	15/07/2004

Pump: 243APKD-4

Prepared by: N.O.Z
Checked by: M.A.P.M.
App´d by: M.M.

TITLE: **CONDENSATE INSTRUMENT LIST**
MOTOR

REF:

DRAWING **5-LCB-YLP-FPD-256** **A**

Project:
LAVRION V-CCPP DMKT 11 21 302

Title: Pump Valves List
(Condensate Extraction Pumps 5LCB 10/20 AP001)

Supplier Document No:	-	Issue: 0
KKS Document No:	5-PAC-MLP-FPD-226	
Purpose of issue: For approval		Date: 15/07/04

413-005-PM21100-013-A

Prepared: NO

Reviewed: MAP

Approved: MM

FLOWSERVE

Customer: **METKA**
Project: **LAVRION V**
Tag Nº **5LCB10/20AP001**
Service **CONDENSATE PUMPS**
FPD REF: **10.07.50.10896**
P.O. -

HOJA **1**
de **1**

Equipment	REV.	Tag	Location	Type of valve	Drive	Material of casing	Manufactured/ Supplied by	Medium	Size	Connection	Rating	Design Press.(Bar)	Design Max. Tª (ºC)	Model	Drawing No.	NOTES
PUMP		5LCB10/20AA001	Sealing system	Check valve	H	AISI-316	ATC / Flowserve	Seal Water	1/2"	NPT	PN 16	20	150	GE-CHV-0149	I-000144	

Rev.	DESCRIPTION	DATE	Name
0	FIRST ISSUE	08/07/2004	N.O

Drive	Connections
H = Hand drive	Fl = Flanged
E = Electric drive	SW = Socket weld
M = Magnetic drive	NPT = NPT thread
F = Spring drive	GS = GAS thread
A = Automatic	

Pump: 243APKD-4

Prepared by N.O.Z
Checked by M.A.P.M.
App`d by M.M.

TITULO: **VALVES LIST**
PUMP

REF:

PLANO N. **10.07.50.10896** **0**

Project:

LAVRION V-CCPP
DMKT 11 21 302

Title: Valve & Instrument Data Sheet

(Condensate Extraction Pumps 5LCB 10/20 AP001)

Supplier Document No:	-	Issue: 0
KKS Document No:	5-LCB-YHP-FPD-228	
Purpose of issue: For Revision		Date: 2/12/04

00-Y-X-10302-F3/I Issue 1

Prepared: NO

Reviewed: MAP

Approved: MM

CE Ex

- 2 inputs
- Input frequency 0.001 Hz ... 5 kHz
- Analogue output 0/4 mA ... 20 mA
- Measuring range parameterizable
- 2 relay outputs
- 2 electronic outputs, isolated
- Each output individually parameterizable as limit value, increment output, direction of rotation, synchronization monitoring or error message output
- Start-up override
- Lead breakage (LB) and short-circuit (SC) monitoring
- Bounce filter
- Parameterization via PC or control panel (optional)

48 ... 253 V AC / 20 ... 90 V DC

KFU8-UFT-Ex2

48 ... 253 V AC / 20 ... 90 V DC

KFU8-UFT-Ex2.D

(with control panel)

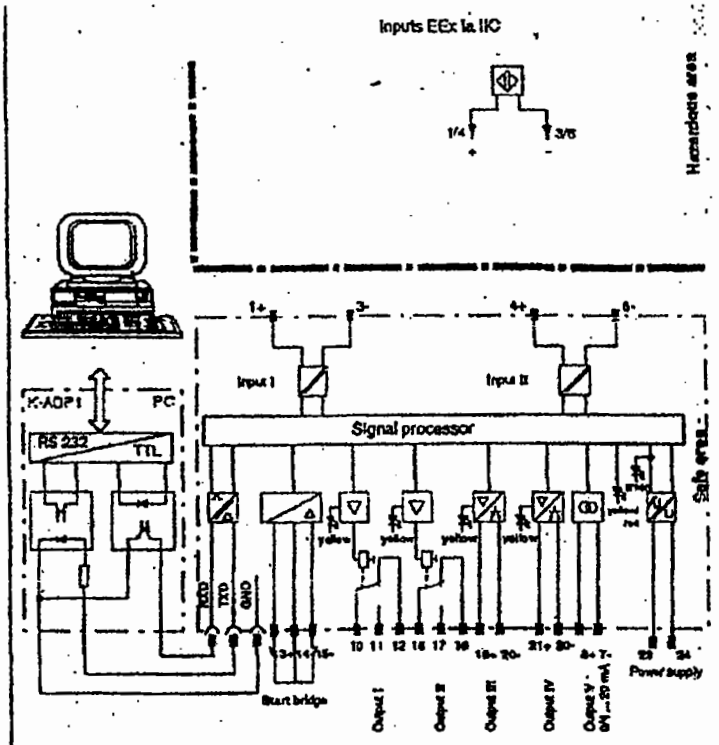

Function

The device processes 2 input frequencies (5 kHz max.). The switch output functions (2 relay and 2 potential free transistor outputs) are parameterizable via the programming jack (software K-PK1) and via the control surface (...-Ex2.D) [max. or min. limit values (alarm), increment output and error signal output]. For each channel a start-up override is integrated that can be activated externally. For the frequency-current-transformation the frequency values for the basic values (0/4 mA ... 20 mA) are parameterizable.
The rotation direction signalling evaluates pulse signals, adjusted to 90°, of both inputs. Depending on mode of operation and parameterization, corresponding outputs switch.
The synchronisation monitor compares the number of pulses of the inputs I and II during a measurement cycle. If the measured pulse difference is higher than the parameterized value, the established output switches. If the number of the admissible synchronisation is exceeded, an error signal is indicated.
Input and output currents are galvanically isolated. The Power Rail realizes the supply and the transfer of the collective error messages.

Aufbau

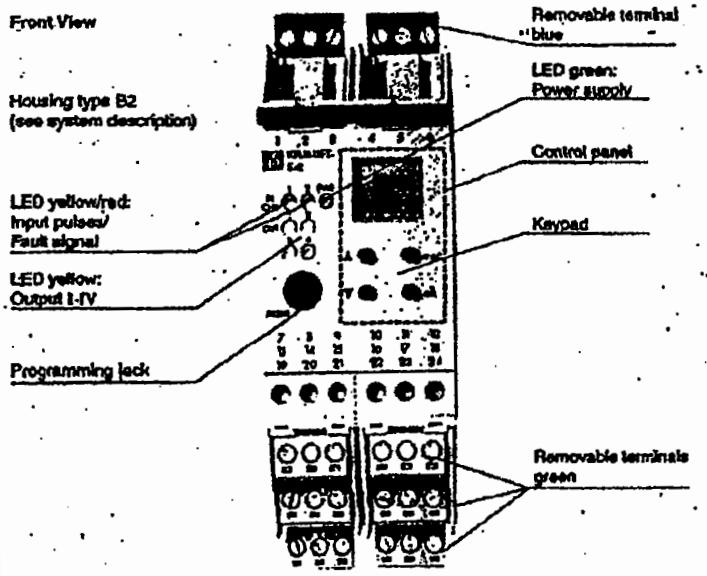

APLICACIONES TECNICAS Y CONTROL, S.A.
Cemento, 5 - TORREJON DE ARDOZ
28850 MADRID
Telf. 91 676 63 63 - Fax 91 676 03 21
e-mail: comercial@atc-control.com

CLIENTE: FLOWSERVE
PEDIDO: 240189
PROYECTO: ARCOS III CONDENSADO
FECHA: 02.06.04
TAG: 5LCB10/20AP001JH10

5LCB10/20AP001 { JH10 / JE01 / JE02

Power supply	
Connection type	terminals 23, 24
Rated operational voltage U_e	20 ... 60 V DC / 48 ... 253 V AC
Safety maximum voltage U_m	125 V DC, 253 V AC
Power loss	2.2 W / 3.5 VA
Power consumption	2.5 W / 4 VA
Input (not intrinsically safe)	
Connection type	start-up override I: terminals 13+, 14- start-up override II: terminals 15+, 14-
Function	start-up override; 1 ... 1000 s, adjustable in steps of 1 s
Open loop voltage	18 V
Short-circuit current	5 mA
Active/Passive	I > 4 mA (for min. 100 ms) / I < 1.5 mA
Input (intrinsically safe)	
Connection type	input I: terminals 1+, 9- input II: terminals 4+, 8-
Nominal data	in accordance with IEC 60947-5-6 (NAMUR, DIN 19234); see system description for electrical data
Input pulse length/input pulse interval	≥ 50 µs / ≥ 50 µs
Lead monitoring	breakage I ≤ 0.15 mA Short circuit protection I > 6.5 mA
Details of certificate of conformity	
Certification number	TÜV 99 ATEX 1471
Group, category, ignition protection method	Ⓔx II (1) G D [EEx ia] IIC
Voltage U_o	10.1 V
Current I_o	13 mA
Power P_o	34 mW
Allowable circuit values	
Ignition protection class, category [EEx ia]	
Explosion group	IIA IIB IIC
External capacitance	93 µF 19.4 µF 2.8 µF
External inductance	1000 mH 730 mH 195 mH
Category, ignition protection method	II (1) G [EEx ia] IIC
Output (not intrinsically safe)	
Connection type	output I: terminals 10, 11, 12 output II: terminals 16, 17, 18 output III: terminals 19+, 20- output IV: terminals 21+, 20- output V: terminals 6+, 7-
Output I and II	signal, relay
Contact loading	250 V AC / 2 A / cos φ ≥ 0.7; 40 V DC / 2 A
Mechanical life	5×10^7 switchings
Pull-in/Drop-out delay	approx. 20 ms / approx. 20 ms
Output III and IV	signal, electronic output, passive
Safety maximum voltage U_m	40 V DC
Signal level	1-signal: (L+) - 2.5 V (50 mA, short-circuit/overload proof) 0-signal: switched off (off-state current ≤ 10 µA)
Output V	analogue
Current range	0 ... 20 mA or 4 ... 20 mA
Quiescent voltage	≤ 24 V DC
Load	≤ 650 Ohm
Fault signal	downscale I ≤ 3.6 mA, upscale I ≥ 22 mA (accord. to NAMUR NE 43), hold last value
Programming interface	
Connection	programming socket
Interface	RS 232
Transfer characteristics	
Resolution	frequency measurement: 0.1 % current output: < 10 µA
Measuring time	≤ 200 ms
Deviation	frequency measurement: 0.1 % of final value current output: < 10 µA
Temperature	frequency measurement: 0.003 % / °C (30 ppm) current output: 0.005 % / °C (50 ppm)
Frequency range	0.001 ... 5 kHz

Ausgabedatum 28.2.01

APLICACIONES TECNICAS Y CONTROL, S.A.
Cemento, 5 - TORREJON DE ARDOZ
28850 MADRID
Telf. 91 676 63 63 - Fax 91 676 03 21
e-mail: comercial@atc-control.com

CLIENTE: FLOWSERVE
PEDIDO: 240189
PROYECTO: ARCOS III CONDENSADO
FECHA: 02.06.04
TAG: 5LCB10/20AP001JH10

5LCB 10/20AP001 { JH10 / JE01 / JE02

5LCB10/20AP001JE31

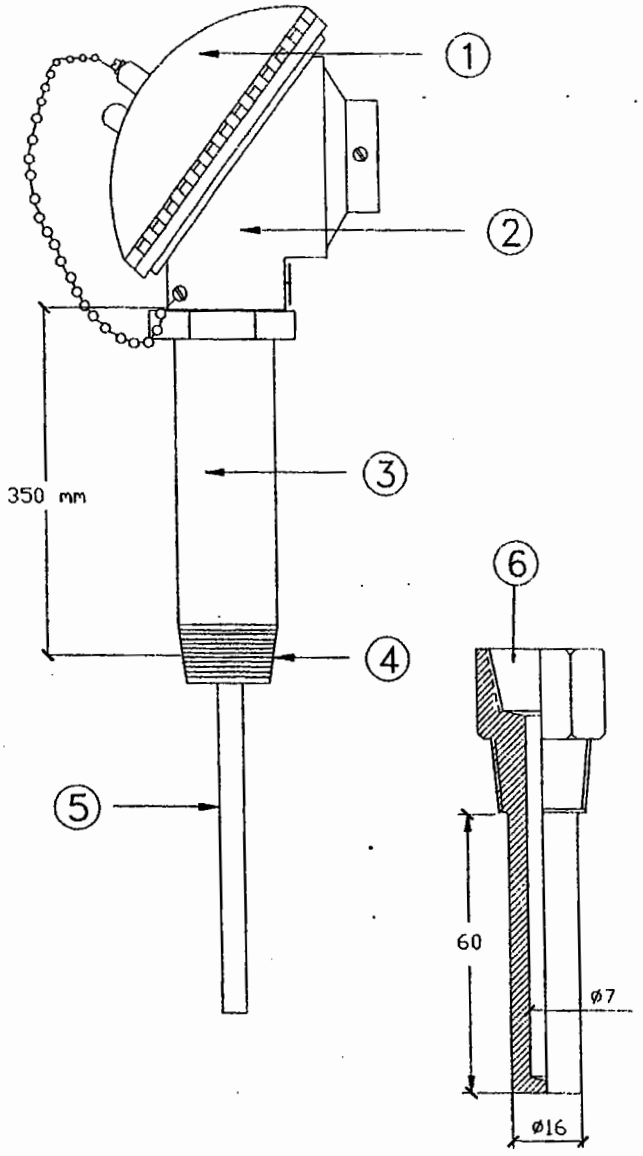

GENERAL SPECIFICATION

Measuring element double PT-100/3w
Table Ref. Temp./Ohm, DIN 43760/IEC751
Protection head IP-65
Tolerance class B
Std. temperature range: -50 to +400°C
Electrical connection: 1/2"NPT-F

MATERIAL SPECIFICATION

POS.	DESIGNATION	MATERIAL
1	Head cover screwed	Aluminium
2	Terminals block ø50mm	Ceramic
3	Nipple 1/2" Sch.80	AISI-316
4	Process connection 1/2"NPT-M	AISI-316
5	Mantel mineral insulated ø6mm	100% MgO
6	Termowell 1/2"NPT-Fx1/2"NPT-M	AISI-316

ATC P/N:
ATC-TE-0249

QTY: 2
TAG: 5LCB10/20AP001JE31
TAG: -

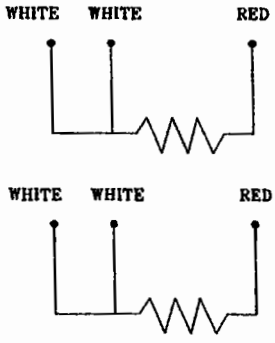

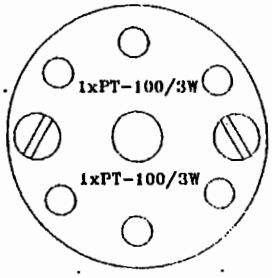

APLICACIONES TECNICAS Y CONTROL S.A.
C/Cemento,5. TORREJÓN DE ARDOZ
28850 MADRID
Telf.:676.63.63 Fax:676.03.21
E-mail: info@atc-control.com

Y/Ref.: O/Ref.: 240189

Customer: FLOWSERVE

REV.	Date	DWG	CHEK.	APPRO.
-	-	-	-	-
-	-	-	-	-

Drawing: N.Ortiz	28.05.04	REV.:	Escale	Drawing N°: TE079703001	Sheet
Cheked: M.A.P	28.05.04	0	-	Description: RTD PROBE	1/1
Approval:					

5LCB 10120A0001 JT02

Technical features

Composition:
- AISI 303 integrated transmitter

Power supply:
- 24 Vdc (24 ÷ 35 Vdc) current loop 4 ÷ 20 mA (2 wires)
- Maximum load 500 Ω

External connections:
- MIL – C – 5015 (2 pin)
- Terminal board (max cable section 2,5 mm²) for hazardous area application

Environmental range and protection degree:
- - 20°C ÷ + 70°C
- IP65 CEI 70-1 (IEC 529) standards

Frequency response:
- 1 ÷ 1000 Hz

Insulation:
- ≥ 1000 V between signal and box

Application axis:
- any

Accessories:
- M8 x 1,25 process connection
- 90° output EExd box ¾" NPT female

Overall dimensions and connections (safe area application)

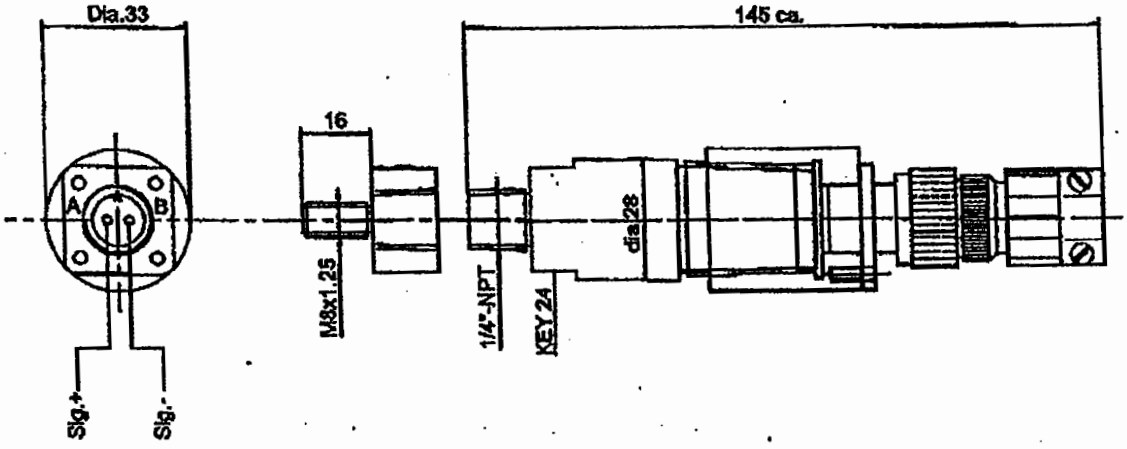

Overall dimensions and connections (Exd application)

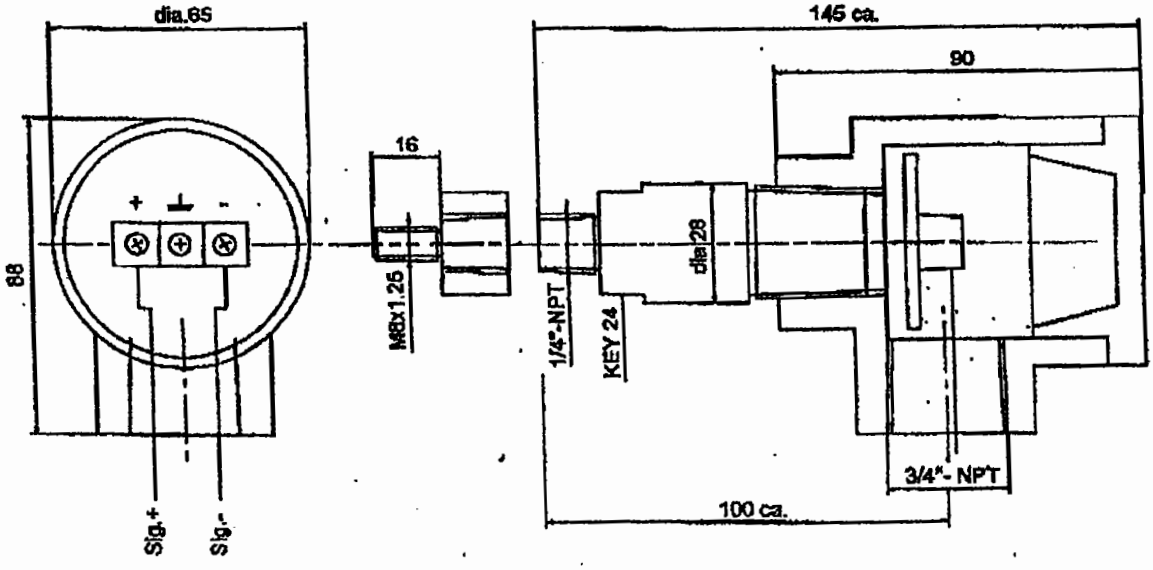

INFORMATION NECESSARY FOR THE ORDER

/ A / B / C / D

TR - I / / / /

5 LCB1D1/20AP0.01
JT02

A: Type of measure

V velocity RMS
A acceleration RMS

B: Measuring range

0 0 ÷ 10 mm/s RMS
1 0 ÷ 20 mm/s RMS
2 0 ÷ 50 mm/s RMS
3 0 ÷ 100 mm/s RMS
4 0 ÷ 1 g RMS
5 0 ÷ 5 g RMS
6 0 ÷ 10 g RMS
7 0 ÷ 20 g RMS
S special to be defined

C: Fixing accessories

0 standard ¼" NPT
1 M8 x 1,25

D: Cabling output box

0 MIL standards 2 pin connector
1 90° output box thread ¾" NPT female EExd

TR-I-V-1-1-0 with 5m cable

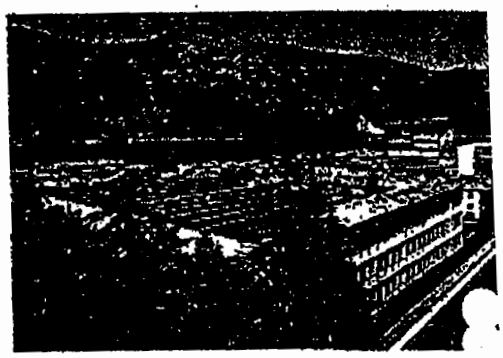

CEMB S.p.A.
Via Risorgimento, 9
23826 MANDELLO DEL LARIO (LC) Italy
www.cemb.com
e-mail: cemb@cemb.com

Vibration analysis division:
phone +39 0341 706111
fax +39 0341 735678
e-mail: stm@cemb.com

CEMB
BALANCING MACHINE

Example of order

/A/B/C/D

TR - I /V/0/0/1

- D: threaded output ¾" NPT for hazardous area application
- C: standard fixing ¼" NPT
- B: measuring range 0÷10 mm/s RMS
- A: velocity RMS

MINCO

SECTION D

STATOR WINDING RESISTANCE TEMPERATURE DETECTORS
for protection of large motors and generators

- RTD's fit between stator windings for continuous protection
- Class B for use to 130°C (266°F); Class H for use to 180°C (356°F)
- Platinum, nickel, or copper elements
- Standard or custom dimensions fit any machine
- Extensive stocking program for urgent requirements

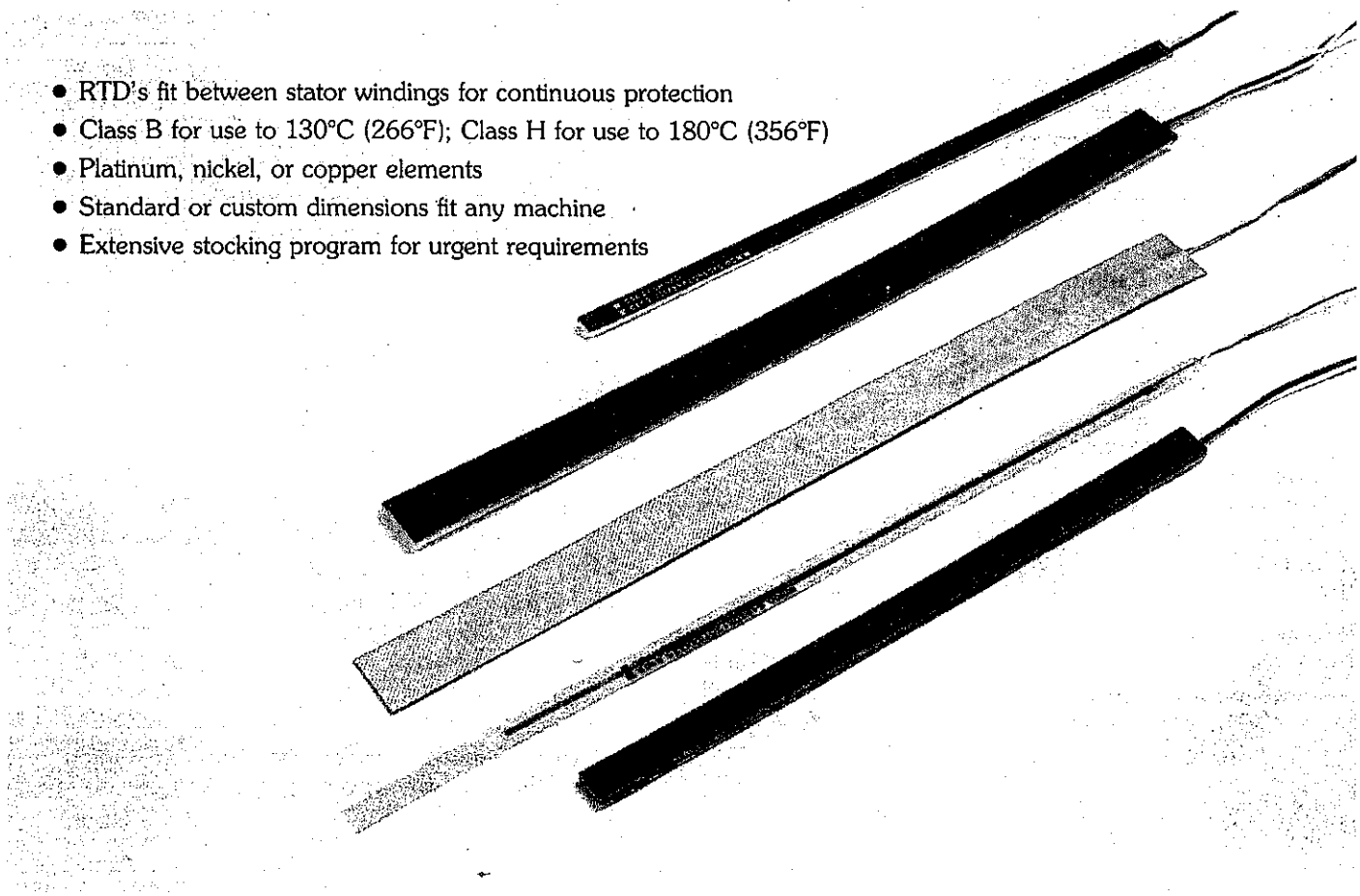

Stator winding temperature detectors, often called "sticks," are flat laminated RTD's (Resistance Temperature Detectors). These detectors are installed in slots between stator windings, near the hottest points, to protect against overheating.

The National Electrical Manufacturers Association (NEMA) recognizes embedded detectors as a standard protection for motor and generator insulation. Because they sense temperature continuously, unlike on-off devices, these detectors can provide early warning of overheating so steps can be taken to prevent possible burnout. Unnecessary tripouts are avoided.

Minco has manufactured stator winding detectors since 1960, and is now the world's leading supplier. Our standard product line offers a complete selection of insulation classes, sensing elements, and dimensions, reducing the need for costly specials. All Minco detectors meet the specifications of ANSI C50.10-1977 for general requirements for synchronous motors.

How to Order

1. Choose an RTD element to match existing instrumentation. Elements are non-inductively wound in long strips to average out temperature gradients.
2. Choose Class B or Class H insulation to match the temperature rating of your motor or generator.
3. Choose Teflon* or Kapton* leadwire. Teflon is less expensive. Kapton offers improved dielectric strength, radiation resistance, abrasion resistance, and less tendency to cold flow under extreme pressure.
4. Find the model with the proper thickness. Determine width and length to fit your stator slot and order by complete part number. Most models are available from stock in standard dimensions and moderate quantities.
5. If catalog models do not meet your requirements, see the list of special design possibilities on page 32. We specialize in custom designs for unique applications.

*Teflon and Kapton are DuPont tradenames.

STATOR WINDING RESISTANCE TEMPERATURE DETECTORS

General Specifications: Stator Winding RTD's

Class	Body Material	Maximum Temperature	Flame Resistance	Impact Strength	Flexural Strength	Dielectric Strength
B	Epoxy Glass	130°C (266°F)	Very Good	Excellent	Good	3200 VRMS
H	Polyester Glass	180°C (356°F)	Excellent	Good	Fair	2000 VRMS
H	Teflon Glass	180°C (356°F)	Very Good	Good	Very Good	3200 VRMS

Dielectric strength is tested at 60 Hz, between leadwires and the external flat body surface for 1 to 5 seconds.

Detector length (inches):
Standard: 6, 10, 11, 12; other lengths from 4 to 30".
Custom: Length is limited only by practical considerations of handling and shipping. Minco has built detectors as long as 20 feet.
Tolerance: Lengths 24 or less: ± .12.
Lengths greater than 24: ±.25.

Detector width (inches):
Standard: .260, .305, .344, .406, .455, .500, .563, .656, .750, .875, 1.00, 1.06, 1.125, and 1.25.
Custom: Other widths available.
Tolerance: Widths .750 or less: +.000/−.020.
Widths greater than .750: +.000/−.040.

Detector thickness (inches):
Standard: .030, .050, .078.
Custom: .094, .125, .188, .250, and other thicknesses.
Tolerance: ±.010 (.030 thick ±.005).

Elements:

Code	Element	TCR (Ω/Ω/° C)
CA	Copper, 10 ± .02 Ω at 25°C	.00427
NA	Nickel, 120 ± .6 Ω at 0°C	.00672
PA	Platinum, 100 ± .5 Ω at 0°C	.00392
PD	Platinum, 100 ± .12 Ω at 0°C	.00385
PE	Platinum, 100 ± .5 Ω at 0°C	.00385

TCR is the Temperature Coefficient of Resistance in Ω/Ω/°C for the range 0 to 100°C. PD elements meet the "international standard" DIN 43760, Class B. PE elements have the same nominal TCR, but looser tolerance for lower cost.

Leads resistance is included in the calibration tolerance of 2-lead models (except PD models) for lead lengths up to 36".

Color coding: All RTD bodies are marked with colored ink to identify element type:
Yellow: Copper.
Red: Nickel.
Blue: Platinum.

Leadwires: Stranded copper with Teflon or Kapton insulation. Other leadwire coverings are available on special order.

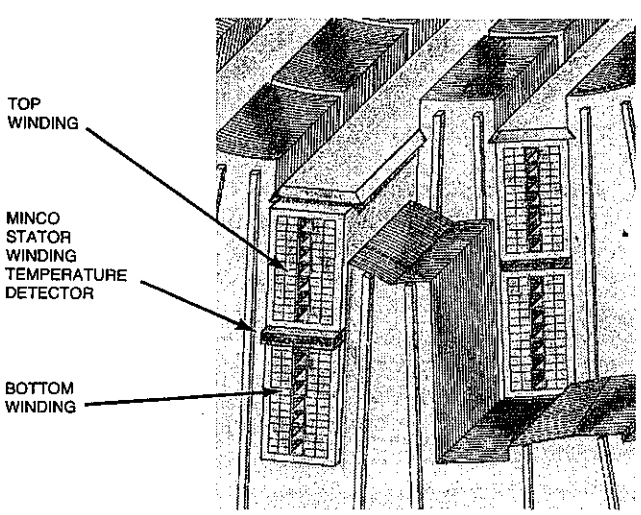

Typical Installation

A cross section through a stator slot shows where a Minco temperature detector is usually installed.

STATOR WINDING RESISTANCE TEMPERATURE DETECTORS

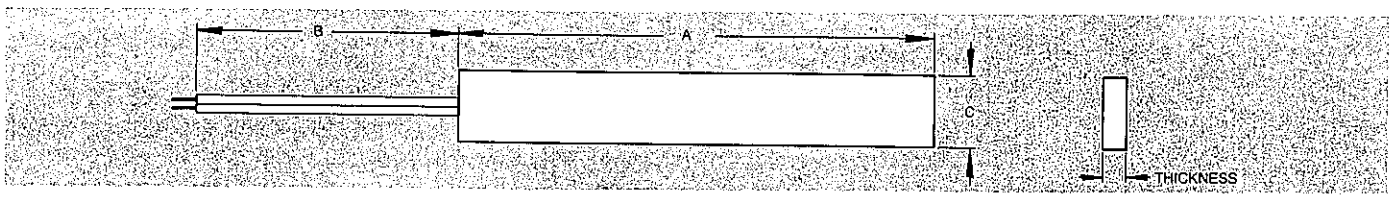

Class B

.078" Thick
Body Material: Epoxy glass.
Leadwires: AWG 22.

Model	Element
S3CA	10 Ω Copper
S4NA	120 Ω Nickel
S11PA	100 Ω Platinum (.00392)
S8011PE	100 Ω Platinum (.00385)

.050" Thick
Body Material: Epoxy glass.
Leadwires: AWG 26.

Model	Element
S23CA	10 Ω Copper
S24NA	120 Ω Nickel
S7682PA	100 Ω Platinum (.00392)
S8013PE	100 Ω Platinum (.00385)

.030" Thick
Body Material: Epoxy glass.
Leadwires: AWG 30.

Model	Element
S1120CA	10 Ω Copper
S1140NA	120 Ω Nickel
S1320PA	100 Ω Platinum (.00392)
S8009PE	100 Ω Platinum (.00385)

Class H

.078" Thick
Body Material: Polyester glass.
Leadwires: AWG 22.

Model	Element
S18CA	10 Ω Copper
S15NA	120 Ω Nickel
S13PA	100 Ω Platinum (.00392)
S8012PE	100 Ω Platinum (.00385)
S11016PD	100 Ω Platinum (.00385)

.050" Thick
Body Material: Teflon glass.
Leadwires: AWG 26.

Model	Element
S7401CA	10 Ω Copper
S7401NA	120 Ω Nickel
S7401PA	100 Ω Platinum (.00392)
S8014PE	100 Ω Platinum (.00385)

.030" Thick
Note: These detectors are .045" thick over the leads attachment area. This area extends into the body a maximum of .62".
Body Material: Teflon glass.
Leadwires: AWG 30.

Model	Element
S1220CA	10 Ω Copper
S1240NA	120 Ω Nickel
S1420PA	100 Ω Platinum (.00392)
S8010PE	100 Ω Platinum (.00385)

How to Order Stator Winding RTD's

S3CA 245 T 344 Z 36 Sample part number

- 36 — Leadwire length B in inches
- Z — Y = 2 leads; not available with CA or PD elements; Z = 3 leads
- 344 — Width C in .001" increments. Example: 344 = .344". Specify standard widths when possible
- T — Insulation over leadwires: T = TFE Teflon; K = Kapton
- 245 — Length A in .1" increments. Example: 245 = 24.5"
- S3CA — Model number; specifies element type, insulation class, thickness, and leadwire AWG

Stator Detectors

STATOR WINDING RESISTANCE TEMPERATURE DETECTORS

Special Models Available

In addition to the standard models described in this bulletin, Minco can supply:

- Thermocouples with E, J, K, or T junctions in equivalent sizes and styles.
- Special RTD elements. Options include platinum to Ontario Hydro or SAMA specifications, or nickel to meet DIN 43760.
- Dual element sticks. Elements may be identical, or we can incorporate two different elements within the same detector body.
- Greater dielectrics. Contact us if standard models do not meet your dielectric strength requirements.
- Semi-conductive surface coating to shield RTD's from electric fields.
- Detector bodies with holes or cutouts for mounting.
- Special testing. For example, we test one model for dielectric strength at 8000 VAC while subjecting it to 200 psi pressure. Electrical and environmental testing is available to meet stringent quality specifications.

Contact us with your special application requirements.

Other Minco Products for Motor and Generator Protection

Contact Minco for all your temperature instrumentation needs. In addition to stator winding detectors, we offer:

- Flexible Thermal-Ribbon™ resistance thermometers for small motors or retrofit installations.
- Tip-sensitive RTD or thermocouple probes for bearing protection.
- Miniature temperature detectors for embedment in the babbitt layer of large bearings.
- Three-channel temperature alarms for continuous protection. Featuring RTD input, these alarms have three setpoints for versatile control. The first setpoint controls cooling fans, the second setpoint sounds an alarm, and the third shuts the machine down.
- Miniature two-wire transmitters to provide a standard 4 to 20 mA signal to remote instrumentation.
- Digital and analog readouts with RTD input.
- Etched-foil strip heaters for anti-condensation protection.

When quality and performance are as important as price, call. . .

MINCO PRODUCTS, INC.

7300 Commerce Lane/Minneapolis, Minnesota 55432 U.S.A.
Telephone: (612)571-3121/TWX: 910-576-2848/FAX: (612)571-0927

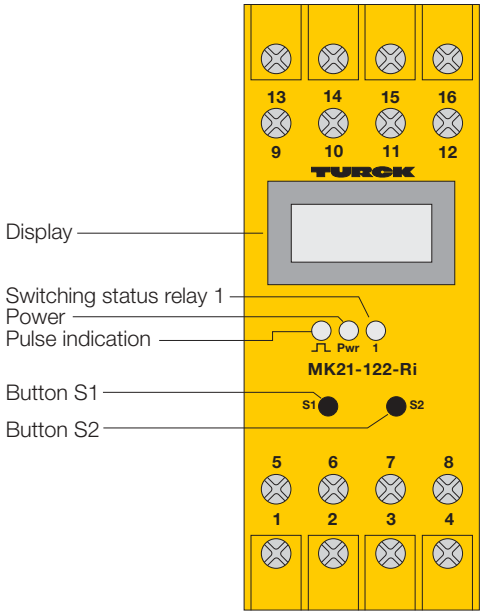

Rotational Speed Monitor with Frequency-Current Converter MK21-122-Ri 1-channel

2

- **1-channel rotational speed monitor with frequency-current converter**
- **Overspeed and underspeed detection plus window function**
- **For use with sensors according to EN 60947-5-6 (NAMUR), 3-wire sensors and external signal sources with a pulse level 5...30 VDC**
- **Line monitoring of NAMRUR sensors**
- **Detection range 1 mHz...10 kHz (0.06...600 000 pulses/min[1])**
- **Simple menu-guided parameterisation**
- **Full galvanic isolation**
- **Relay output with one SPDT contact**
- **Analogue current output: 0...20 mA / 4...20 mA**
- **Potential-free pulse output**
- **Universal supply voltage (20...250 VUC)**

The MK21-122-Ri is a rotational speed monitor designed to monitor pulse sequences from rotating shafts on motors, gears, turbines etc., for overspeed and underspeed conditions relative to pre-adjusted limit values. The analogue output provides a current signal proportional to the rotational speed for further processing. A display located on the front cover indicates the actual speed.

Sensors per EN 60947-5-6 (NAMUR), 3-wire sensors or external signal sources may be used for signal detection. Line monitoring for short-circuit and/or wire-break conditions can be adjusted when using NAMUR sensors. If there is an error in the input circuit, the relay de-energises, the analogue outputs goes to either 0 mA or 24 mA (depending on setting) and the yellow pulse LED changes to red. 3-wire pnp sensors can be powered with 12 V (≤ 20 mA) by the rotational speed monitor. External signal sources must have a signal range from 5...30 VDC. The potential-free pulse output provides the input signal for additional processors.

To provide fast response times for applications with relatively low speed, the device operates on a digital pulse principle. High speed monitoring is based on a time window. In low-speed applications, the response time depends on the pulse period.

Device parameterisation is accomplished with two push buttons. The settings are indicated via the display. The relay output can be programmed for overspeed or underspeed detection, or a window function, or a combination of both. The switching hysteresis is defined by the adjustable switch ON and OFF points.

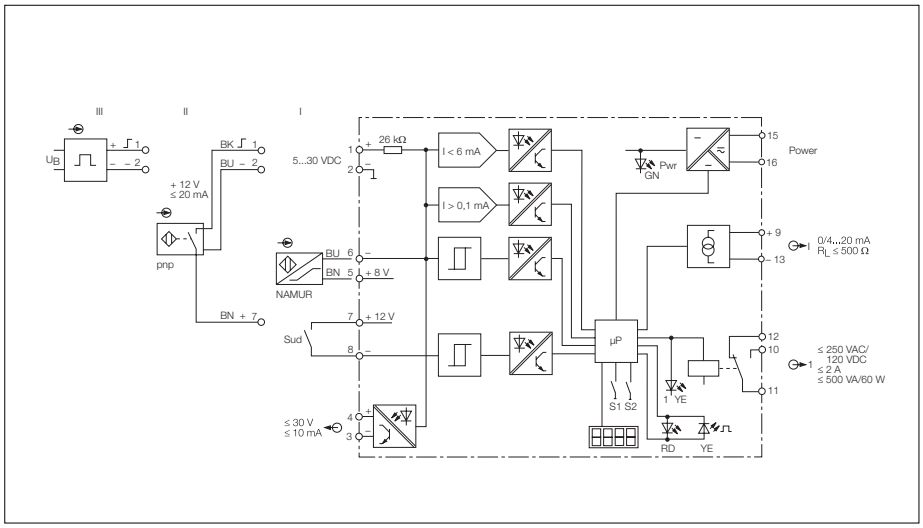

Rotational Speed Monitor MK21-122-Ri

The relay operates in the normally open mode; i.e. the relay is energised if the speed is within the acceptable range. The relay may also be used as an alarm output. The relay will then de-energise if there is an input circuit error or a power failure.

In the underspeed monitoring mode, it is possible to adjust a start-up time delay (AU-time) during which the output relay is constantly energised. Consequently underspeed indications are inhibited during system start-up. The start-up time delay is activated by linking terminals 7 and 8 or by applying power to the device after the terminals have been linked.

The upper und lower range value can be freely adjusted. Within the measuring range (selectable ranges 0...20 mA or 4...20 mA), the frequency is converted linearly into a current value. A damping time, during which the current output follows a change of frequency with a defined delay, is adjustable.

The actual speed and the limit value settings are displayed in Hz. By adjusting a time basis and programming the number of pulses per rotation, it is possible to adjust all settings and the display to the required measuirng unit. Suppose, the display should be in min^{-1} instead of Hz, the time-based factor adjustment would be 60.

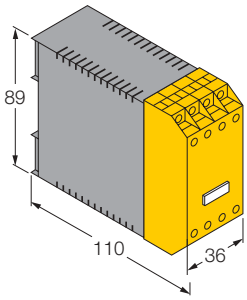

Type	MK21-122-Ri
Ident-no.	7543056
Supply voltage U_B	20...250 VUC
Line frequency (AC)	40...70 Hz
Power consumption	≤ 2.5 W
Galvanic isolation	between input circuit, output circuit and supply voltage for 250 V_{rms}, test voltage 2.5 kV_{rms}
Rotational speed monitoring	underspeed/overspeed
Monitoring range/adjustable range	0.06...600 000 min^{-1} (digitally adjustable)
– Input frequency	≤ 1 200 000 min^{-1} (20 kHz)
Pulse duration	≥ 0.02 ms
Pulse pause	≥ 0.02 ms
Start-up time delay	0…1000 s (adjustable)
Input circuits	
NAMUR input	to EN 60947-5-6, (NAMUR)
– Operating values	U_0 = 8.2 V; I_k = 8.2 mA
– Switching threshold	1.55 mA
– Switching hysteresis	0.2 mA
– Wire-break threshold	≤ 0.1 mA
– Short-circuit threshold	≥ 6 mA
3-wire sensor	
– Voltage	12 V
– Current (sensor no-load current)	≤ 20 mA
External signal source	
– 0-Signal	0...3 V
– 1-Signal	5...30 V
– Input resistance	26 kΩ
Output circuits	1 relay
Relay output	1 SPDT contact
– Switching voltage	≤ 250 V
– Switching current	≤ 2 A
– Switching capacity	≤ 500 VA/60 W
– Switching frequency	≤ 5 Hz
– Contact material	Ag-alloy + 3 µm Au
Analogue output	
– Current source	0/4...20 mA
– Load	≤ 500 Ω
Pulse output	
– External voltage	< 30 V
– Current	≤ 10 mA
LED indications	
Power	green
Switching status	2 x yellow
Pulse indication (dual colour LED)	yellow – error: red
Display	LCD-Display (four digits)
Housing	16-pole, 36 mm wide, Polycarbonate/ABS flammability class V-0 per UL 94
Mounting	panel mounting or snap-on clamps for top-hat rail (DIN 50022)
Connection	screw terminals with self-lifting pressure plates
Connection profile	≤ 2 x 2.5 mm^2 or 2 x 1.5 mm^2 with wire sleeves
Protection degree (IEC 60529/EN 60529)	IP20
Temperature range	-25…+60 °C

 Hans Turck GmbH & Co.KG • D–45466 Mülheim/Ruhr • Tel. 0208/4952-0 • Fax 0208/4952-264 • E-Mail: turckmh@mail.turck-globe.de • www.turck.com

Data sheets

Project:

LAVRION V-CCPP
DMKT 11 21 302

Title: Pump Data Sheets

(Condensate Extraction Pumps 5LCB 10/20 AP001)

Supplier Document No:	-	Issue: 4
KKS Document No:	5-LCB-MHP-FPD-222	
Purpose of issue: For Revision		Date: 13/12/04

00-Y-X-10302-F3/I Issue 1

Prepared: MM

Reviewed: LQ

Approved: CV

CLIENT: METKA

PROJECT: LAVRION V

SERVICE: Condensate Pumps

REV. 4 13/12/04

PUMP

Service		Condensate Pumps
Number of Pumps		2
Type of Pumps		243 APKD - 4
Liquid		Condensate

HYDRAULIC CHARACTERISTICS

		Operating	Design	Run-out	50% max Normal Flow
Temperature of pumped fluid	ºC	33,2	26,4		
Specific Gravity		0,9946	0,9970	0,9970	0,9970
Flow	m^3/h	410	632	805	421
TDH	m	208	187	161	207
Pressure at discharge flange	bar(a)	20,6	18,3	15,8	20,3
Speed	rpm	1.480	1.480	1.480	1.480
Efficiency	%	64,9%	77,5%	75%	65%
Power	kW	356	414	469	364
NPSHR (NPSHA 0 referred to suction nozzle)	m	1,9	2,8	3,6	2
Minimum Flow	m^3/h	123			
Shut of valve TDH	m	222			

CONSTRUCTIVE CHARACTERISTICS

Design Pressure for can and suction bell	barg	4
Design Pressure for casing and column	barg	30
Design Temperature	ºC	75
Hydrostatic HP Pressure	barg	45
Hydrostatic LP Pressure	barg	11
Number of stages		4
First Stage		Double suction
Setting (can length)	mm	4.285
Suction Flange // Discharge Flange		20" 150# RF // 12" 300# RF
Type of seal		Flowserve Mechanical Seal
Rotation Direction, from coupling		CCW
Noise level, at one (1) metre distance	dB	82
Thrust Bearing location		In pump
WR^2	kg m^2	5,3
Net Pump Weight (Approx.)	kg	3.050
Motor Weight (Approx.)	kg	3.800
Total Approx. Weight (Pump & Motor)	kg	6.850
Down Thrust, design	kg	2.161
Up Thrust, maximum	kg	3.331
Up Thrust	kg	1.333

MOTOR

Supplier		TECO Westinghouse
Recommended Motor Power	kW	500
Speed	rpm	1.500
Voltage	V	6.000
Protection		IP-55

Project:

LAVRION V-CCPP
DMKT 11 21 302

Title: Pump Performance Curves

(Condensate Extraction Pumps 5 LCB10/20 AP001)

Supplier Document No:	-	Issue: 2
KKS Document No:	5-LCB-MDG-FPD-223	
Purpose of issue: For approval		Date: 8/07/04

00-Y-X-10302-F3/I Issue 1

Prepared: MM

Reviewed: LQ

Approved: CV

Client:	**METKA**		Project:	**LAVRION V**
End User:	**PPC**	REV. 2 11/06/04	Service:	**Condensate Pumps**
Location:	**GREECE**		Referemce:	**5LCB10/20AP001**
Pump Type:	**243 APKD - 4**		Quantity:	**2**
Flow:	**632**	m^3/h	TDH:	**187** m
RPM:	**1480**		Curve Number:	**54517 - 54511**

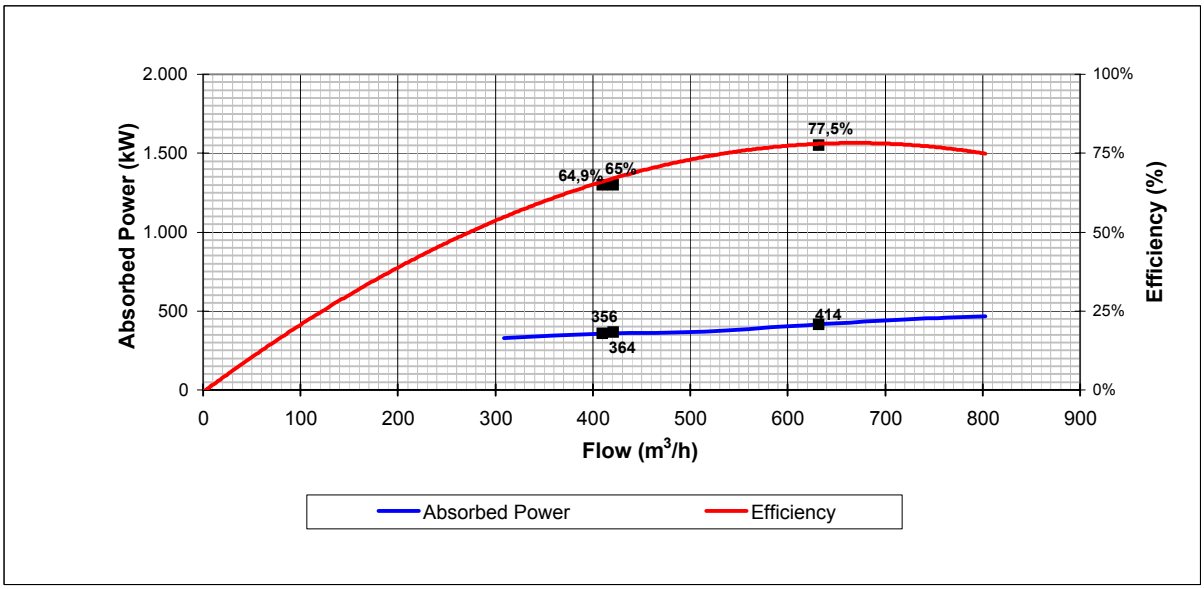

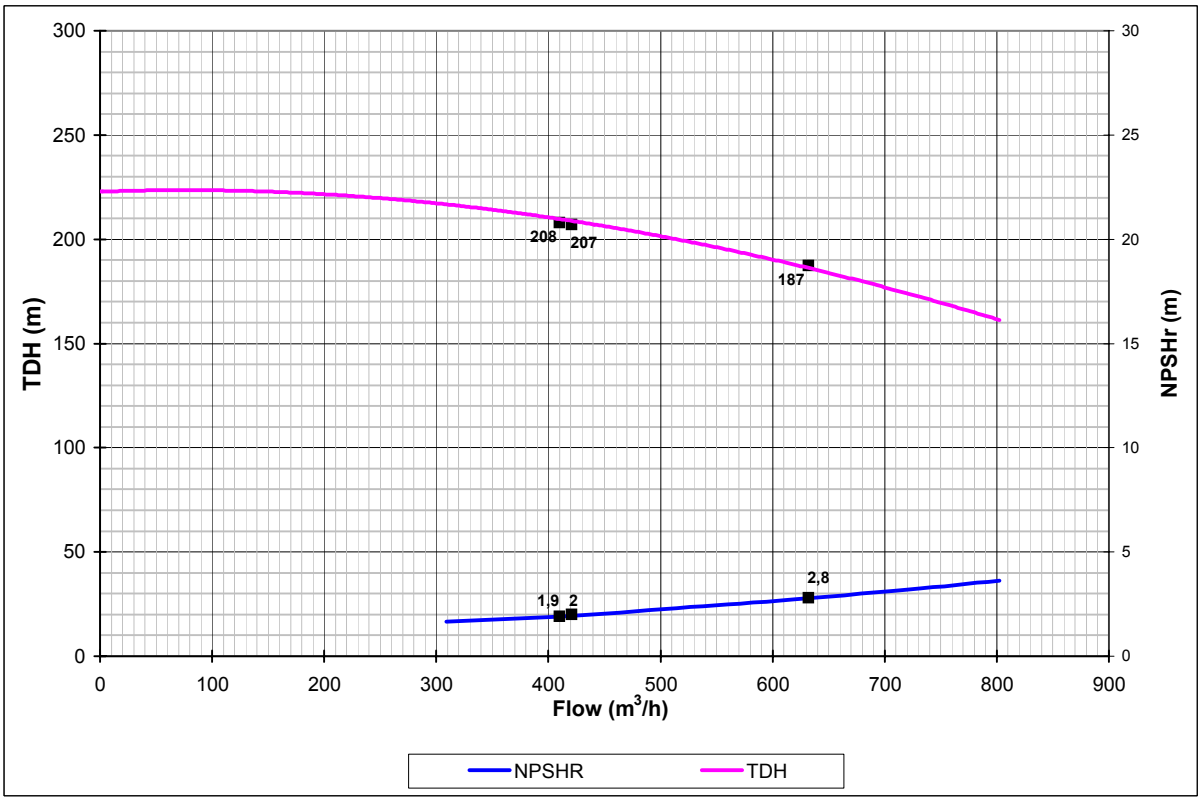

Curves are approximate. Pump is guaranteed for one set of conditions. Capacity and head guarantees are based on shop test. Efficiency is being calculated at cold conditions.

Mechanical seal Manual

FLOWSERVE®

Flow Solutions Division

Mechanical Seal
General Installation Instructions

These installation instructions can be used for the following seal types:

Pusher seals: Q series, U series, D series, RO, CRO, P series, Europac 6 series, Europac 306, Allpac 4 series, Allpac N series, UHT series, DHT series, HSC, HSH, FRO, LD, HD series, SRO, Simpac 3 series, Centipac 1 series.

Bellows seals: BX series, CBR series, BXRH, BXH series, BXLS series, BL, BRC series, PB, PC, CBS, PBS, PBR, X series

Table of Contents

page no.

1. Drawing, Brief Description, Functional requirements

1.1 Assembly Drawing

The assembly drawing is included in the shipping box with the mechanical seal.

1.2 Brief Description

A mechanical seal is a device designed to seal a rotating shaft against a stationary housing, e.g. a pump shaft against a pump casing. The stationary components will consist of a seal ring and (depending on the design) a springloaded element. The spring-loaded element can be a spring or a bellows. The seal ring is sealed against the housing with a secondary gasket, e.g. an O-ring. The rotating components will consist of a seal ring and (depending on the design) a spring-loaded element.
The spring-loaded element can be a spring or a bellows. The seal ring is sealed against the shaft with a secondary gasket, e.g. an O-ring.

A mechanical seal can be supplied as a pre-assembled cartridge or in separate components. Assembly is done in accordance with the assembly drawing. A mechanical seal will run in the pumped product or external source fluid. To provide lubrication, a film of liquid must always be present between the seal faces. The sealing surfaces are separated from each other by the seal liquid film during shaft rotation and in principle operate without contact and thus minimal wear under these conditions.

1.3 Functional requirements

The proper functioning of a mechanical seal is only achieved once the following conditions have been met:

- The sealing surfaces are lapped within specification
- Perpendicularity and concentricity between the shaft and the seal chamber face and bore respectively

- Freedom of movement of the spring loaded components in axial direction
- Axial and radial shaft movements within Flowserve or OEM tolerances whichever is the tightest.
- The seal is operated under the conditions for which it was selected.
- The equipment in which the seal(s) is (are) installed is operated within normal parameters (no cavitation, excess vibration etc.)
- Prevention of sedimentation on shaft or sleeve surfaces caused by for instance crystallisation or polymerisation
- Permanent seal liquid film between the sealing surfaces

Failure to meet these requirements will result in excessive leakage and/or shortened seal life

2. Safety

Please read these instructions carefully. Installation in accordance with the following instructions will contribute to long and trouble free operation of the mechanical seal.
For related mechanical seal auxiliary equipment (reservoirs, coolers, etc.), separate instructions will be provided.

The ultimate user must ensure that personnel assigned to handle, install and operate the mechanical seal and related equipment is well acquainted with the design and operating requirements of such equipment.

Damage to any of the seal components and in particular the faces may cause (excessive) leakage in liquid or gas form. The degree of hazard depends on the sealed product and may have an effect on people and/or the environment. Components coming into contact with leakage must be corrosion resistant or suitably protected. Plant regulations concerning work safety, accident prevention and pollution must be strictly adhered to.

3 General

All illustrations and details in these installation and operating instructions are subject to changes that are necessary to improve product performance without prior notice.
The copyright of these instructions is the property of Flowserve. These instructions are intended for maintenance, Operating and Supervisory personnel and contain regulations and drawings of a technical character that may not, in full or in part, be copied, distributed, used without authorisation for competitive purposes, or given to others.
It should be understood that Flowserve does not accept any liability for instances of damage and/or malfunctioning incurred through non-adherence to these installation instructions.

4. Transport, Storage

The mechanical seal and related equipment must be transported and stored in the unopened, original shipping box. The warehouse in which the mechanical seals and related equipment are stored must be dry and free of dust.
Avoid exposing equipment to large temperature fluctuations and radiation.

Parts or complete mechanical seals that have been dropped or otherwise have been subjected to heavy impacts during transport must not be installed.
An inspection by Flowserve or its appointed representative is strongly advised

After a storage period of 3 years the mechanical seal must be inspected for its “as new” properties. This applies in particular to the seal faces and secondary sealing elements. An inspection by Flowserve becomes necessary.
If the equipment is to be preserved with the mechanical seal(s) installed, the preserving medium must not impair the function of the mechanical seal by e.g. fouling of the seal faces and/or attack the secondary seals.

5. Equipment Check

5.1 Follow plant safety regulations prior to equipment disassembly:
- 5.1.1 Wear designated personal safety equipment
- 5.1.2 Isolate equipment and relieve any pressure in the system
- 5.1.3 Lock out equipment driver and valves
- 5.1.4 Consult plant Material Safety Data Sheet (MSDS) files for hazardous material regulations

5.2 Disassemble equipment in accordance with the equipment manufacturer's instructions to allow access to seal installation area.

5.3 Remove existing sealing arrangement (mechanical seal or otherwise). Clean seal chamber and shaft thoroughly.

5.4 Verify the shaft dimensions as shown on the seal assembly drawing. Inspect surfaces under gaskets to ensure they are free from pits or scratches.

5.5 Verify the seal chamber bore or OD pilot fit as shown on the seal assembly drawing.

5.6 Check seal assembly drawings for any modifications (reworks) to be made to the equipment for mechanical seal installation and act accordingly.

Shaft runout should not exceed 0,05 mm (.002") TIR (Total Indicator Reading) at any point along the shaft for ball or roller type bearings. For sleeve type bearings, refer to manufacturer instructions.
If the equipment is not completely dismantled, verify runout near seal location.

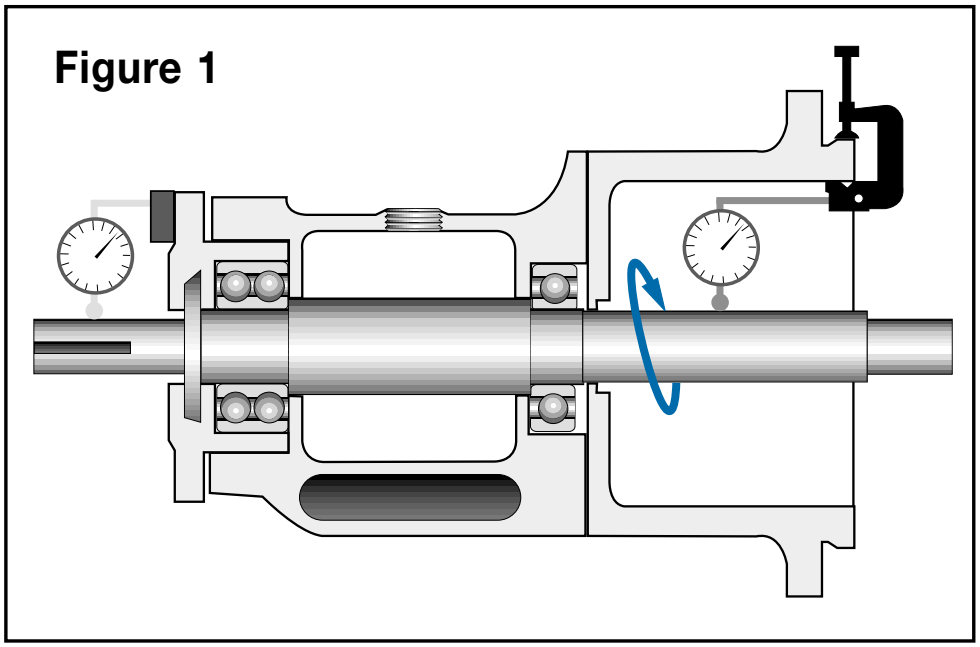

The above values apply to shaft speeds in the

range from 1000 to 3600 RPM. For values above and below, consult your Flowserve representative. See figure 1.

Shaft endplay should not exceed 0,10 mm (.004”) TIR on ball type thrust bearings. For pad type thrust bearings, refer to manufacturer's instructions. See figure 2.

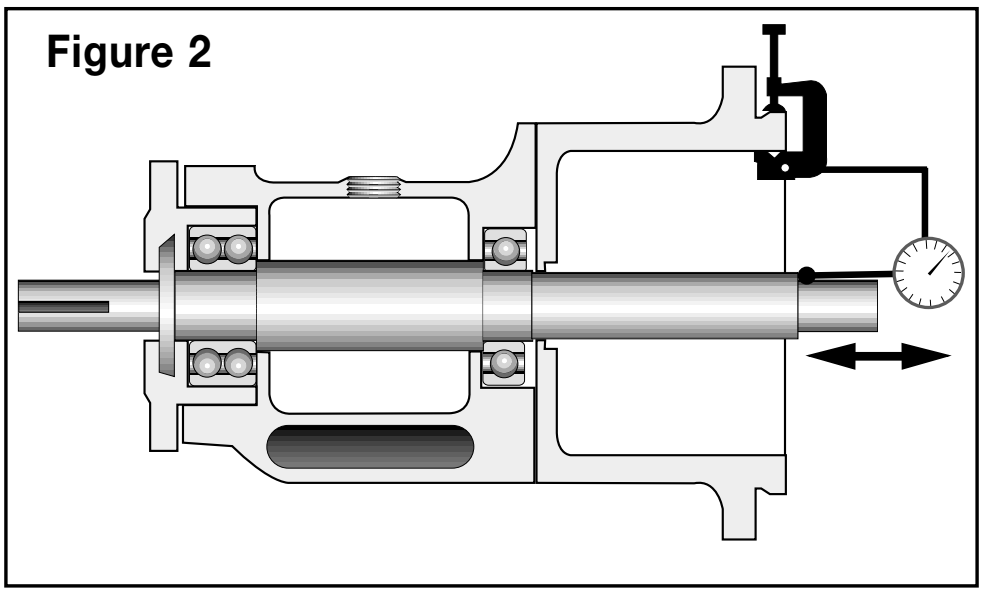

Radial shaft movement should be checked against the equipment manufacturer's specifications. Generally 0,05 - 0,10 mm (.002 - .004”) will be applicable for ball or roller type bearings. For sleeve or journal type bearings, values will generally be in the order of 0,10 - 0,15 mm (.004” - 0.006”). See figure 3.

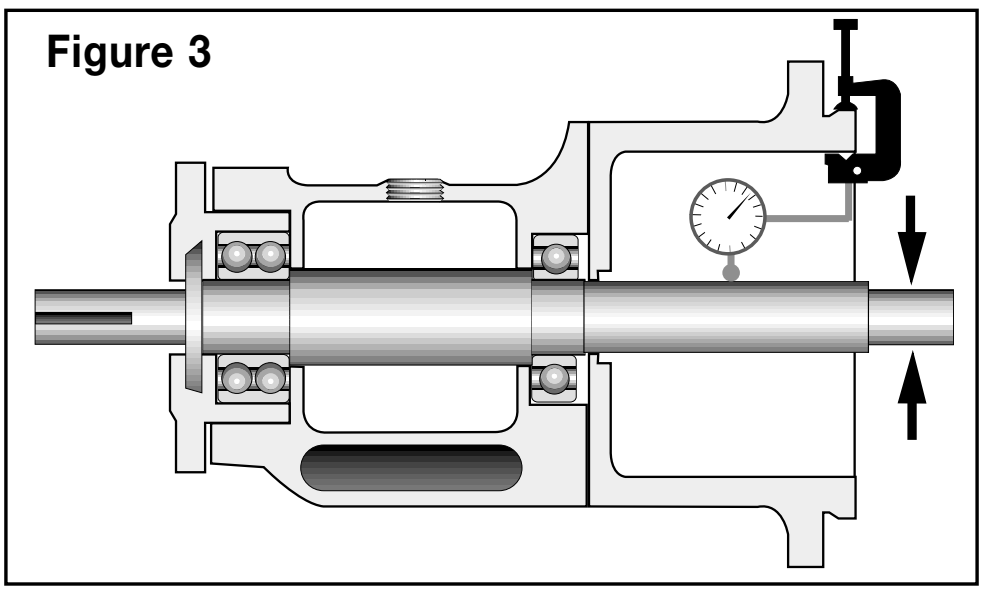

Seal chamber squareness to the shaft centreline should be within 0,015 mm per 25 mm seal chamber bore (.0005" per 1" seal chamber bore).
Note: make sure that shaft endplay does not affect the reading. Verify the smoothness of the seal chamber face for a good gasket joint.
See figure 4.

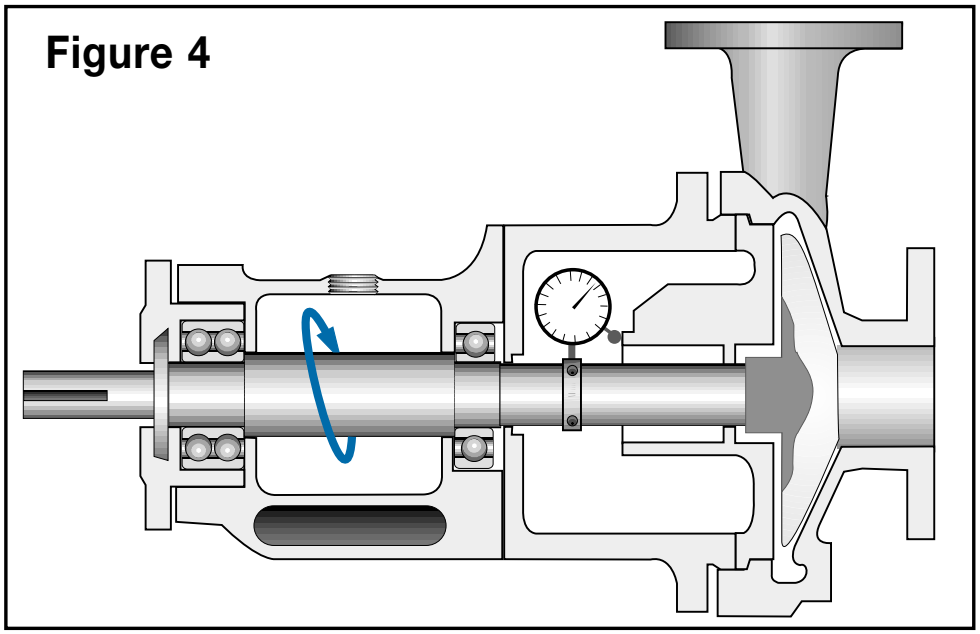

Concentricity of the shaft to the seal chamber bore should be within 0,025 mm per 25 mm shaft diameter (0.001" per 1" shaft diameter) to a maximum of 0,125 mm (0.005") TIR.
See figure 5.

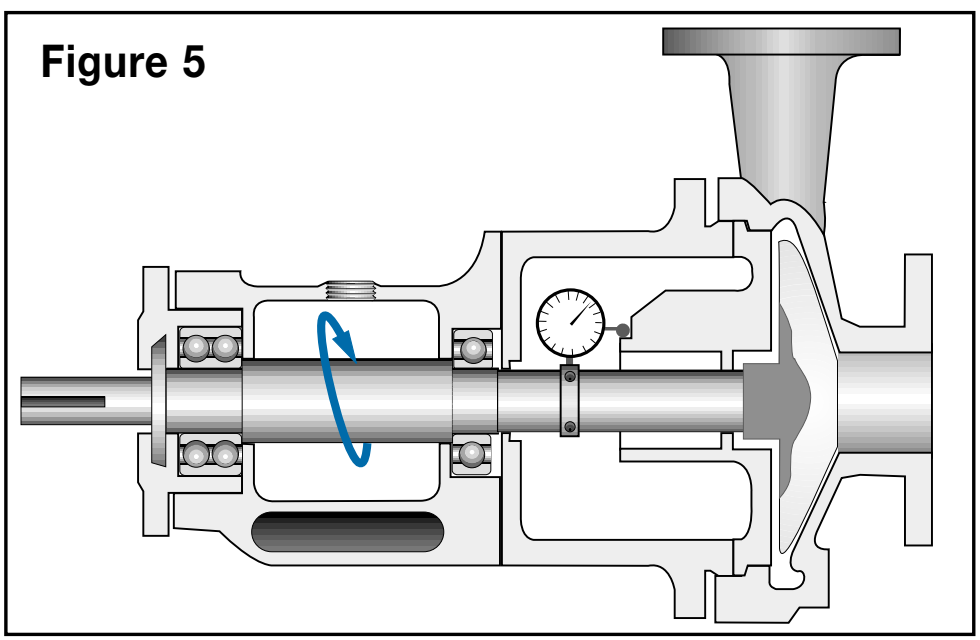

Break all sharp corners on shaft steps, threads, reliefs, shoulders, key ways, etc. over which gasket(s) must pass and/or seal against.

6. Mechanical Seal Installation

Correct seal setting is important in the successful operation of a mechanical seal. Cartridge seals unitize the complete seal assembly on a sleeve such that the entire seal is installed simultaneously. Component seals are assembled sequentially on the equipment and require careful measurements to properly locate and lock the rotating components relative to the stationary components. When measuring the setting or securing cartridge seals, always make sure the shaft is in the same position as when the equipment is operating (e.g. including the effects of thermal growth or contraction of the shaft relative to the casing).

To ease installation, gaskets may be lightly lubricated.
Lubricant must be compatible with both handled product and gasket material. Generally, silicon grease is suitable but this should be verified before applying.

Caution: avoid over compressing a bellows. This could result in reduced spring force and length.

6.1 Installation of Cartridge Type Seal with Setting Plates.

See figure 6

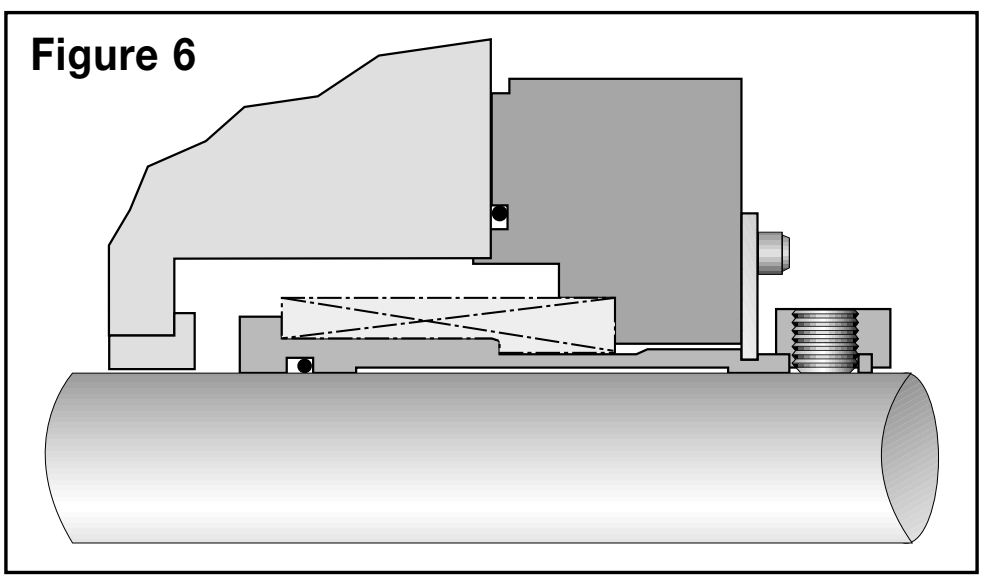

6.1.1 Check assembly drawing and seal assembly prior to installation.
6.1.2 Install the seal onto the shaft and locate against the face of the seal chamber.

6.1.3 Orient the ports on the seal flange(s) as indicated by the seal assembly drawing and connecting piping.

6.1.4 Evenly torque gland bolts/nuts to prevent cocking of the gland or uneven flange pressure against the seal chamber. Do not tighten drive arrangement screws.

6.1.5 Complete the remaining equipment assembly including thrust bearings, if applicable.

6.1.6 Ensure the setting plates are correctly located and engaged.

6.1.7 Tighten drive arrangement screws to the torque values shown on the seal assembly drawing.

6.1.8 Disengage setting plates from the sleeve and secure tightly in disengaged position.

6.1.9 Inspect equipment and driver alignment in accordance with coupling and / or equipment manufacturer's instructions.

6.1.10 After bringing the unit up to operating conditions (pressure and temperature), recheck pump to driver alignment.
Make adjustments as necessary.

6.2 Installation of a Cartridge Type Seal with Centring Tabs.

See figure 7

Figure 7

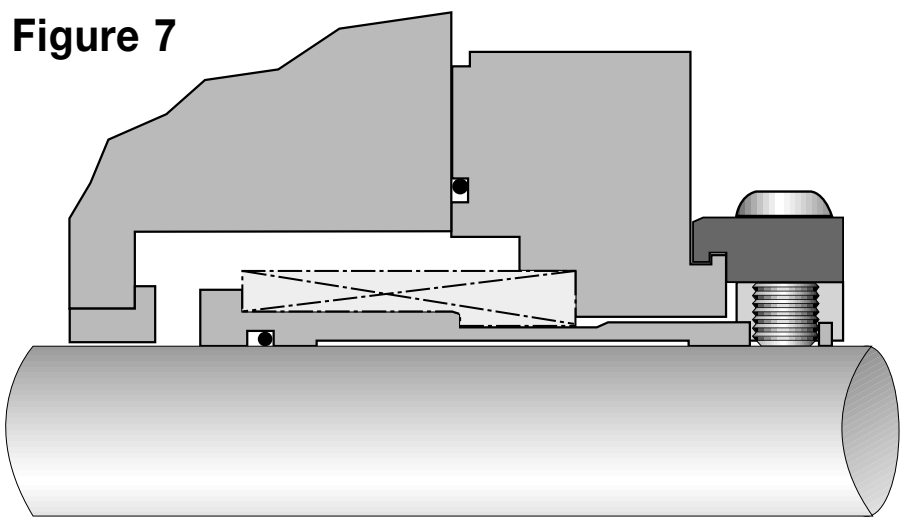

6.2.1 Check assembly drawing and seal assembly prior to installation.

6.2.2 Install the seal onto the shaft and locate against the face of the seal chamber.

6.2.3 Orient the connections on the seal flange(s) as indicated by the seal assembly drawing and connecting piping.

6.2.4 Install flange bolts/nuts, but do not tighten. The flange must be free to move radially.

6.2.5 Complete the remaining equipment assembly including thrust bearings, if applicable.

6.2.6 Ensure the centring tabs are correctly located and engaged.

6.2.7 Evenly torque flange bolts/nuts to prevent cocking of the flange or uneven flange pressure against the seal chamber.

6.2.8 Tighten drive arrangement screws to the torque values shown on the seal assembly drawing.

6.2.9 Remove centring tabs and store them in a known place.

6.2.10 Inspect equipment and driver alignment in accordance with coupling and / or equipment manufacturer's instructions.

6.2.11 After bringing the unit up to operating conditions (pressure and temperature), recheck pump to driver alignment. Make adjustments as necessary.

6.3 Installation of a Component Type Seal. See figure 8

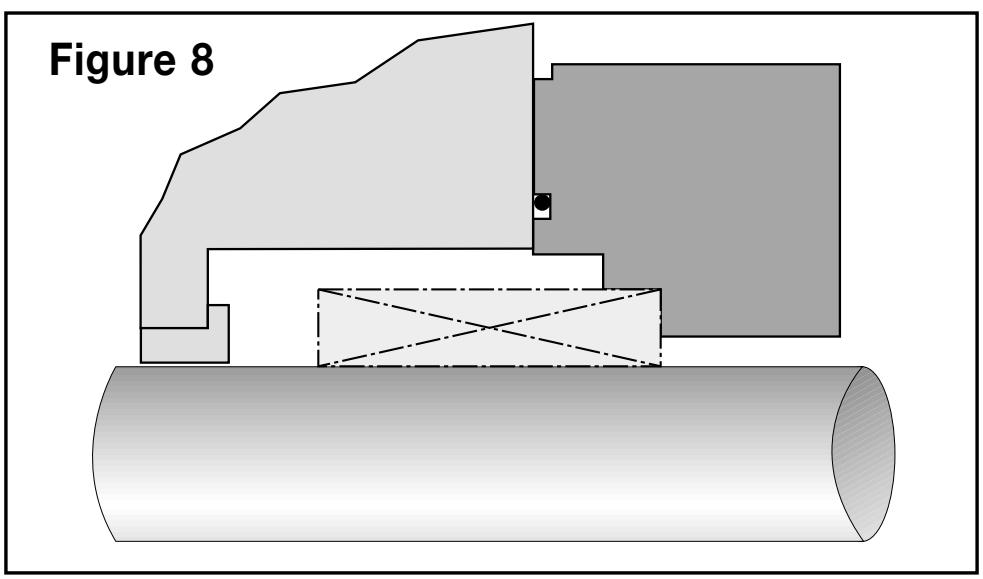

6.3.1 Check assembly drawing and seal components prior to installation. Ensure seal faces and joints are free of scratches, contamination and

other damage. Prior to installation, wipe lapped surfaces clean with a lint free cloth and quick drying solvent. Lubrication of seal faces is not recommended unless specified on the seal assembly drawing.

6.3.2 Assemble seal chamber and shaft (including thrust bearings, if applicable) and verify/scribe the seal setting distance as shown on the assembly drawing. Other setting aids such as spacer rings may be indicated on the assembly drawing.

6.3.3 When applicable, pre-assemble the rotating and stationary components or sub-components of the seal in accordance with the assembly drawing.

6.3.4 Assemble the seal components sequentially onto the equipment, fastening the rotating components. Locate the flange(s) against the face of the seal chamber.

6.3.5 Orient the connections on the seal flange(s) as indicated on the seal assembly drawing.

6.3.6 Evenly torque flange bolts/nuts to prevent cocking of the flange or uneven flange pressure against the seal chamber.

6.3.7 Complete the remaining equipment assembly including thrust bearings, if applicable.

6.3.8 Inspect equipment and driver alignment in accordance with coupling and / or equipment manufacturer's instructions.

6.3.9 After bringing the unit up to operating conditions (pressure and temperature), recheck pump to driver alignment. Make adjustments as necessary.

6.4 Installation of Seals with Hooked Type Sleeves (overhung pumps).

See figure 9

6.4.1 Check assembly drawing and seal components prior to installation. Ensure seal faces and joints are free of scratches, contamination and other damage. Prior to installation, wipe lapped surfaces clean with a lint free cloth and quick drying solvent. Lubrication of seal faces is not recommended unless specified on the seal assembly drawing.

6.4.2 Assemble seal chamber and shaft (including thrust bearings, if applicable) and verify the distance from the seal chamber face to

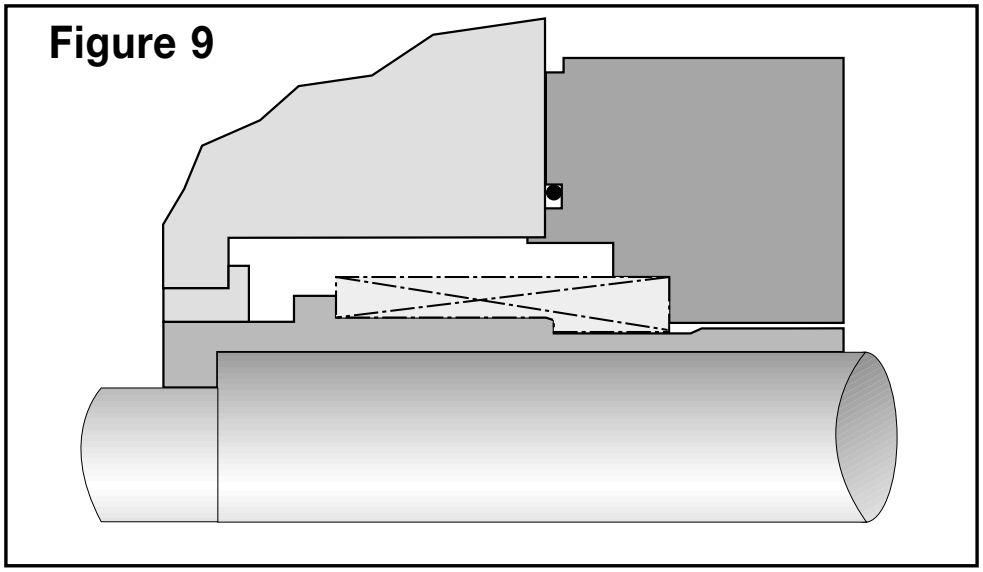

the end of the shaft as shown on the assembly drawing.

6.4.3 When applicable, pre-assemble the rotating and stationary components or sub-components of the seal in accordance with the assembly drawing.

6.4.4 Assemble the seal components sequentially onto the equipment. Locate the flange(s) against the face of the seal chamber. If applicable, install drive keys as indicated on the seal and/or pump assembly drawing.

6.4.5 Orient the connections on the seal flange(s) as indicated by the seal assembly drawing and connecting piping.

6.4.6 Evenly torque flange bolts/nuts to prevent cocking of the flange or uneven flange pressure against the seal chamber.

6.4.7 After the impeller nut is properly torqued, check that the sleeve is completely seated

6.4.8 Complete the remaining equipment assembly including thrust bearings, if applicable.

6.4.9 Inspect equipment and driver alignment in accordance with coupling and / or equipment manufacturer's instructions.

6.4.10 After bringing the unit up to operating conditions (pressure and temperature), recheck pump to driver alignment. Make adjustments as necessary.

7. Piping Instructions

Piping instructions are detailed on the mechanical seal assembly drawing. These instructions must be followed precisely to ensure correct seal operation. For auxiliary systems: carefully read the operating instructions provided with the system.

Minimize restrictions, especially in closed loop piping arrangements. Unless otherwise specified, the minimum internal diameter for pipe, tubing and connecting hardware should be 12,7 mm (.500”).

Total pipe length and number of bends should be kept to a minimum. Use smooth, large radius bends; do not use elbows, tees, etc. Orifices should be installed as far away from seal flange as possible. An exception to this rule should be made for orifices fitted to drain piping. To avoid clogging of the orifice it is advisable to install it in the seal flange so that the generated heat will serve to keep the leaked product fluid.

For “loop type” systems:
Pipe runs should be sloped continuously up or down to allow adequate circulation, proper venting and draining. Make sure that the loop, including seal flange, does not include vapor traps. Unless otherwise specified, reservoirs and coolers must be mounted 40 to 60 cm (15” to 24”) above the seal inlet or outlet connection, whichever is the highest, to promote thermosyphoning in standby condition.

Seals equipped with excess leakage detection:
Excess leakage detection, often used with single or non-pressurized dual seals, is commonly achieved by monitoring liquid level or pressure increases. With such an arrangement, the drain line for normal leakage must slope downward continuously to the point of exit (e.g. sump). Refer to the seal assembly drawing for additional piping requirements including the proper location of the restriction orifice and instrumentation.

8. Performance Testing of Pumps

Pump manufacturers will often perform pump performance tests on water with the mechanical seal installed. Some seal designs and face materials require special precautions to prevent damage to the seals during these tests.
For example, on seals with two hard faces, the seals may be provided with faces in alternate materials more suitable for the pump test medium. These faces are to be replaced with faces in the selected materials at the conclusion of the testing.

When high temperature seals with graphoil gaskets are tested on water during a pump performance test, the seals must be carefully dried after the test to prevent vaporization of water absorbed by the gaskets when the pump is brought to its (high) operating temperature.

Contact your Flowserve representative for additional information.

9. Operational Recommendations

9.1 The pressure and temperature in the seal chamber or of the barrier fluid must not exceed the recommended maximum seal limits. The shaft speed must also not exceed the seal's limits.

9.2 For seals using external cooling and/or an external flush, apply cooling and / or flush prior to seal start-up.

9.3 Single and dual non-pressurized (tandem) seals require adequate vapor pressure margin in the seal chamber to prevent flashing of the product at the seal faces.

9.4 Dual non-pressurized (tandem) seals require the buffer fluid pressure to be maintained at a value lower than the seal chamber pressure.
Buffer fluid pressure is usually equal to atmospheric or vapor recovery system pressure, unless otherwise specified.

9.5 Dual pressurized (double) seals require the barrier fluid pressure to be maintained at least 2 bar 30 psi) above the seal chamber pressure, unless otherwise specified. It is imperative to pressurize the barrier prior to pressurizing the equipment. Likewise, do not de-pressurize the barrier system until the equipment has been fully isolated, depressurized and vented.

9.6 If dual non-pressurized (tandem) seals are operated on a non volatile product, the primary seal leakage will not evaporate, resulting in contamination of the buffer fluid. Because the level in the reservoir will rise over time, periodically drain the reservoir to the "safe minimum level" as indicated on the reservoir or instructions and refill with fresh buffer fluid.

9.7 Flowserve can supply information on barrier fluid temperature and flow requirements based on product type, seal size, product temperature, barrier fluid characteristics and shaft speed.
Ensure that the barrier fluid is clean and compatible with the product.

9.8 This seal is designed to resist corrosion by the product(s) listed on the assembly drawing. Do not expose the seal materials to products other than those shown on the assembly drawing. The seal assembly drawing lists the materials of construction. Consult your Flowserve representative when in doubt or when using the seal for another application than for which it was selected.

9.9 Do not start the equipment dry (unless the seal is designed to operate in a gas). Open valves to flood equipment with product. Vent all air and/or product vapor from the equipment casing and the seal chamber before start up. Vent casing and tubing of heat exchange (if applicable). Process fluid must flood and pressurize the seal chamber at all times for single seal and non-pressurized dual seals. Barrier fluid must flood dual seals at all times during equipment operation.

9.10 Dual seals may be pressurized by means of a piston type pressure transmitter. Do not completely fill the transmitter at the time the equipment is taken into service. Always allow room for the piston to move downward (toward the “full” position) to avoid over pressurizing the seals. When the transmitter is filled to the limit, the piston will “bottom out” thus

creating a “ridged system”. Heat conducted from the equipment and/or generated at the faces will cause a rise in temperature of the barrier fluid causing it to expand. Failure to comply can result in pressures way beyond the capability of the seal(s).

9.11 When required, dry steam should be applied to the quench connection. Use a needle valve (or other flow restriction) to provide 0.1 bar (1 to 1.5 psi) steam to the quench connection on the seal flange. This should result in wisps of steam exiting the seal flange area. Ensure that all condensate is drained from the supply line and open the steam quench slowly before the pump is preheated to prevent thermal shock.

9.12 Start up equipment in accordance with normal operating procedures unless specifically requested otherwise by Flowserve.

If the equipment is not operating properly (e.g. seals and/or bearings running hot, cavitation, heavy vibration, etc.), shut down the equipment, investigate and remove the cause.

10. Shut down, disassembly

The equipment can be shut down at any time. Before the mechanical seal can be removed the equipment and de-pressurized. Barrier pressure (if applicable) must be relieved after the equipment has been de-pressurized.

Product may be released during removal of the mechanical seal. Safety measures and protective clothing may be required as per the plant’s safety regulations.

Further disassembly of the mechanical seal must be done according to the supplier’s specifications.

11. System check

Checking of the system, limits itself to monitoring pressure, temperature, leakage and consumption of barrier (buffer) fluid, when applicable.

12. Spare parts, repairs

This mechanical seal is designed to provide reliable operation under a wide range of operating conditions. However, repairs will be necessary when the seal reaches the end of its normal life expectancy or when it has been operated outside of its design capabilities.

This product is a precision sealing device. The design and dimensional tolerances are critical to seal performance. Only parts supplied by Flowserve should be used to repair this seal. These are available from the numerous Flowserve stocking locations.
To order replacement parts, refer to the part code, order number or B / M number, which can be found on the assembly drawing.
It is recommended to keep a spare seal on stock to reduce equipment downtime.

All liabilities and warranties to Flowserve for damage incurred through the use of non-original replacement parts and accessories will be rendered null and void.

Please note that special manufacturing and delivery specifications exist for all parts of our products manufactured or produced by ourselves and the replacement parts are always offered in accordance with the latest technology and with the most current regulations and laws.

Flowserve seals can normally be reconditioned. When repair is necessary, the seal should be carefully removed from the equipment (reinstall the centring tabs or setting plates if applicable).

Decontaminate the seal assembly and return it to a Flowserve authorized repair facility with an order marked “Repair or Replace”. A signed certificate of decontamination must be attached.

A Material Safety Data Sheet (MSDS) must be enclosed for any product that came in contact with the seal. The seal assembly will be inspected and, if repairable, a quotation will be made for restoring it to its original condition. Upon acceptance of the quotation, the parts will be rebuilt, tested, and returned to sender.

The information and specifications presented in this product brochure are believed to be accurate, but are supplied for information purposes only and should not be considered certified or as a guarantee of satisfactory results by reliance thereon. Nothing contained herein is to be construed as a warranty or guarantee, express or implied, with respect to the product. Although Flowserve Corporation can provide general application guidelines, it cannot provide specific information for all possible applications.
The purchaser/user must therefore assume the ultimate responsibility for the proper selection, installation, operation and maintenance of Flowserve products. Because Flowserve Corporation is continually improving and upgrading its product design, the specifications, dimensions and information contained herein are subject to change without notice.

FLOWSERVE®

Flow Solutions Division

MAJOR EUROPE, AFRICA & MIDDLE EAST CONTACTS

AUSTRIA, Sieghartskirchen, (43) 2274-6991. **BELGIUM,** Antwerpen, (32) 3-5460450. **DENMARK,** Allerød, (45) 48 176500. **FRANCE,** Courtaboeuf, (33) 1-69592400, Martigues,(33) 4-42-130270. **GERMANY,** Dortmund, (49) 231-6964-0. **ITALY,** Cormano (Milano), (39) 02-61558.1, Sicily, (39) 0931-994-770. **KINGDOM OF SAUDI ARABIA**, Al Khobar, (966) 3-857-3150. **THE NETHERLANDS,** Roosendaal, (31) 165-581 400. **POLAND,** Katowice, (48) 32-252-8944, Warszawa, (48) 22-844-7108. **RUSSIA,** Moscow, (7) 095-737 0184. **SWEDEN,** Göteborg, (46) 705 24 7181. **SPAIN,** Tarragona, (34) 977-544400. **SWITZERLAND,** Oensingen, (41) 62-3883088. **UNITED ARAB EMIRATES (U.A.E.),** Abu Dhabi, (971) 2-317141. **UNITED KINGDOM,** Manchester, (44) 161-8691200.

WORLDWIDE HEADQUARTERS

UNITED STATES OF AMERICA 222 West Las, Colinas Blvd, Suite 1500 Irving, TX 75039 Dallas (1) 972-443-6500.

FIS 144 EUR
ORG 402 EUR

www.flowserve.com

949262 REV: A

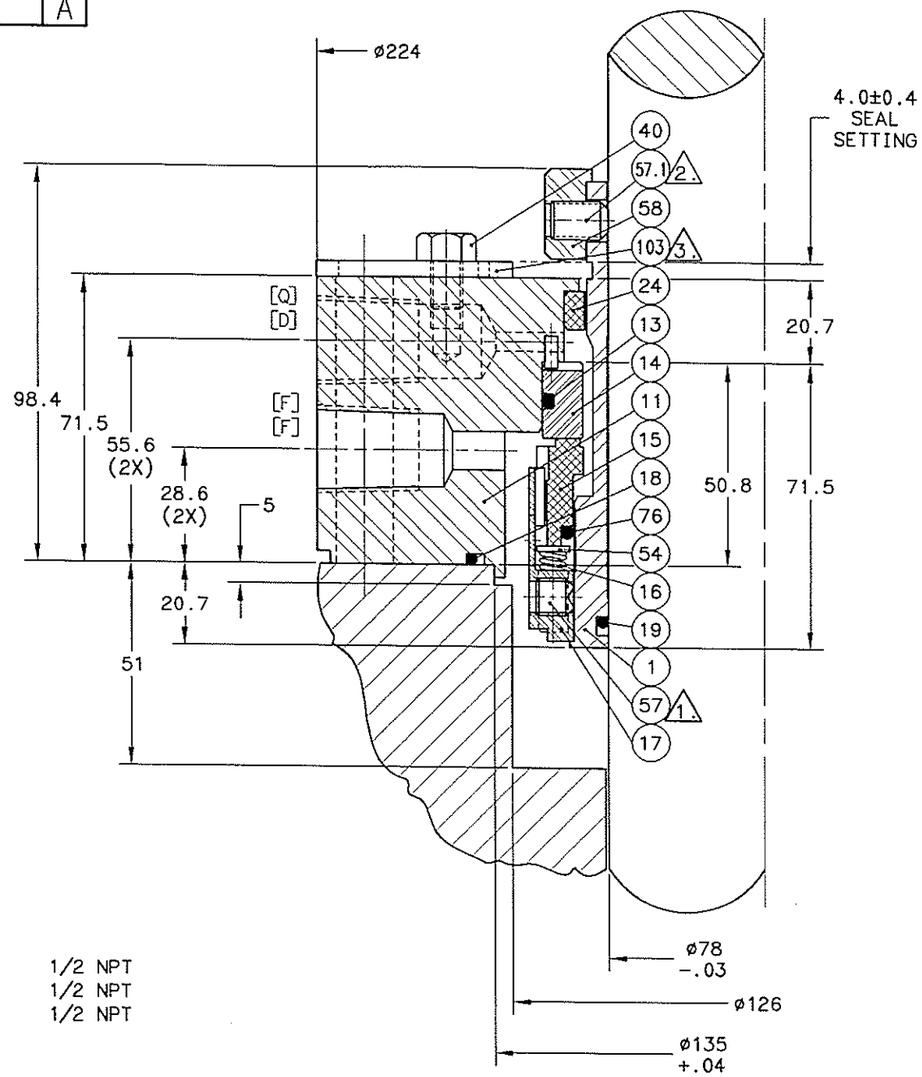

2X [F] FLUSH 1/2 NPT
[Q] QUENCH 1/2 NPT
[D] DRAIN 1/2 NPT

1. TIGHTEN SETSCREWS EQUALLY, IN 4 STEPS. FINAL TORQUE: 8.5 Nm. SECURE AT ASSEMBLY.
2. TIGHTEN SETSCREWS EQUALLY, CROSSWISE, IN 4 STEPS. FINAL TORQUE: 33 Nm.
3. DISENGAGE SETTING PLATES BEFORE START-UP.
4. FOR INSTALLATION AND OPERATING INSTRUCTIONS SEE SEPARATE MANUAL.

THIRD ANGLE | END VIEW REDUCED SCALE: | ROTATION

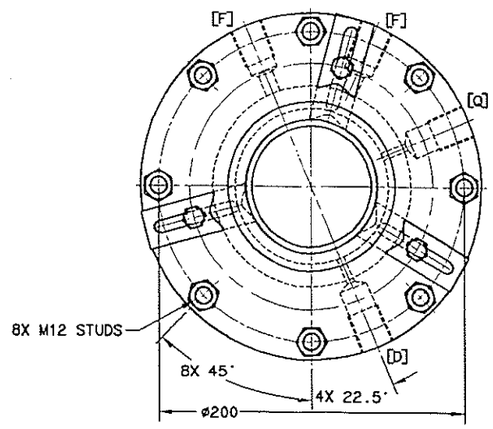

BILL OF MATERIAL NO: 949262-001 | •SUGGESTED SPARE PARTS

(NO)	PART NUMBER	CODE	QTY	DESCRIPTION	MATERIAL	•	BSC	STD
1	2N40945	DB	1	SHAFT SLEEVE	316			
11	2N40946	DB	1	FLANGE	316			
13	568243	GU	1	GASKET	FLUOROELASTOMER	*		
14	668871	SL	1	SEAL FACE	SILICON CARBIDE	*		
15	154808	RY	1	SEAL FACE	CARBON	*		
16	668838	NL	8	COIL SPRING	ALLOY C-276	*		
17	154810	DB	1	SPRINGHOLDER	316			
18	568255	GU	1	GASKET	FLUOROELASTOMER	*		
19	568235	GU	1	GASKET	FLUOROELASTOMER	*		
24	670051	GE	1	FLANGE BUSHING	CARBON			
40	4N02099	CK	3	CAP SCREW	18-8			
54	668884	DB	1	RETAINING RING	316			
57	4R0437	DB	4	SET SCREW	316	*		
57.1	4R14354	CI	6	SET SCREW	ALLOY STEEL	*		
58	666927	DB	1	DRIVE COLLAR	316			
76	568240	GU	1	GASKET	FLUOROELASTOMER	*		
103	4R15130	DB	3	SETTING PLATE	316			

FINAL DRAWING
RELEASE TO MANUFACTURING
NO FURTHER CHANGES SHALL BE MADE BY THE VENDOR OR THE BUYER
SIGNATURE : KShanmugavelu DATE : 06/10/2004
FLOWSERVE
Flow Solutions Division

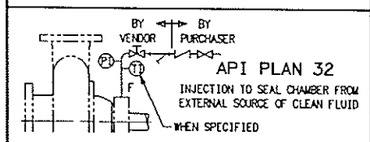

1. WHEN CONNECTING SEAL FLUSH TO OUTSIDE SOURCE, MAINTAIN PRESSURE AT LEAST 10 PSI [70 kPa] ABOVE SEAL CHAMBER PRESSURE AT STATED FLOW RATE.
2. MAINTAIN SEAL CHAMBER PRESSURE 50 PSI [344 kPa] OR MORE ABOVE PRODUCT VAPOR PRESSURE AT PUMP OPERATING CONDITIONS TO PREVENT FLASHING AT SEAL FACES.
3. INSTALL FLOW CONTROL ORIFICE AS FAR AS POSSIBLE FROM FLUSH PORT.

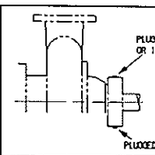

API PLAN 61
TAPPED CONNECTIONS FOR PURCHASER'S USE.

PIPING REQUIREMENTS

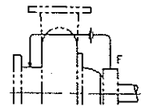

API PLAN 13
RECIRCULATION FROM SEAL CHAMBER THROUGH FLOW CONTROL ORIFICE AND BACK TO PUMP SUCTION
(ORIFICE DIA = 3 MM)
MAINTAIN SEAL CHAMBER PRESSURE 50 PSI [344 kPa] OR MORE ABOVE PRODUCT VAPOR PRESSURE AT PUMP OPERATING CONDITIONS TO PREVENT FLASHING AT SEAL FACES.

FLUSH (INJECTION) RATE: 5.2 GPM [19.5LPM]

PIPING REQUIREMENTS

CUSTOMER: FLOWSERVE FPD COSLADA
ADDRESS: COSLADA (MADRID) SPAIN
ULTIMATE USER: LAVRION
CUSTOMER P.O.: HEL-008160
PRODUCT: CONDENSATE
TEMP: 27-68°C
SPEC GRAVITY: 0.997
SEAL CHAMBER PRES: 21.1 BARG NORM / 16.3-23.0 BARG

FLUSH (INJECTION) RATE: 5.2 GPM [19.5LPM]

PIPING REQUIREMENTS

SUCT PRES: 0.02 BARG
DISCH PRES: 21.1 BARG NORM / 16.3-23.0 BARG
RPM: 1480
API PLAN: 13/32/61
API CODE: BSTFN
OEM PROJECT NO: 11951
EQUIP ITEM NO:
EQUIP SERIAL NO:

SEAL TYPE: QB | SEAL SIZE: 3.750
SEAL CONFIG: SINGLE INSIDE-CARTRIDGE | SIZE CODE:
MATL CODE: 5U4X | WEIGHT:
EQUIP MFR: FLOWSERVE FPD COSLADA (SPAIN) | INSTR:
EQUIP MODEL: 243APKD-4 / VER.
EQUIP DWG: | DESIGN:

FLOWSERVE
Flow Solutions Division

SCALE: FULL SCALE	OPTIONS:	
DRAWN: JPALANI	REF DWG: 949299	
DATE: 16-SEP-2004	FORM DWG: A2N40943	REV:-
CHKD: RRAMANATHAN	ASSY/ORDER NO: SHEET: 1 OF: 1	REV:
APPVD:	949262	A
F.O. NO: 949262		

REVISION: A | DATE: 06-OCT-2004 | BY: KSHANMUGAVELU | CHKD: SSRINIVASAN | ECN NO:
REVISION NOTE: FINALIZED.

DIM'S ARE REF UNLESS SPECIFIED OTHERWISE. DIM'S IN: MILLIMETERS | C/A2 FEB 2000

Coupling Manual

The crowned tooth gear couplings type HAV, MSVS and MTV, specially designed for vertical mounting, basically consists of:

Pos. 1-Hub.
2-Sleeve.
3-O-Ring.
4-O-Ring.
5-Bolt.
6-Self-locking Nut.
7-Support plate.
8-Oil plug.
9-Pivot.

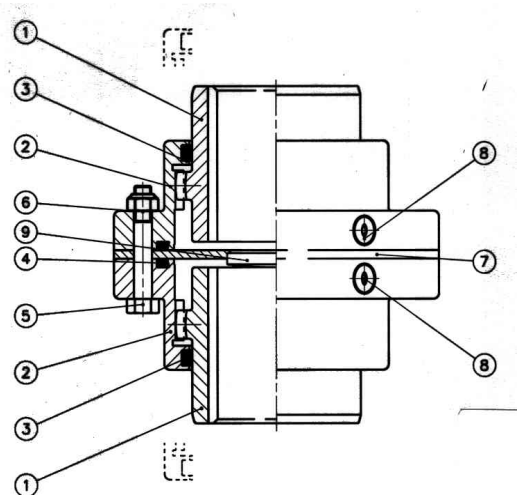

INSTALLATION

- Parts forming the coupling shall be cleaned carefully before mounting. This shall be applied to teeth specially.
- Place the sleeves on the shafts.
- Insert hubs on shafts. To help mounting slightly grease with molibden bisulfure on cleaned seats.
- Hubs can be mounted by pressing, heating with burner or preferably in an oil bath not above 100ºC.
- With support plate outside, place shaft ends with the gap “a” according the figure. Gap “a” must be taken from tables bellow according the type and size of coupling.
- Procede to shafts alignment performed by means of a straight edge and a thickness gauge, or using an inside caliper, as in the figure. An accurate alignment result is obtained using a dial indicator.
- Insert center support plate within the gap “a”. Do not forget that crowned pivot must be in contact with lower shaft end.

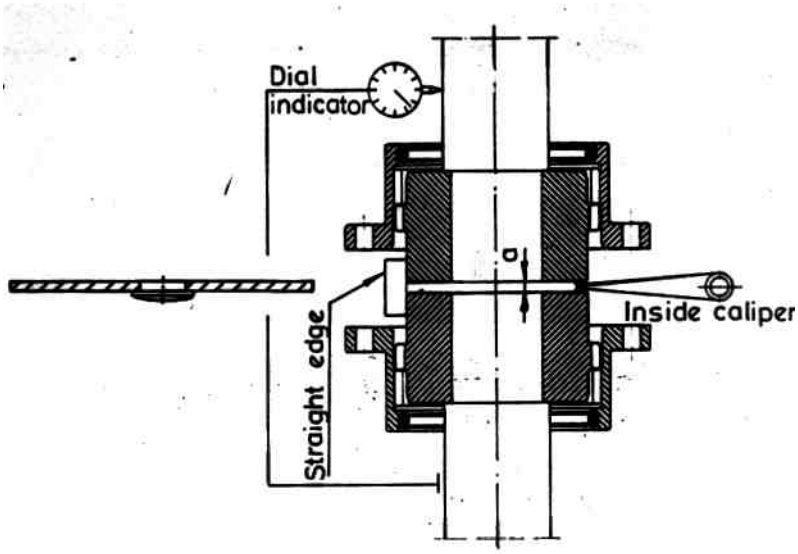

LUBRICATION

Once the coupling is mounted, it must be filled with a lubricant from table below or equivalent.
There a two oil plugs per each half for the lubrication, Pos.8.
¡Remark! Take care to fill in the lubricant in both half couplings as they are separated by the central support plate Pos.7.
Make sure that upper half coupling is completely fill with grease. Bottom half coupling must be filled with the quantity according to the table.

Remove and change the grease every 3.000 hours.

Recommended Lubricants & Quantity

Normal Speed And Duty		Normal Speed and Heavy Duty Service	
Amoco	Amoco coupling grease	Klüber	Klüberplex Ge 11-680
Castrol-Tribol	Tribol 3020/1000-1	Texaco	Coupling grease KP 0/1 K-30
Cepsa-Krafft	KEP 1		
Esso-Exxon	Unirex RS 460, Pen-0- Led EP	**HIGH SPEED[1]**	
Fina	Ceran Ep-0		
Klüber	Klüberplex GE 11-680	Amoco	
Mobil	Mobilgrease XTC,	Esso-Exxon	Coupling grease
	Mobiltemp SHC 460 spezial	Klüber	Unirex RS-460
Shell	Albida GC1	Mobil	Klüberplex Ge 11-680
Texaco	Coupling grease KP 0/1 K-30	Texaco	Mobilgrease XTC
Verkol	Verkol 320-1 Grado 1		Coupling grease KP 0/1 K-30

[1] High speed is considered for peripheral velocity above 80 metros/second.

For working temperatures out of this range please consult.

Indicated lubricant quantity is for each coupling hub

COUPLING HAV												
Size	10	15	20	25	30	35	40	45	50	55	60	70
“a” mm.	6	6	6	8	8	11	11	13	13	14	14	18
Lubricant Quantity (Kg)	0.02	0.03	0.085	0.12	0.18	0.25	0.35	0.65	0.875	1.1	1.4	2.25

COUPLING MSVS													
Size	5	10	20	35	60	105	150	210	325	430	600	800	1150
“a” mm.	6	6	6	8	8	8	10	10	10	12	12	12	16
Lubricant Quantity (Kg)	0.035	0.05	0.06	0.11	0.15	0.20	0.30	0.50	0.56	0.82	1	0.62	1

COUPLING MTV												
Size	42	55	70	90	100	125	145	165	185	205	230	260
“a” mm.	8	8	8	9	9	12	13	14	14	16	16	16
Lubricant Quantity (Kg)	0.02	0.03	0.085	0.12	0.18	0.25	0.35	0.65	0.875	1.1	1.4	2.25

JAURE, S.A. ERNIO BIDEA, S/N 20150 ZIZURKIL (Guipúzcoa) - SPAIN
Tel: (+34) 943 690054 Fax: (+34) 943 690295
E-mail: Dpto.Comerical: sales.dep@jaure.com **Dpto.Técnico:** tech.dep@jaure.com **WEB : http://** www.jaure.com

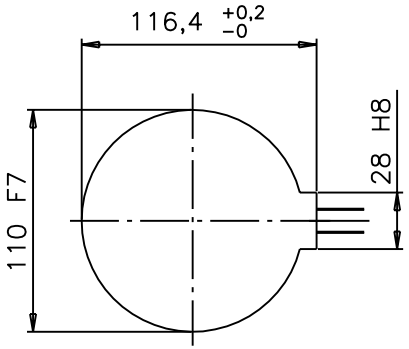

MOTOR SIDE

VIEW "A"

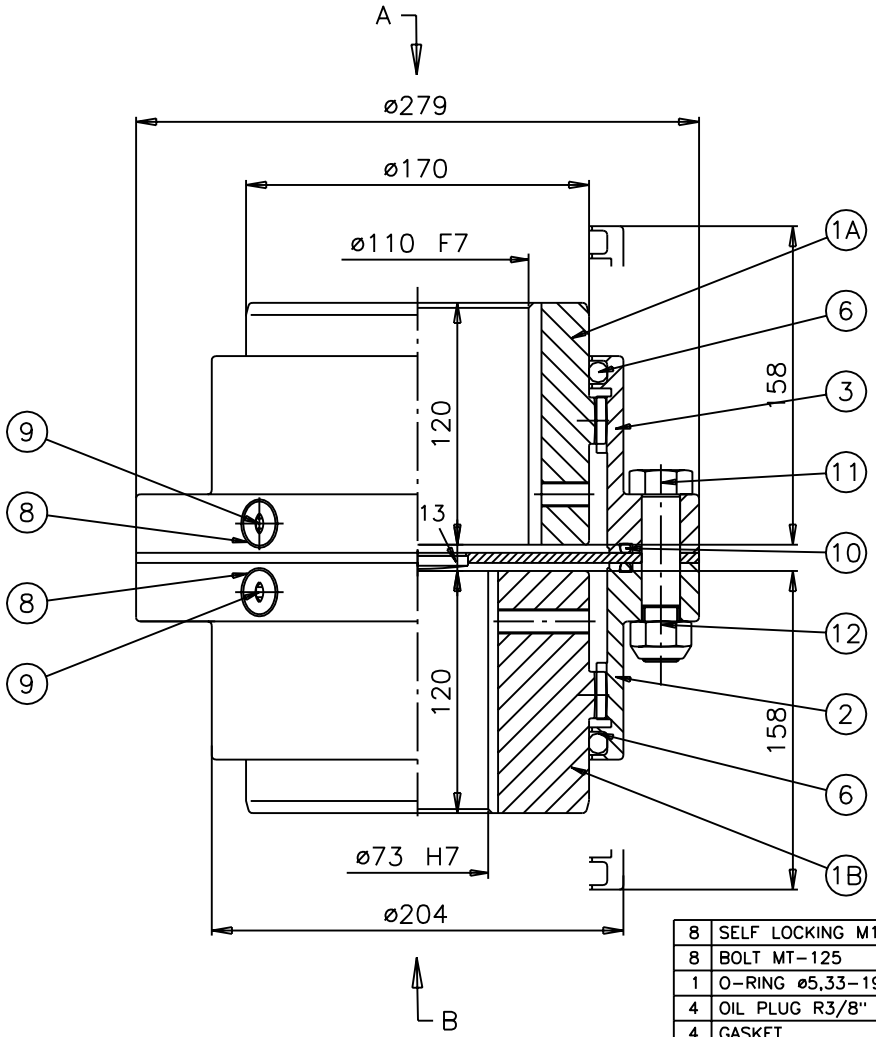

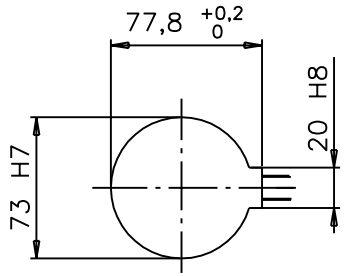

PUMP SIDE

VIEW "B"

REF.10.07.50.10896
PUMP 243 APKD-4
REQ. RTA 10896

PUMP NOMINAL POWER 406 KW
SPEED 1480 rpm
FACTOR 6
NOMINAL TORQUE OF COUPLING (Nm): 17200
MAX. SPEED (r.p.m.): 3600
WEIGHT (Kg): 65
MOMENT OF INERTIA (J) = 0,48 $Kg\,m^2$
TIGHTENING TORQUE (Nm): 230
TORSIONAL STIFFNESS (Nm/rad): $23{,}21 \times 10^6$

LUBRICATION:
QUANTITY OF GREASE:
UPPER SIDE (MOTOR SIDE 0,5 Kg
BOTTON SIDE (PUMP SIDE) 0,32 Kg
TYPE OF GREASE (ACCORDING TO SHEET 1610-M)

N.	DENOMINACION	Marca	Dibujo N.	Material	Modelo	Peso(Kg)
8	SELF LOCKING M18	12		8	DIN-985	
8	BOLT MT-125	11		8.8		
1	O-RING ø5,33-196,22	10		NBR		
4	OIL PLUG R3/8"	9			DIN-908	
4	GASKET	8			DIN-7603	
2	O-RING ø10-168,5	6		NBR		
1	SLEEVE	3		F-114		
1	SLEEVE	2		F-114		
1	HUB	1B		F-115		
1	HUB	1A		F-115		

Fecha -
Modificaciones -
Rev. -

Nº de oferta: –
Nº de pedido: –

	Fecha	Nombre
Dibujado	21-09-04	MIKEL
Revisado y Aprobado	21-09-04	JON

JAURE,S.A.
ZIZURKIL (GUIPUZCOA)

UNE-EN-ISO 9001
EMPRESA CERTIFICADA

Escala:	Material:	Tratamiento:	Peso(Kg):	Nºde pieza:	Nºde PLANO:	REV.
–	–	–	–	–	OF-14923	

Nombre de la pieza: –
Nombre del conjunto: COUPLING MTV-125
Sustituye a –
Sustituido por –

Motor
Manual

TECO Westinghouse

TECO ELECTRIC EUROPE LIMITED

Installation and Maintenance Instructions for Induction Motors

Up to 600kW

Installation and Maintenance Instructions

TECO Induction Motors up to 600kW

BEFORE INSTALLATION & USE

1. Ensure nameplate data corresponds with your requirements
2. Ensure the motor is undamaged
3. Remove any shaft clamp (but refit prior to transportation)
4. Slowly rotate the shaft to ensure free movement
5. Ensure the mounting/shaft orientation design and drain hole positions are correct for the application

WARNING

The following safety precautions must be observed:

1. Electric rotating machinery and electricity can cause serious or fatal injury if the motor is improperly installed, operated or maintained. Responsible personnel must be fully trained to understand the hazards to themselves and others before being involved in installing, operating, maintaining and decommissioning electric motors. European Union Safety information can be obtained from such as:
   BS4999; EN 60204-1; EN292; EN294

   IEE Wiring Regulations
   Particular industries and countries have further safety requirements. Refer to their trade & safety bodies, British Standards Institution, Dept of Trade & Industry, etc., for further information. For instance, in the USA, refer to NEMA MG2, the National Electrical Code, local safety requirements etc.

2. When servicing, all power sources to the motor and to the accessory devices should be de-energised and disconnected and all rotating parts at standstill.

3. Lifting means, such as eyebolts, on the motor are for lifting only the motor itself. Assemblies which are not part of the motor must be removed prior to using the motor lifting means. When more than one lifting means is provided on the motor, all must be used together, for instance by attaching a supporting chain to each, to share the load. Ensure that lifting means are fully attached to the motor before lifting.

4. Suitable ear protection must be worn near machinery emitting high audible noise to reduce the noise reaching the ear to a safe level.
   Expect sound pressure levels above 85dB at 1 metre from TECO model AEEB standard motors connected to a 50Hz supply as follows:
   2 pole - 37kW and above
   4 pole - 90kW and above

   Noise generally increases with frequency. Refer to TECO for noise levels at other poles and frequencies. Refer also for noise levels from other models and particular motors where for instance TECO have provided additional silencing.
   Refer to BS EN 60034-9:1994 for further information on noise from rotating electrical machines

5. Safety guards and other protective devices must neither be bypassed nor rendered inoperative.

6. The motor must be earthed. Refer to relevant standards such as EN60204-1, IEE Wiring Regulations etc.

7. A suitable enclosure must be provided for the motor to prevent access to moving parts. Extra caution should be observed around a motor that is automatically started or has automatic resetting relays or is remotely started in case such starting means has not been properly disabled and the motor starts unexpectedly.

8. Ensure all shaft keys present on moving parts are fully captive before the motor is started.

9. Ensure adequate safeguards have been made to protect against the consequences of a brake failure, particularly on applications involving overhauling loads.

10. TECO UL listed explosion proof motors must only be used in countries where the UL certification is recognised as being appropriate for the application. They are constructed to comply with the label service procedure manual and any repairs to them must be made by TECO or a UL listed service centre in order to maintain the UL listing.

11. When using a motor in a variable speed application ensure that it will not be driven above its safe maximum speed limit. Consult TECO if in doubt. Also ensure the motor is not overloaded: It should be remembered that as speed reduces, fans driven by the main shaft do not provide as much cooling air and an auxiliary fan may be required.

12. Protect the motor from overload, preferably by monitoring the winding temperature. TECO can fit thermistors to give indication that the winding is getting too hot and the thermistors can be connected to switchgear that will automatically trip on the signal from the thermistors.

13. Capacitors such as in single phase motors may remain charged even when isolated from the mains supply. Discharge capacitors and earth their terminals before handling any connections.

LOCATION

1. Drip proof motors are intended for use where the atmosphere is relatively clean, dry, well ventilated and non-corrosive. Refer to BS 4999 Part 105 for more detailed information on suitability of a particular enclosure rating.

2. Totally-enclosed motors may be installed where dirt, moisture or dust are present and in outdoor locations. Refer to BS 4999 Part 105 for more detailed information on suitability of a particular enclosure rating.

3. Explosion proof motors have many different categories because hazardous atmospheres can consist of many different gases which may or may not be present continuously. Individual countries/users can differ in their safety requirements so the suitability of an explosion proof motor for any particular hazardous location must be assessed against the standards and specifications in force for that location. They must not be used in hazardous locations unless it has been established that they do comply with the safety standards and specifications in force for that location.

4. Type N motors to BS 5000 : Part 16 have been designed to reduce the likelihood of sparking in normal operation and have surface temperature limitations. They may be acceptable in locations where an explosive gas-air mixture is not likely to occur in normal operation and if it occurs it will only exist for a short time. Before using any type N motor in such a location, ensure that safety standards and specifications in force for that location permit its use.

5. Chemical duty enclosed motors are designed for installation in locations where they may encounter corrosive substances and/or high moisture.

   Note: In all locations the surroundings must not obstruct the normal flow of ventilating air to and from the motor.

MOUNTING

1. Ensure the orientation of the frame is appropriate for the design of the motor. For instance, motors designed for B3 (horizontal shaft), may not be not be suitable without modification for V5 (vertical shaft) because any drain holes will be in the wrong position, additional fixings may be required to prevent the shaft sliding through the bearings and different bearings may be needed to withstand the thrust force.

   Drip proof motors may not be drip proof in the wrong orientation.

   Consult TECO to establish whether a motor may be safely used in an orientation different from that ordered.

2. Where the motor is to be subject to a high degree of vibration (such as on a vibrating screen), high humidity (typically above 95%), abnormal ambient temperature (typically outside the range -20 to +45oC), or high altitude (typically above 1000metre) ensure that the motor specification is appropriate.

3. When mounting the motor, ensure this is done securely using steel nuts and bolts through each of the fixing holes provided, fully tightened. Where the location is likely to cause rusting, such as in the presence of sea water, stainless steel fixing bolts may be an advantage. Where there is significant vibration, ensure there are shakeproof washers under the nuts.

4. Where the drain holes are to be left open, ensure they are guarded from access when the motor windings are connected to a power supply

5. With a directly-coupled load ensure the motor and load shafts are accurately aligned and use a flexible coupling between them. Mounting bolts must be carefully tightened to avoid alignment changes and the alignment rechecked to ensure it is correct when the bolts are fully tight.

6. With a side-coupled load, such as a belt or gear drive, ensure the side force on the shaft will not damage the motor. Consult TECO if in doubt.

POWER SUPPLY AND CONNECTIONS

1. Wiring of the motor and its controller, overload protection and earthing should be in accordance with the current edition of the IEE wiring regulations, EN60204 and all local safety requirements

2. Refer to the nameplate voltage and frequency to ensure the motor is correct for the power supply to which it is to be connected. Unless specified otherwise the motor may be assumed to be suitable for the nameplate voltage +/- 5% and nameplate frequency +/- 1%.

3. Connection diagrams for the motor are generally supplied with it, either on the nameplate, fixed to the motor or placed in the terminal box.

4. All TECO UL listed Explosion Proof motors have temperature limiting devices in the motor enclosure to help prevent excessive external surface temperature of the motor in accordance with UL standards. Terminals (P1, P2) of thermal protectors in these motors must be connected to the motor control equipment according to the connection diagram inside the terminal box. Note: these motors are not certified for use in hazardous areas in the European Union and must only be used in locations where the UL recognition is in force.

START UP

1. Initially, run the motor unloaded and establish that the rotation direction is as required. If not, **switch off and when rotation has stopped:**
   - if the motor is a three phase motor – interchange any two phases.
   - if the motor is a single phase motor – interchange the connections to the auxiliary winding circuit, leaving the connections to the main winding unchanged.

2. Then start the motor fully loaded. If it does not start quickly and run smoothly, switch off immediately and when rotation has stopped, isolate from the power supply and examine the assembly for mechanical faults or poor connections.

3. If there is excessive vibration it could be caused by poorly-aligned couplings, loose mounting bolts, lack of rigidity in the supports, transmitted vibration from adjacent machinery etc. Excessive vibration can lead to motor damage, for instance to the bearings making them noisy, and hence vibration should be minimised.

4. Ensure the current drawn is commensurate with that shown on the nameplate and that the currents in each phase are similar.

5. If a single phase motor does not start, this may be due to the internal starting switch not closing when the rotor is stationary or a faulty starting capacitor.

LONG TERM STORAGE AND HUMID ENVIRONMENTS

If the motor has been stored for an extensive period or subjected to adverse moisture conditions, ensure the insulation resistance is greater than 1MOhm before switching on. Also, regrease the bearings and if they are rusty, replace them.

When the insulation resistance is not greater than 1MOhm, dry out the motor as described below. If after drying out the insulation resistance is still not greater than 1MOhm, the motor will need repairing.

DRYING OUT

This may be carried out either:

1. By baking in an oven at up to 90oC. Ensure the interior and exterior of the oven are well ventilated.

2. By locking the rotor so it cannot move and connecting a low voltage to the motor windings. Gradually increase the voltage from zero until the current is about one third the rating plate value. Trim the voltage as necessary so that the winding temperature remains below 90oC.

   Drying out is complete when the insulation resistance stops changing.

MAINTENANCE

Inspection

Inspect the motor at regular intervals. Ensure it is kept clean with clear ventilation openings, there is no excessive vibration and noises emitted from the motor are normal. Ensure fixings and fasteners have not loosened nor so corroded that either their strength has been reduced significantly or earthing has been impaired. Ensure also that electrical connections are tight and uncorroded and that earthing is intact.

Inspect shaft seals and terminal box gaskets to ensure they are in position and not significantly worn. Contact TECO if the seal/gasket types on the motor are unknown. Examine the paint finish and repaint if necessary to avoid excessive corrosion. Ensure that shaft couplings are fixed firmly and that shaft alignment is correct. Ensure also that there is no build up of liquid inside the motor that would adversely affect its performance and drain if there is.

Lubrication

Motors with double shielded (suffix "ZZ" on bearing type) bearings are lubricated for life and cannot be relubricated.

Larger frames (usually Frames D200 and above, D180 2 pole and C180 and above) in particular have regreasing facilities. These motors are shipped already-greased and the grease should be replaced at regular intervals. The length of the interval varies with size of motor and how it is used. The table below gives a guide to relubrication intervals. Excessive or too frequent lubrication may actually damage the motor.

Rated kW output	Poles	Relubrication period		
		Standard conditions	Severe conditions	Extreme conditions
0-30	4 upwards	7 years	3 years	6 months
37-75	4 upwards	210 days	70 days	30 days
90-185	4 upwards	90 days	30 days	15 days
0-18.5	2	5 years	2 years	3 months
22-75	2	180 days	60 days	30 days
90-110	2	90 days	30 days	30 days
132-600	2	90 days	30 days	15 days

For other ratings please refer to TECO.

DEFINITIONS

Standard conditions: 8 hour operation per day with rated or light loading in a clean low-vibration environment.

Severe conditions: 24 hour operation per day with rated/light loading or in a dirty/dusty environment or where the motor is subject to vibration/light shock loading.

Extreme conditions: Where there is heavy shock loading or high vibration or a very dirty/dusty environment.

REGREASING OPERATION

If regreasing is to be carried out with the motor running, ensure it is done only by properly-trained personnel and that live and moving parts are fully guarded.

Ensure the grease exit is open and the grease nipple is clean

Attach a low pressure grease gun to the nipple and pump in grease until clean grease emerges at the grease exit.

Remove the grease gun. Fully guard live and moving parts and then run the motor for 10-30 minutes ensuring that any surplus grease is properly disposed of, and then refit any grease exit plug.

GREASE TYPE

Ensure only the correct type of grease is used. Greases incompatible with that in the bearings can greatly reduce the bearing life. Consult TECO if you are not sure of the type supplied in your TECO motor.

TECO standard regreasable motors use Esso Unirex Lithium N3 grease.

SPARES

Use only genuine TECO spares or alternatives recommended by TECO. When ordering, please give full nameplate details and in particular:

Frame Number	
Type	
Poles	
kW	
Serial Number	

Quantity required	

For further Information, please contact:
TECO ELECTRIC EUROPE LTD
TECO Building · Marshall Stevens Way · Westinghouse Rd
Trafford Park · Manchester · M17 1PP
Tel: +44 (0)161 877 8025
Fax: +44 (0)161 877 8030
Email: enquiries@teco.co.uk

www.teco.co.uk

TECO Westinghouse

TECO ELECTRIC EUROPE LIMITED

TECO ELECTRIC EUROPE LTD
TECO Building · Marshall Stevens Way · Westinghouse Rd
Trafford Park · Manchester · M17 1PP
Tel: +44 (0)161 877 8025
Fax: +44 (0)161 877 8030
Email: enquiries@teco.co.uk

www.teco.co.uk

EMD10579 Issue 2 FEB 2002

Project:
LAVRION V-CCPP DMKT 11 21 302

Title: Motor General Arrangement Drawing (more detailed than first edition)
(Condensate Extraction Pumps 5LCB 10/20 AP001)

Supplier Document No:	-	Issue: 1
KKS Document No:	5-PAC-EDP-FPD-254	
Purpose of issue: For approval		Date: 15/07/04

413-005-PM21100-008-A

00-Y-X-10302-F3/I Issue 1

Prepared: SW

Reviewed: HL

Approved: CW

TYPE	OUTPUT		POLE	TIME RATING	VOLTAGE V	HZ	SYN. SPEED RPM
	HP.	KW.					
AEVE—WT001		500	4	CONT.	6000	50	1500

TOTALLY ENCLOSED AIR TO AIR COOLED VERTICAL TYPE, SQUIRREL CAGE ROTOR.

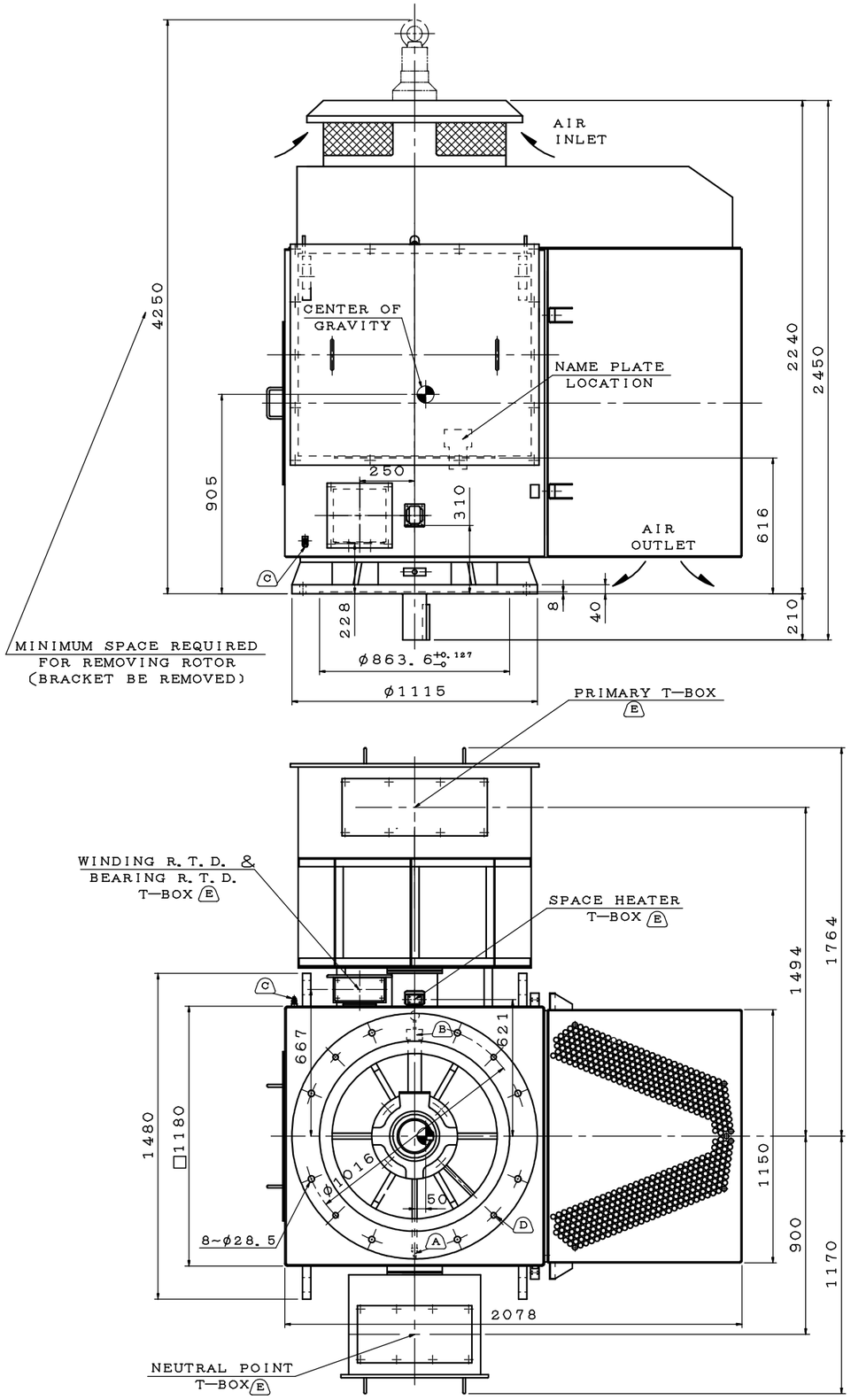

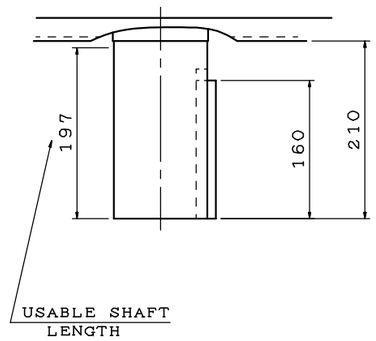

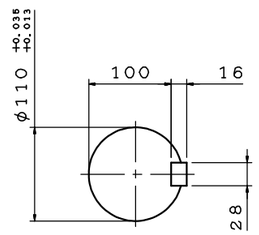

SHAFT END
(ENLARGED VIEW)

NOTE:
1. DIMENSIONS IN MM.
2. FRAME NO. 500A
3. F CLASS INSULATION
4. FOR DIRECT FLEXIBLE COUPLING.
5. BEARING SIZE:
   UPPER BEARING: 7322B (INSULATED)
   LOWER BEARING: 6226C3 (UNINSULATED)
6. UPPER BEARING IS INSULATED. ANY METAL CONNECTINOS TO IT MUST BE INSULATED.
7. LUBRICATION: UPPER BEARING AND LOWER BEARING USE GREASE.
8. ROTATION:COUNTER—CLOCKWISE (VIEWED FROM TOP).
9. WITH SPACE HEATER:3ϕ 400V, 400W.
10. WITH WINDING R.T.D. :PT 100Ω/0°C, 6PCS.
11. WITH BEARING R.T.D. :PT 100Ω/0°C, 2PCS. (DUAL ELEMENT)
12. ENCLOSURE: IP 55
13. CORROSION PROOF.
14. NOISE:BELOW 80dBA AT 1 METER DISTANCE NO LOAD.
15. NATURAL REED FREQUENCY: 19HZ.
    ABOVE CALCULATION IS CONSIDERING MOTOR AND FOR REFERENCE ONLY.
    THE WHOLE PUMPING SYSTEM ANALYSIS SHALL BE PERFORMED BY THE PUMP MANUFACTURER.
16. MOTOR APPROX. WEIGHT: 6000kgs.
17. TWMC IS NOT RESPONSIBLE FOR FOUNDATION DESIGN. THE SUPPORT REACTION NECESSARY FOR FOUNDATION DESIGN ARE AS FOLLOWS —kgs PER BOLT AT CENTERLINE OF HOLD DOWN BOLT HOLES:

STATIC	X	=	MOTOR WEIGHT/8 (AXIS)	
RATED MOTOR TORQUE	X	=	MOTOR WEIGHT/8 (AXIS)	± 320 kgs. (TANGENTIAL)
MAXIMUM MOTOR TORQUE	X	=	MOTOR WEIGHT/8 (AXIS)	± 2237 kgs. (TANGENTIAL)

(A) GREASE INLET NIPPLE (LOWER BEARING)

(B) GREASE DISCHARGER (LOWER BEARING)

(C) TWO M10 TAPPED GROUNDING PADS ON FRAME, DIAGONALLY OPPOSITE, WITH ONLY ONE GROUNDING STUD & TERMINAL LOCATED AS SHOWN.

(D) 4~M24 VERTICAL JACKING HOLES, 90° APART IN MOTOR BASE.

(E) REMOVABLE COVER FOR CABLE ENTRY TO BE DRILLED BY THE CUSTOMER.

TECO Westinghouse
DWG. 3A040F263 REV. 00

DWN.	S. WANG	JUL. 08. 2004
CHK.	H. LIU	JUL. 09. 2004
APP.	C. WANG	JUL. 09. 2004

REV.	DATE	PREP.	REVISED	APPRVD	ISSUDE FOR

PROPRIETARY INFORMATION
This document contains proprietary information of Empresarios Agrupados Internacional,S.A. and is to be used solely for the Project and the purpose for which it is furnished. It may not be disclosed to others for a different use without the written permission of Empresarios Agrupados Internacional,S.A.

Contains information for the design of structures, systems and components..... YES ☐ NO ☒
VERIFICATION: N/A ☒ PEER/SUP. ☐ VERIFIER ☐ NI CHK ☐
DOCUMENT PREPARED WITH CAD DO NOT MODIFY MANUALLY

EMPRESARIOS AGRUPADOS

PUBLIC POWER CORPORATION
LAVRION V CC PP
DMKT 11 21 302

METKA

OUTLINE DIMENSION
3—PHASE INDUCTION MOTOR

METKA DWG. No.	DIN
KKS DWG. No.	SCALE
EA DWG. No.	SHEET

Project:

LAVRION V-CCPP
DMKT 11 21 302

Title: Motor Data Sheet

(Condensate Extraction Pumps 5LCB 10/20 AP001)

Supplier Document No:	-	Issue: 0
KKS Document No:	5-LCB-EHP-FPD-252	
Purpose of issue: For approval		Date: 14/07/04

00-Y-X-10302-F3/I Issue 1

Prepared: MJ

Reviewed: SJ

Approved: LM

SPECIFICATION TABLE OF 3-PHASE SQUIRREL CAGE INDUCTION MOTOR	CUSTOMER	TEE	USER	TEE
	INQ. NO.		EQUIPMENT	
	JOB NO.	FD49301TA1 & FD4A302TA1	MACHINE	
	TOTAL SETS	1+1	ITEM NO.	

Item	Terms	Description			
1	Model	AEVE-WT001			
2	Code or Standard	Dimensions	Frame Assignment	Performance	Test
		IEC	TECO	IEC	IEC
3	Rating	500 kW 4 Pole 6000 Volt 3 Phase 50 Hz			
4	Service Duty	Continuous Rating			
5	Starting Method	D.O.L. or 85% R.V.S.			
6	Rotation	Counter-clockwise (View From Top)			
7	Drive Method	Direct Coupling			
8	Environment	Amb. Temp.: -20 ~ 40 ℃ (see note 7)			
		Humidity : Less Than 95 %RH			
		Altitude : Up to 1000 M			
9	Enclosure & Protection	IP55 : Totally Enclosure Indoor			
10	Cooling	IC611 : Fan Cooled With Built-in Air Cooler			
11	Mounting	IM3011: VSS, Flange			
12	Dimensions	Dr# 3A040F263(REV.00) Frame No : 500A			
13	Frame & Bracket	Frame : Steel Plate Bracket : Steel Plate			
14	Fan & Fan Cover	Fan : Steel Plate Fan Cover : Steel Plate			
15	Terminal Box	Steel Plate			
16	Lead Terminals	TLKF(35-10)X6			
17	Lubricant	Alvania R3 Grease (SHELL Oil Co.)			
18	Painting	Color : MUNSELL 7.5BG4/2			
19	Stator Winding	Ins. Class F			
20	Rotor Conductor	Cu-Alloy			
21	Starting Performance	LRC ≦ 320Amp LRT/FLT 60 %			
22	Operating Performance	% Load	100	Break Down Torque	
		Amp.	58.5	210 %FLT	
	At Rated 6000 Volt	Eff.%	94.5	Temp. Rise Limit.(R)	
		P.F.%	87.0	Stator 80 ℃	
		R.P.M.	1480		
23	Note	1. With Space Heater : 3φ 400V 400W 2. With Winding RTD : PT 100Ω/0℃ 6pcs 3. With Bearing RTD : PT 100Ω/0℃ 2pcs(DUAL ELEMENT) 4. Noise : Below 80dBA at 1 Meter Distance No Load 5. Approx Weight : 6000KGS 6. Corrosion Proof 7. As the insulation is Class F, the motors can work with max. amb. temp. 45ºC			

APPD.	Ming	JUL. 12 2004	TECO Westinghouse	DWG NO.
CHKD.	H.DEE	JUL. 12 2004		3A057H186-14880
DWN.	S.HUANG	JUL. 7 2004		REV.00 1/1

Project:

LAVRION V-CCPP
DMKT 11 21 302

Title: Motor Connection Diagrams

(Condensate Extraction Pumps 5LCB 10/20 AP001)

Supplier Document No:	-	Issue: 0
KKS Document No:	5-PAC-ESK-FPD-262	
Purpose of issue: For approval		Date: 14/07/04

00-Y-X-10302-F3/I Issue 1

Prepared: MJ

Reviewed: SJ

Approved: LM

DATE	SCHEMATIC WYE CONN 6 LEADS	MODEL

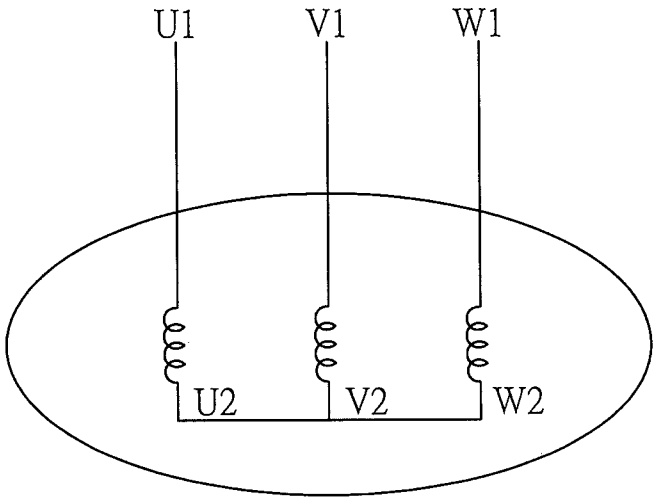

SCHEMATIC - WYE CONN - 6 LEADS

CONNECTION	ROTATION (VIEWED FROM DRIVE END)
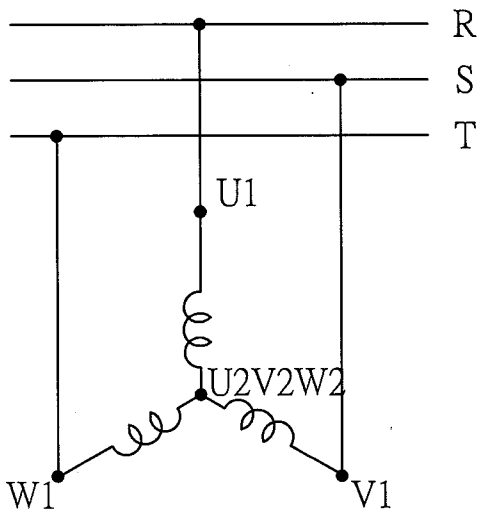	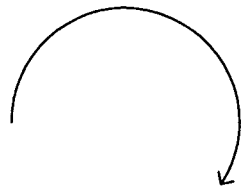

DWN.	S.HUANG	MAR・03・2003	TECO Westinghouse	DWG NO. REV: 00
CHKD.	T.HSIAO	MAR・03・2003		3A061H468
APPD.	T.HSIAO	MAR・03・2003		

DATE	SCHEMATIC SPACE HEATER	MODEL

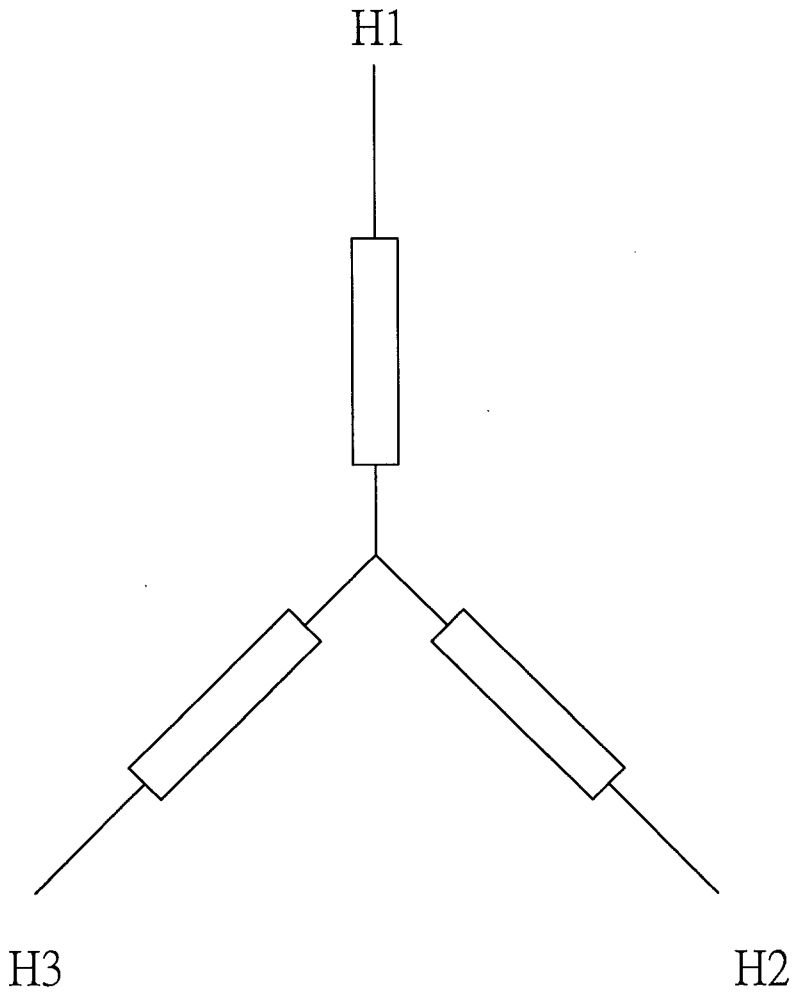

400V 3PH 400W

DWN.	S.HUANG	JUL・10・2004	TECO Westinghouse	DWG NO. REV: 00
CHKD.	T.HSIAO	JUL・10・2004		3A061H603
APPD.	T.HSIAO	JUL・10・2004		

DATE	WIRING DIAGRAM	MODEL

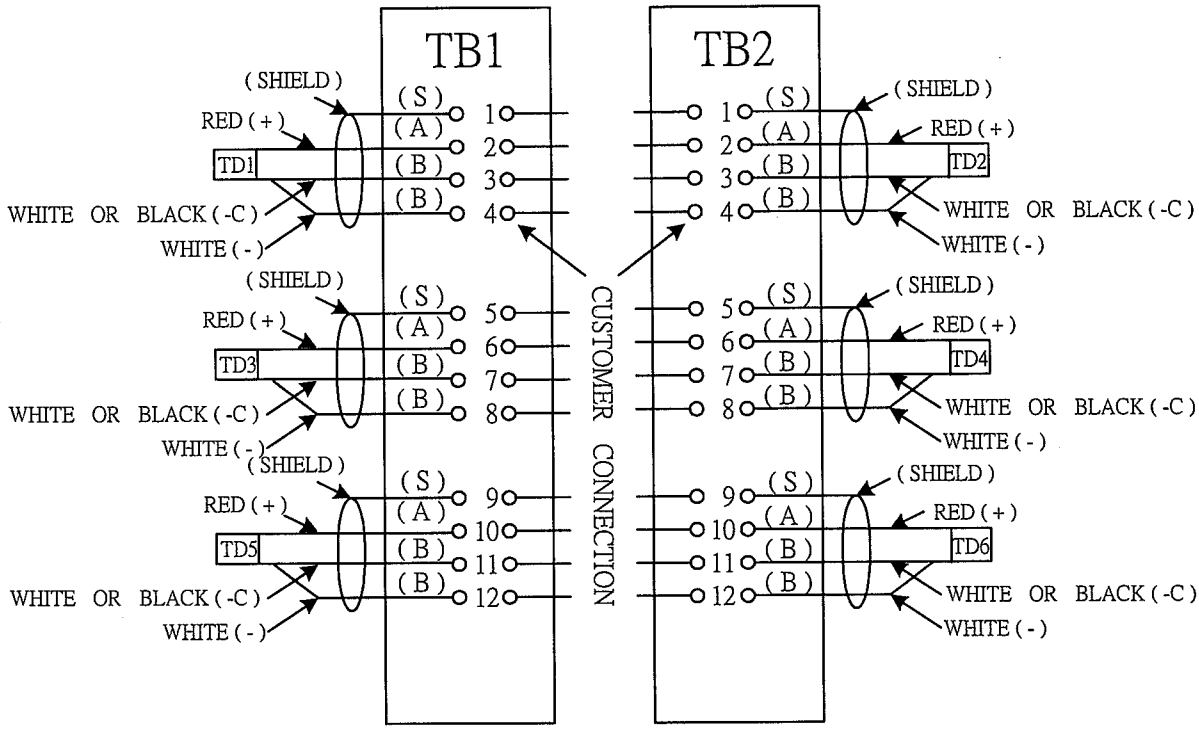

DWN.	S.HUANG	MAR・03・2003	TECO Westinghouse	DWG NO. REV: 00
CHKD.	T.HSIAO	MAR・03・2003		3A061H512
APPD.	C.Y.HUANG	MAR・03・2003		

Project:
LAVRION V-CCPP DMKT 11 21 302

Title: Motor Instrument List
(Condensate Extraction Pumps 5LCB 10/20 AP001)

Supplier Document No:	-	Issue: A
KKS Document No:	5-LCB-YLP-FPD-256	
Purpose of issue: For Revision		Date: 05/01/05

00-Y-X-10302-F3/I Issue 1

Prepared: NO

Reviewed: MAP

Approved: MM

FLOWSERVE

Customer: **METKA**
Project: **LAVRION V**
Tag Nº **5LCB10/20AP001**
Service **CONDENSATE PUMPS**
FPD REF: **10.07.50.10896**
P.O. -

SHEET **1**
OF **1**

Equipment	REV.	Tag	Location	Type of instrument	Manufactured/ Supplied by	Model	Medium	Unit	Messur.Range From	Messur.Range To	ALIMENT.	Output	Set Point Alarm	Set Point Trip	Drawing No.	Notes
MOTOR		5LCB10/20AP001JE21	Motor winding phase R	Temperature detector	**Minco**	**S9785PA100T260Z60**	Metal	ºC	0	200	-	Ohm	**130**	**150**		Pt 100 Single / 3H
"		5LCB10/20 AP001JE22	Motor winding phase S	Temperature detector	**Minco**	**S9785PA100T260Z60**	Metal	ºC	0	200	-	Ohm	**130**	**150**		Pt 100 Single / 3H
"		5LCB10/20AP001JE23	Motor winding phase T	Temperature detector	**Minco**	**S9785PA100T260Z60**	Metal	ºC	0	200	-	Ohm	**130**	**150**		Pt 100 Single / 3H
"		5LCB10/20AP001JE24	Motor winding phase R	Temperature detector	**Minco**	**S9785PA100T260Z60**	Metal	ºC	0	200	-	Ohm	**130**	**150**		Pt 100 single / 3 H / (spare)
"		5LCB10/20AP001JE25	Motor winding phase S	Temperature detector	**Minco**	**S9785PA100T260Z60**	Metal	ºC	0	200	-	Ohm	**130**	**150**		Pt 100 single / 3 H / (spare)
"		5LCB10/20AP001JE26	Motor winding phase T	Temperature detector	**Minco**	**S9785PA100T260Z60**	Metal	ºC	0	200	-	Ohm	**130**	**150**		Pt 100 single / 3 H / (spare)
"	A	5LCB10/20AP001JE34	Radial bearing , driven end	Temperature detector	**Teco / Teco**	**3A955**	Metal	ºC	0	150		Ohm	**90**	**95**		2 x Pt 100 / 3W
"	A	5LCB10/20AP001JE33	Radial bearing , non driven end	Temperature detector	**Teco / Teco**	**3A955**	Metal	ºC	0	150		Ohm	**90**	**95**		2 x Pt 100 / 3W

Rev.	DESCRIPTION	Name	Date
0	FIRST ISSUE	N.O	15/07/2004

Pump: 243APKD-4

Prepared by: N.O.Z
Checked by: M.A.P.M.
App´d by: M.M.

TITLE: **CONDENSATE INSTRUMENT LIST**
MOTOR

REF:

DRAWING **5-LCB-YLP-FPD-256** **A**

TECO Westinghouse

TECO ELECTRIC EUROPE LIMITED

TO: Flowserve Pump Division
Avda Fuentmar, 26 - 28
Coslada
28820 Madrid
Spain

ATTN: Sra. Miriam Meroño

Date: 12 July 2004
Your Ref: To be confirmed.

Our Ref:
Transmittal No: 002.

QTY	DOCUMENT NUMBER	CODE	DOCUMENT TITLE
			Project: Lavrion V
			500 kW 4 poles Motors / CEP
1	3A040F263 Rev.00	B	Outline Dimension Drawing.
1	3A040X996 Rev.00	B	Primary Terminal Box.
1	3A040Z002 Rev.00	B	Neutral Terminal Box.
1	3A040Z006 Rev.00	B	Space Heater Terminal Box.
1	3A040Z005 Rev.00	B	Winding & Bearing RTD Terminal Box.
1	3A040W993 Rev.00	B	Sectional drawing with parts list.
1	3A040Z016 Rev.00	B	Recommended spare parts list.

CODES:
A - **Preliminary**
B - **For Approval** - One copy must be returned within 7 days or delivery may be affected.
C - **Certified Drawing** - Any changes may affect price and delivery
D - **As Built**

COMMENTS:

Luis Monteagudo
SIGNED.....…….
For Teco Electric Europe Limited

Teco Building Marshall Stevens Way Trafford Park Manchester M17 1PP England
Telephone +44 (0)161 877 8025 Fax +44 (0)161 877 8030

TYPE	OUTPUT		POLE	TIME RATING	VOLTAGE V	HZ	SYN. SPEED RPM
	HP.	KW.					
AEVE—WT001		500	4	CONT.	6000	50	1500

TOTALLY ENCLOSED AIR TO AIR COOLED VERTICAL TYPE, SQUIRREL CAGE ROTOR.

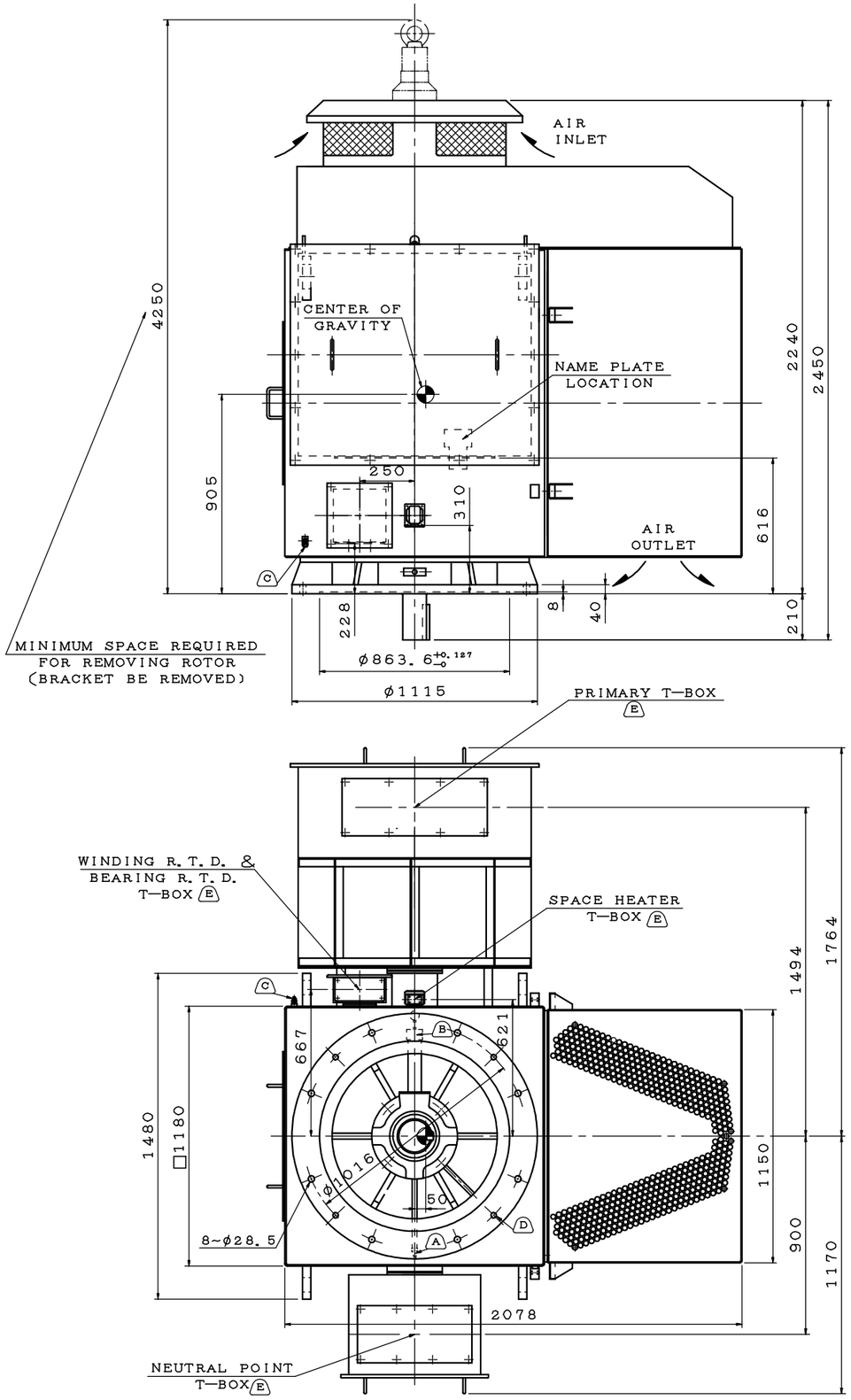

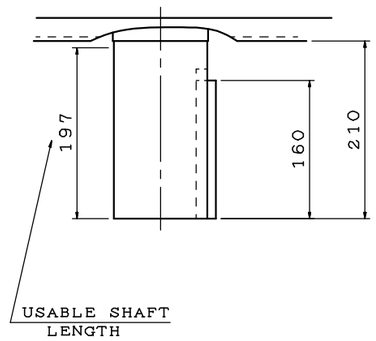

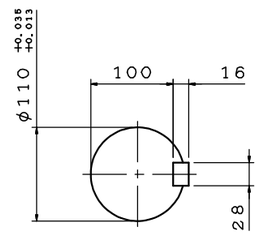

SHAFT END
(ENLARGED VIEW)

NOTE:
1. DIMENSIONS IN MM.
2. FRAME NO. 500A
3. F CLASS INSULATION
4. FOR DIRECT FLEXIBLE COUPLING.
5. BEARING SIZE:
   UPPER BEARING: 7322B (INSULATED)
   LOWER BEARING: 6226C3 (UNINSULATED)
6. UPPER BEARING IS INSULATED. ANY METAL CONNECTINOS TO IT MUST BE INSULATED.
7. LUBRICATION: UPPER BEARING AND LOWER BEARING USE GREASE.
8. ROTATION:COUNTER—CLOCKWISE (VIEWED FROM TOP).
9. WITH SPACE HEATER:3ϕ 400V, 400W.
10. WITH WINDING R.T.D. :PT 100Ω/0°C, 6PCS.
11. WITH BEARING R.T.D. :PT 100Ω/0°C, 2PCS. (DUAL ELEMENT)
12. ENCLOSURE:IP54.
13. CORROSION PROOF.
14. NOISE:BELOW 80dBA AT 1 METER DISTANCE NO LOAD.
15. NATURAL REED FREQUENCY: 19HZ.
    ABOVE CALCULATION IS CONSIDERING MOTOR AND FOR REFERENCE ONLY.
    THE WHOLE PUMPING SYSTEM ANALYSIS SHALL BE PERFORMED BY THE PUMP MANUFACTURER.
16. MOTOR APPROX. WEIGHT: 6000kgs.
17. TWMC IS NOT RESPONSIBLE FOR FOUNDATION DESIGN. THE SUPPORT REACTION NECESSARY FOR FOUNDATION DESIGN ARE AS FOLLOWS —kgs PER BOLT AT CENTERLINE OF HOLD DOWN BOLT HOLES:

STATIC	X =	MOTOR WEIGHT/8 (AXIS)		
RATED MOTOR TORQUE	X =	MOTOR WEIGHT/8 (AXIS)	±	320 kgs. (TANGENTIAL)
MAXIMUM MOTOR TORQUE	X =	MOTOR WEIGHT/8 (AXIS)	±	2237 kgs. (TANGENTIAL)

(A) GREASE INLET NIPPLE (LOWER BEARING)

(B) GREASE DISCHARGER (LOWER BEARING)

(C) TWO M10 TAPPED GROUNDING PADS ON FRAME, DIAGONALLY OPPOSITE, WITH ONLY ONE GROUNDING STUD & TERMINAL LOCATED AS SHOWN.

(D) 4~M24 VERTICAL JACKING HOLES, 90° APART IN MOTOR BASE.

(E) REMOVABLE COVER FOR CABLE ENTRY TO BE DRILLED BY THE CUSTOMER.

TECO Westinghouse
DWG. 3A040F263 REV. 00

DWN.	S. WANG	JUL. 08. 2004
CHK.	H. LIU	JUL. 09. 2004
APP.	C. WANG	JUL. 09. 2004

REV.	DATE	PREP.	REVISED	APPRVD	ISSUDE FOR

PROPRIETARY INFORMATION
This document contains proprietary information of Empresarios Agrupados Internacional,S.A. and is to be used solely for the Project and the purpose for which it is furnished. It may not be disclosed to others for a different use without the written permission of Empresarios Agrupados Internacional,S.A.

Contains information for the design of structures, systems and components..... YES ☐ NO ☒
VERIFICATION: N/A ☒ PEER/SUP. ☐ VERIFIED BY CHK ☐

DOCUMENT PREPARED WITH CAD DO NOT MODIFY MANUALLY

EMPRESARIOS AGRUPADOS

METKA

PUBLIC POWER CORPORATION
LAVRION V CC PP
DMKT 11 21 302

OUTLINE DIMENSION
3—PHASE INDUCTION MOTOR

METKA DWG. No.	DIN
KKS DWG. No.	SCALE
EA DWG. No.	SHEET

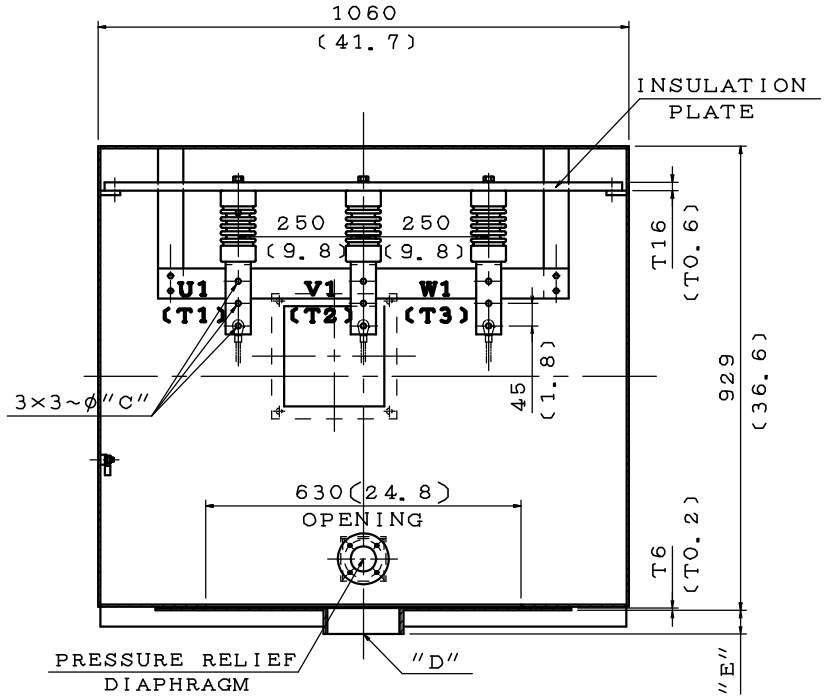

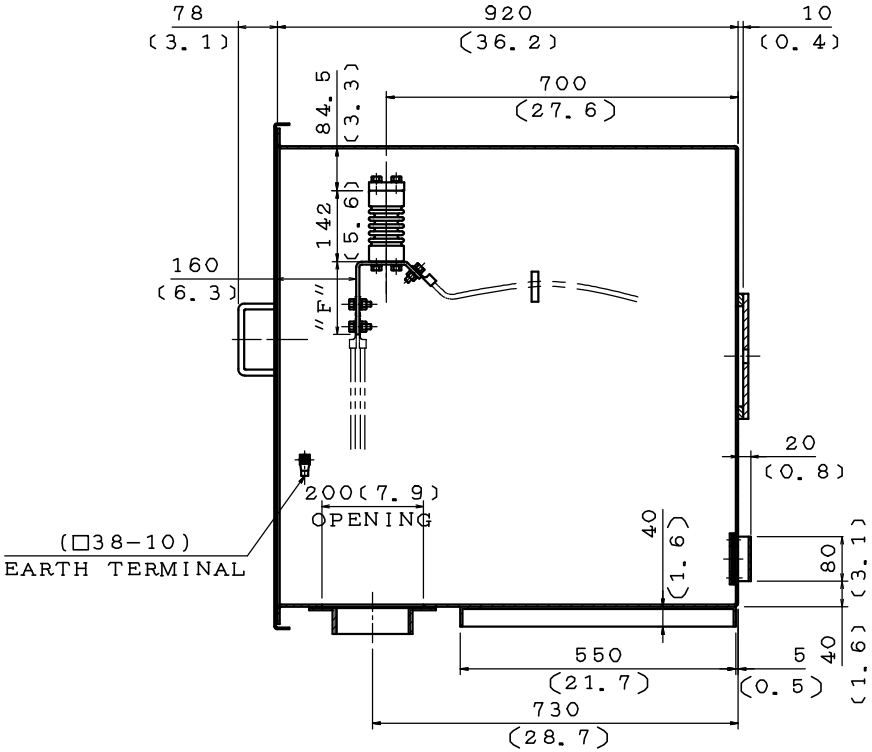

ITEM	C	D	E	F
01	11 (0.43)	0	0	90 (3.54)
02	13 (0.51)	0	0	90 (3.54)
03	17 (0.67)	0	0	100 (3.94)
04	11 (0.43)	NPT4"	24 (0.94)	90 (3.54)
05	13 (0.51)	NPT4"	24 (0.94)	90 (3.54)
06	17 (0.67)	NPT4"	24 (0.94)	100 (3.94)

NOTE:
1. DIMENSIONS IN MM(INCHES).
2. PRIMARY T—BOX
3. ORDER NO. FD49301TA1 & FD4A302TA1.

TECO Westinghouse
DWG. 3A040X996 REV. 00

DWN.	S. WANG	JUL. 08. 2004
CHK.	H. LIU	JUL. 09. 2004
APP.	C. WANG	JUL. 09. 2004

LAVRION V CC PP
PUBLIC POWER CORPORATION
DMKT 11 21 302

METKA

TERMINAL BOX

NO.	DATE	PREP.	MFIRD	APPVD	ISSUDE FOR

PROPRIETARY INFORMATION
This document contains proprietary information of Hellenic Aerospace Industries,S.A. and is to be used solely for the Project and for purpose for which it is furnished. It may not be disclosed to others for a different use without the written permission of Hellenic Aerospace Industries,S.A.

Contains information for the design of electronic systems and components..... THE
VERIFICATION: S/A ☐ JOB/DWG. ☐ VERIFIED BY ☐

DOCUMENT PREPARED WITH CAD
DO NOT MODIFY MANUALLY

HELLENIC AEROSPACE INDUSTRIES

METKA DWG. No.	DIN
EKS DWG. No.	SCALE
HA DWG. No.	SHEET

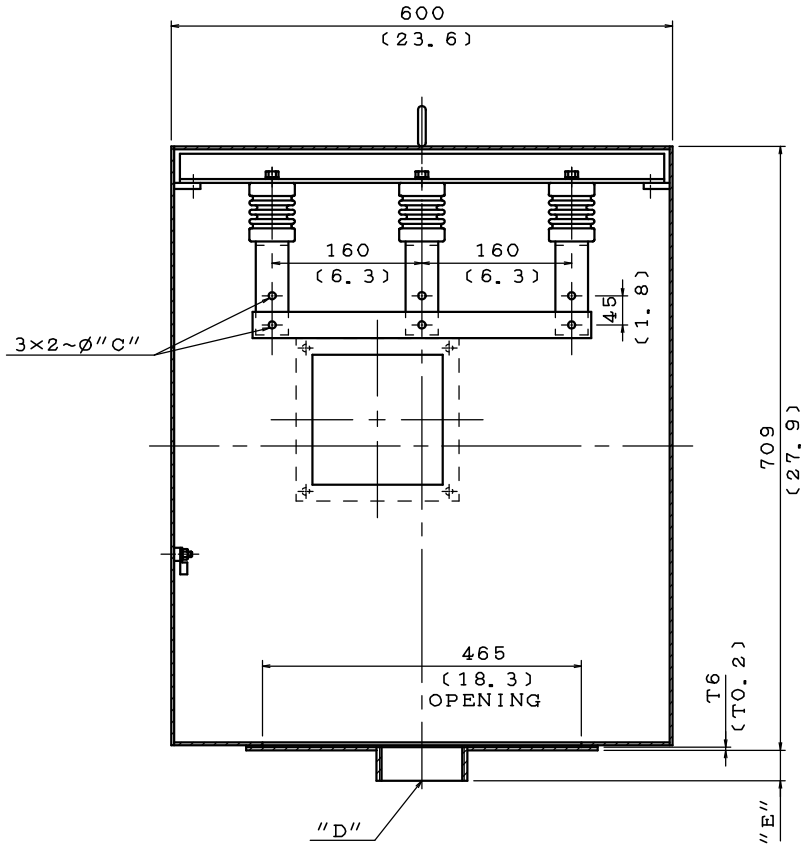

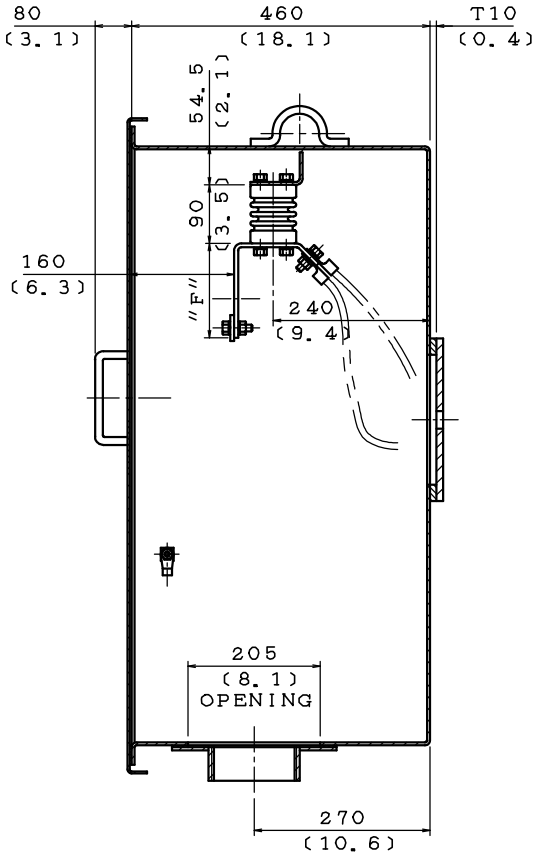

ITEM	C	D	E	F
01	11 (0.43)	0	0	90 (3.54)
02	13 (0.51)	0	0	90 (3.54)
03	17 (0.67)	0	0	100 (3.94)
04	11 (0.43)	NPT4"	24 (0.94)	90 (3.54)
05	13 (0.51)	NPT4"	24 (0.94)	90 (3.54)
06	17 (0.67)	NPT4"	24 (0.94)	100 (3.94)

NOTE:
1. DIMENSIONS IN MM(INCHES).
2. NEUTRAL POINT T—BOX
3. ORDER NO. FD49301TA1 & FD4A302TA1.

TECO Westinghouse
DWG. 3A040Z002 REV. 00

DWN.	S. WANG	JUL. 08. 2004
CHK.	H. LIU	JUL. 09. 2004
APP.	C. WANG	JUL. 09. 2004

NO.	DATE	PREP.	MFUND	APPVD	ISSUDE FOR

LAVRION V CC PP
PUBLIC POWER CORPORATION
DMKT 11 21 302

METKA

TERMINAL BOX

METKA DWG. No.	DIN
EKS DWG. No.	SCALE
HA DWG. No.	SHEET

IMPRESARIOS ASOCIADOS

PROPRIETARY INFORMATION
This document contains proprietary information of Impresarios Asociados Internacional,S.A. and is to be used solely for the Project and for purpose for which it is furnished. It may not be disclosed to others for a different use without the written permission of Impresarios Asociados Internacional,S.A.

Contains information for the design of elevators, systems and components..... THE SERIES
VERIFICATION: S/A ☐ JOB/DWG. ☐ VERIFIED SIGN ☐

DOCUMENT PREPARED WITH CAD
DO NOT MODIFY MANUALLY

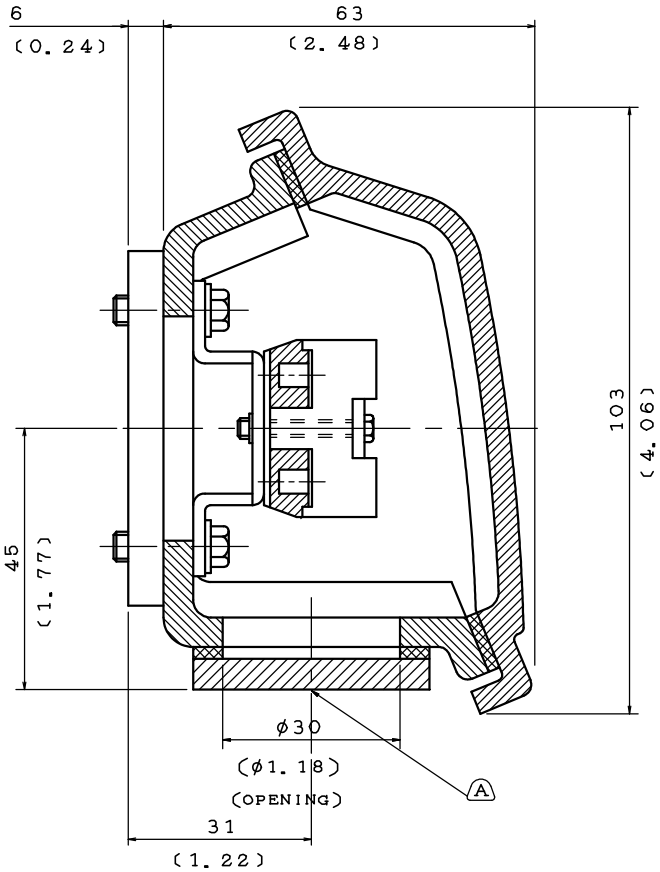

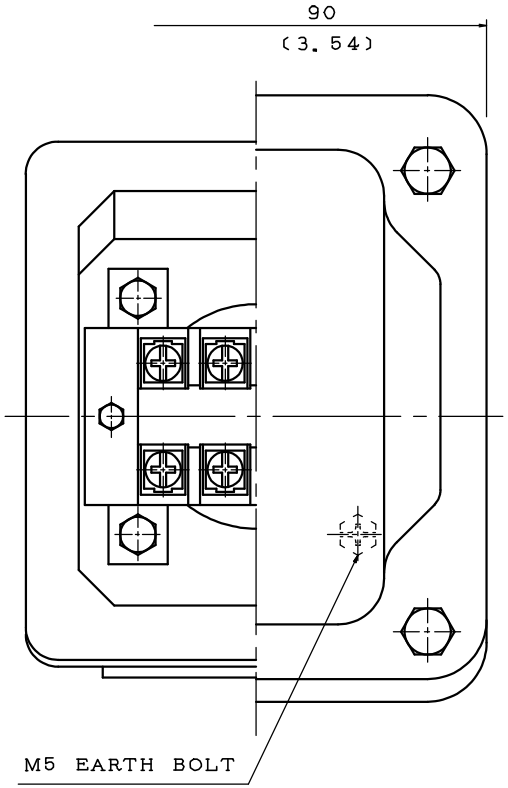

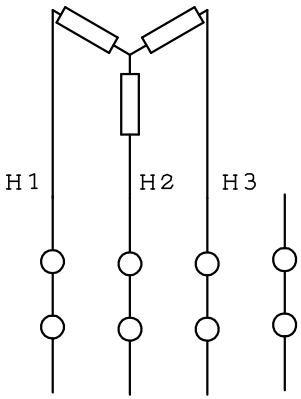

NOTE:
1. DIMENSIONS IN MM(INCHES).
2. TW—06
3. SPACE HEATER T—BOX.
4. ORDER NO. FD49301TA1
FD4A302TA1.

(A) REMOVABLE COVER FOR AUXILIARY LEAD ENTRY TO BE DRILLED BY THE CUSTOMER.

TECO Westinghouse
DWG. 3A040Z006 REV. 00

DWN.	S. WANG	JUL. 08. 2004
CHK.	H. LIU	JUL. 09. 2004
APP.	C. WANG	JUL. 09. 2004

SH.	DATE	PREP.	MFIRD	APPVD	ISSUDE FOR

LAVRION V CC PP
PUBLIC POWER CORPORATION
DMKT 11 21 302

METKA

TERMINAL BOX

METKA DWG. No. | DIN
EKS DWG. No. | SCALE
HA DWG. No. | SHEET

IMPRESARIOS ASFALTADOS

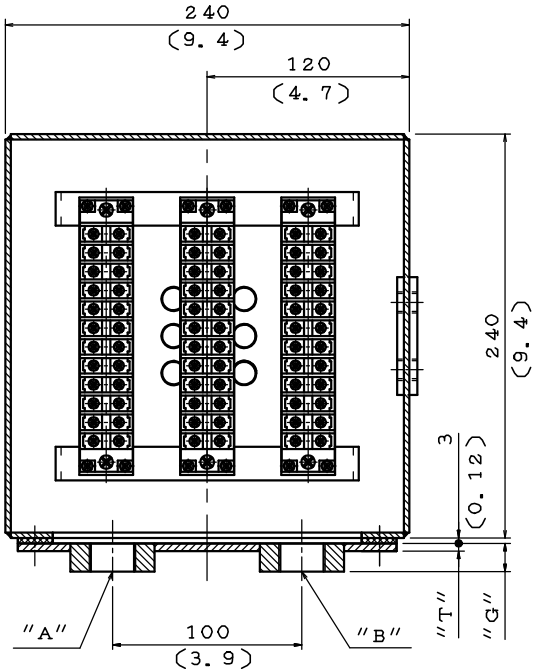

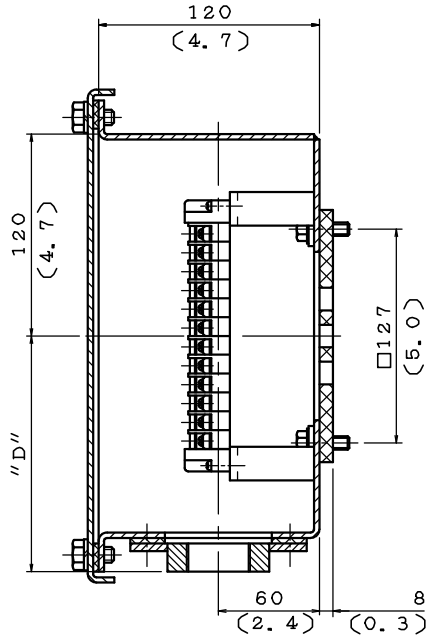

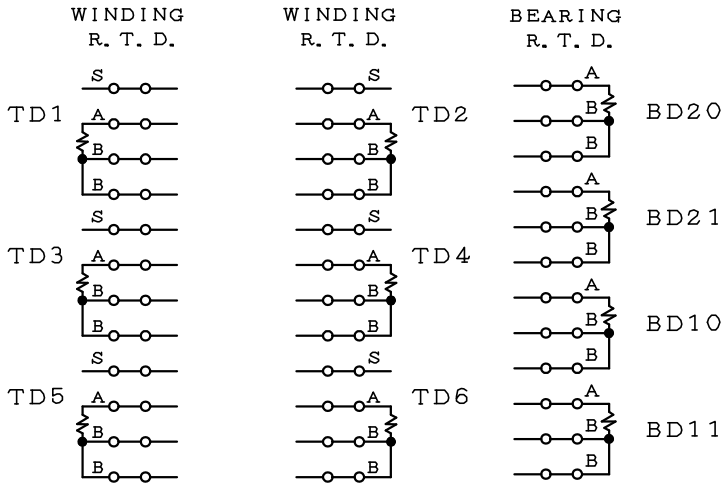

NOTE:
1. DIMENSIONS IN MM(INCHES).
2. WINDING R.T.D. &
   BEARING R.T.D. T—BOX.
3. TD1 & TD2 FOR U PHASE
   TD3 & TD4 FOR V PHASE
   TD5 & TD6 FOR W PHASE
   BD10 & BD11 FOR DRIVE END BEARING
   BD20 & BD21 FOR NON—DRIVE END BEARING.
4. ORDER NO. FD49301TA1 &
   FD4A302TA1.

ITEM	A	B	D	G	T
01	O	O	127.5 (5.0)	4.5 (0.18)	4.5 (0.18)
02					
03					
04					

TECO Westinghouse
DWG. 3A040Z005 REV. 00

DWN.	S. WANG	JUL. 08. 2004
CHK.	H. LIU	JUL. 09. 2004
APP.	C. WANG	JUL. 09. 2004

NO.	DATE	PREP.	MFIRD	APPVD	ISSUDE FOR

LAVRION V CC PP
PUBLIC POWER CORPORATION
DMKT 11 21 302

METKA

TERMINAL BOX

METKA DWG. No.
DIN
EKS DWG. No.
SCALE
HA DWG. No.
SHEET

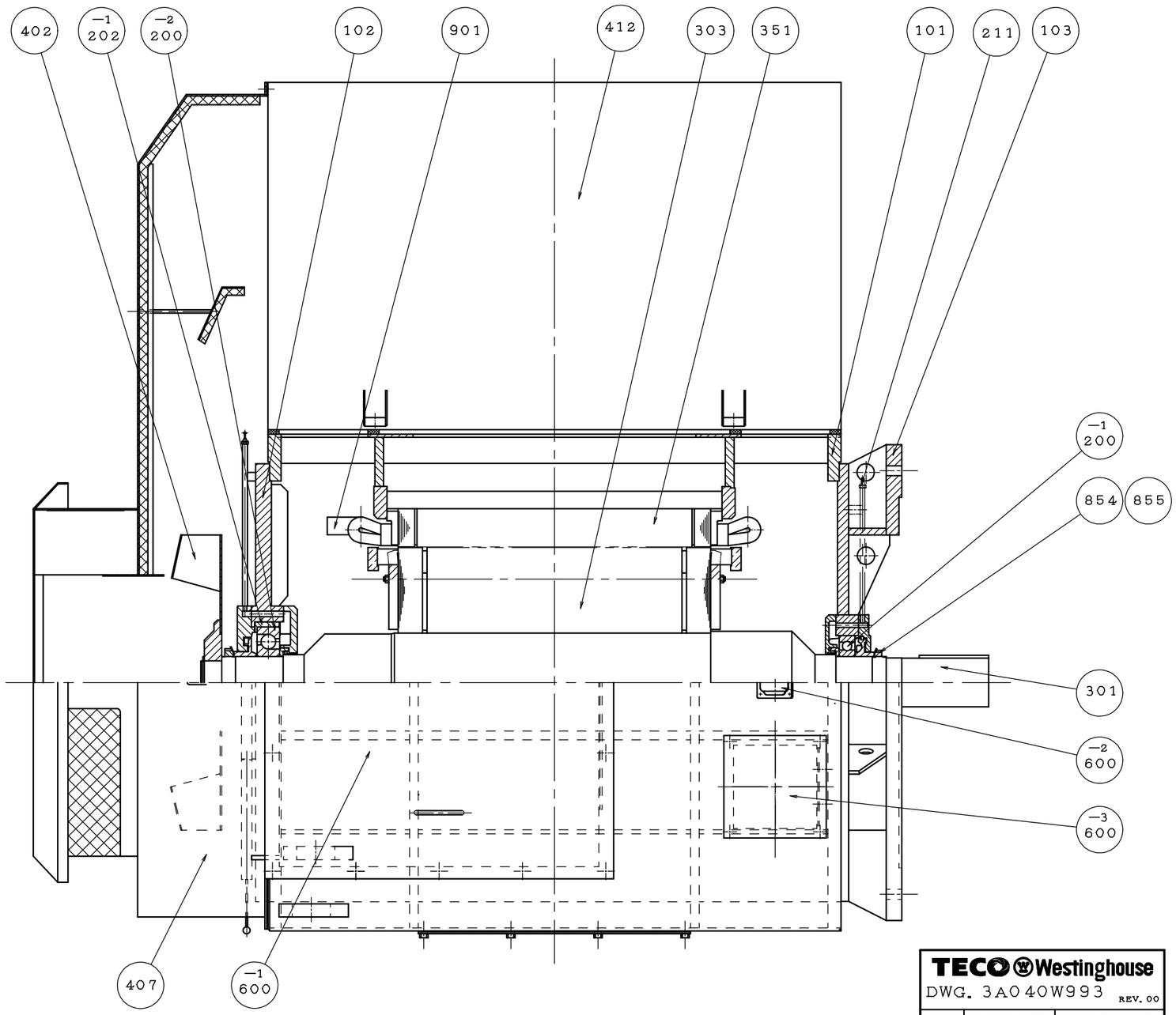

ITEM	NAME
101	FRAME
102	UPPER BRACKET
103	LOWER BRACKET
200^{-1}	ROLLER BEARING
200^{-2}	THRUST BEARING
202^{-1}	INSULATION BUSHING
211	GREASE INLET PIPE
301	SHAFT
303	R CORE
351	S CORE
402	EXTERNAL FAN
407	FAN COVER
412	COOLER
600^{-1}	PRIMARY T—BOX
600^{-2}	HEATER T—BOX
600^{-3}	WINDING R.T.D. & BEARING R.T.D. T—BOX
854	LOCK NUT
855	LOCK WASHER
901	3 PHASE S WDG

TECO Westinghouse

DWG. 3A040W993 REV. 00

DWN.	S. WANG	JUL. 08. 2004
CHK.	H. LIU	JUL. 09. 2004
APP.	C. WANG	JUL. 09. 2004

REV.	DATE	PREP.	REVISED	APPRVD	ISSUE FOR

PROPRIETARY INFORMATION

This document contains proprietary information of Empresarios Agrupados Internacional, S.A. and is to be used solely for the Project and the purpose for which it is furnished. It may not be disclosed to others for a different use without the written permission of Empresarios Agrupados Internacional, S.A.

Contains information for the design of structures, systems and components..... YES ☒ NO ☐
VERIFICATION: N/A ☐ IDO/EUP, ☒ VERIFIER SIGNS ☐

DOCUMENT PREPARED WITH CAD DO NOT MODIFY MANUALLY

EMPRESARIOS AGRUPADOS

PUBLIC POWER CORPORATION

LAVRION V CC PP
DMKT 11 21 302

METKA

SCHEMATIC DRAWING
3—PHASE INDUCTION MOTOR

METKA DWG. No.	DIN
XKS DWG. No.	SCALE
EA DWG. No.	SHEET

CUSTOMER: TEE—FLOWSERVE

MACHINE: 4P—500kW PUMP MOTOR

ORDER NO: FD49301TA1 (TOTAL UNIT:1)
FD4A302TA1 (TOTAL UNIT:1)

ITEM	NAME	OUTLINE	SPEC.	QUANTITY WORKING (PER MTR)	PART NUMBER
1	UPPER BEARING	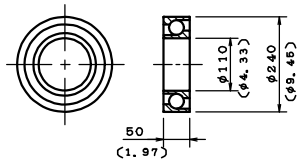	7322B	1	23008073228
2	LOWER BEARING	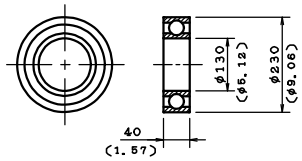	6226C3	1	23061062262

NOTE:

1. DIMENSIONS IN MM(INCHES).

TECO Westinghouse
DWG. 3A040Z016 REV. 00

DWN.	S. WANG	JUL. 08. 2004
CHK.	H. LIU	JUL. 09. 2004
APP.	C. WANG	JUL. 09. 2004

NO.	DATE	PREP.	MFUND	APPVD	ISSUDE FOR

PROPRIETARY INFORMATION
This document contains proprietary information of Hyundai Heavy Industries Co.,Ltd. and is to be used solely for the Project and the purpose for which it is furnished. It may not be disclosed to others for a different use without the written permission of Hyundai Heavy Industries Co.,Ltd.

Contains information for the design of electrical systems and components.

DOCUMENT PREPARED WITH CAD
DO NOT MODIFY MANUALLY

HYUNDAI HEAVY INDUSTRIES

PUBLIC POWER CORPORATION
LAVRION V CC PP
DMKT 11 21 302

METKA

RECOMMENDED
SPARE PARTS LIST

METKA DWG. No.	DIN
EKS DWG. No.	SCALE
HA DWG. No.	SHEET

Operating Basis

Equipment Main Function.

The main function of the Condensate Pumps is to deliver condensate from the condenser hotwell to the HRSG. This function is provided by two 100% capacity centrifugal vertical condensate through the gland seal condenser and the low pressure economizers of the HRSG to the low pressure drum.

Spare Parts and Lubricants List

Project:

LAVRION V-CCPP
DMKT 11 21 302

Title: Spare Parts List

(Condensate Extraction Pumps 5LCB 10/20 AP001)

Supplier Document No:	-	Issue: 0
KKS Document No:	5-LCB-MLJ-FPD-104	
Purpose of issue: For Information		Date: 2/12/04

00-Y-X-10302-F3/I Issue 1

Prepared: TA

Reviewed: MM

Approved: AF

LIST OF SPARE PARTS AND INTERCHANGEABLE PARTS

FOR ..... YEARS OF CONTINUOUS OPERATION

CUSTOMER	METKA (LAVRION V CCPP)
SUPPLIER	FLOWSERVE SPAIN S.A.
QUOTE NO.	5121/04
TECHNICAL SHEET No.	
DATE	25/11/2004
TOTAL NUMBER OF EQUAL EQPT.	2

TYPE OF EQUIPMENT	ORDER NUMBERS OF THE EQUIPMENT			
CONDENSATE EXTRACTION PUMPS 243APKD-4	5LCB 10 AP001			
	5LCB 20 AP001			

ITEM No.	DESCRIPTION OF THE PART	No. OF SECTION DRAWING BY MANUFACTURER	PART NO. IN SECTION DRAWING BY MANUFACTURER	MATERIAL	DELIVERY SCHEDULE IN MONTHS	MANUFACTURER SERIAL NUMBER	CUSTOMER CODE NUMBER	AMOUNT TO ORDER	MANUFACTURER MODEL	Supplier ID	5LCB 10 A	5LCB 20 A															TOTAL NUMBER OF PARTS IN SERVICE	SPARES RECOMMENDED BY THE MANUFACTURER
											243APKD-4	243APKD-4																
											1	2	3	4	5	6	7	8	9	10	11	12	13	14	15	16	17		
1	IMPELLER 1ST . STAGE	243APKD500XE57	3A	A487/A487M	3	M149483/4	6,12E+08				1	1																2	1
2	IMPELLER INTERMEDIATE		3B	A487/A487M	3	M149483/4	6,12E+08				3	3																6	3
3	IMPELLER RING 1ST. STAGE		6A	A582 T416	2	M149483/4	4E+08				2	2																4	2
4	IMPELLER RING INTERM. STAGE		6B	A582 T416	2	M149483/4	4E+08				3	3																6	3
5	LOWER SHAFT		10A	A276 T410	3	M149483/4	4,11E+08				1	1																2	1
6	INTERMEDIATE SHAFT		10B	A276 T410	3	M149483/4	4,11E+08				1	1																2	1
7	IMPELLER KEY 1ST. STG.		11A	AISI 410	1	M149483/4	42116080K				1	1																2	1
8	IMPELLER KEY INTERM. STAGES		11B	AISI 410	1	M149483/4	42116087K				3	3																6	3
9	SHAFT COUPLING KEY		12A	AISI 410	1	M149483/4	42116133K				2	2																4	2
10	COUPLING KEY		12B	AISI 410	1	M149483/4	42116221K				1	1																2	1
11	THRUST SLEEVE KEY		54	AISI 410	1	M149483/4	42116107K				1	1																2	1
12	REGULATION NUT		69	F-1140	2	M149483/4	4,2E+08				1	1																2	1
13	SEAL BOX BUSHING		88	A582 T416	2	M149483/4	4E+08				1	1																2	1
14	IMPELLER NUT		126	A276 T410	2	M149483/4	4,2E+08				1	1																2	1
15	SHAFT SLEEVE		135A	A276 T410	2	M149483/4	4,07E+08				1	1																2	1
16	SHAFT SLEEVE		135B	A276 T410	2	M149483/4	4,07E+08				1	1																2	1
17	SHAFT SLEEVE		135C	A276 T410	2	M149483/4	4,07E+08				1	1																2	1
18	SHAFT SLEEVE		135D	A276 T410	2	M149483/4	4,07E+08				4	4																8	4
	BALL BEARING		205	STEEL	2	M149483/4	5,02E+08				1	1																2	2
	BEARING		227A	EK24	2	M149483/4	4,09E+08				2	2																4	4
	BEARING		227B	EK24	2	M149483/4	4,09E+08				1	1																2	2
	BEARING		227C	EK24	2	M149483/4	4,09E+08				4	4																8	8
	BEARING		227D	EK24	2	M149483/4	4,09E+08				1	1																2	2
	SPLIT RING		252	A276 T410	2	M149483/4	4E+08				1	1																2	1
	GASKET		262A	KLINGER S	1	M149483/4	41301590D				1	1																2	2
	GASKET		262B	KLINGER S	1	M149483/4	41301378D				1	1																2	2
	GASKET		262C	KLINGER S	1	M149483/4	41301599D				1	1																2	2
	SPHERICAL ROLLER BEARING		263	STEEL	2	M149483/4	5,02E+08				1	1																2	2
	SLEEVE KEY		291	AISI 410	1	M149483/4	4,21E+08				6	6																12	6
	SLEEVE KEY		291A	AISI 410	1	M149483/4	4,21E+08				1	1																2	1
	SPLIT THRUST RING		312	A276 T410	2	M149483/4	4E+08				3	3																6	3
	RETAINING RING		397A	AISI-302	1	M149483/4	5,04E+08				2	2																4	2
	RETAINING RING		397B	AISI-302	1	M149483/4	5,04E+08				11	11																22	11
	MECHANICAL SEAL		429	---	3	M149483/4	949262				1	1																2	1
	SHAFT COUPLING		449	A276 T410	3	M149483/4	4,07E+08				1	1																2	1
	O-RING		456A	BUNA N	1	M149483/4	5,01E+08				2	2																4	4
	O-RING		456B	BUNA N	1	M149483/4	5,01E+08				1	1																2	2
	O-RING		456C	BUNA N	1	M149483/4	5,01E+08				1	1																2	2
	O-RING		456D	BUNA N	1	M149483/4	5,01E+08				3	3																6	6
	O-RING		456E	BUNA N	1	M149483/4	5,01E+08				2	2																4	4
	O-RING		456F	BUNA N	1	M149483/4	8,53E+08				1	1																2	2
17	O-RING		456G	BUNA N	1	M149483/4	5,01E+08				1	1																2	2
	SPRING		---	F-1410	1	M149483/4	5,03E+08				8	8																16	8
	BREATHER		---	F-1110	1	M149483/4	5,04E+08				1	1																2	1
	BEARING NUT		---	F-1120	1	M149483/4	5,02E+08				1	1																2	1
	BEARING LOCK WASHER		---	F-1120	1	M149483/4	5E+08				1	1																2	1
	OIL LEVEL INDICATOR		---	---	1	M149483/4	5,01E+08				1	1																2	1

NOTES (1) THE PROPOSAL FOR SPARE PARTS SHALL BE EXTENSIVE TO ALL EQUIPMENT OFFERED AND/OR SUPPLIED BY THE SUPPLIER
(2) ALL SECTION DRAWINGS REFERENCED SHALL BE TRANSMITTED WITH THE SPARE PARTS PROPOSAL
(3) ALL SPARE PARTS SUPPLIED SHALL BE DULY LABELLED, CORRECTLY IDENTIFIED AND APPROPRIATELY PACKED

PRICES WX-WORKS, PACKING INCLUDED
VALIDITY : 90 DAYS

TYPE OF EQUIPMENT	TYPE OF LUBRICANT	QUANTITY	FREQUENCY OF COMPLETION	FREQUENCY OF REPLACEMENT	PROPOSED MANUFACTURERS	COMMERCIAL NAME	SPECIFICATION	REMOVING / INSPECTION / CLEANING INSTRUCTIONS
IP MOTORS	GREASE	Drive end bearing: 80 gr Non drive end bearing: 80 gr	only replacement	1000 hours	ESSO, SHELL	ESSO UNIREX LITHIUM N3	grease	MOTOR MANUAL
HP MOTORS	OIL	Drive end bearing: 4.2l Non drive end bearing: 2.4l	only replacement	(*)	ESSO, SHELL	SHELL Tegula Oel 32 / SHELL Tellus Oel 32	ISO VG32	MOTOR MANUAL
CONDENSATE MOTORS	GREASE	Upper bearing: 220 gr Lower bearing: 140 gr	only replacement	Upper bearing: 1500 hours Lower bearing: 1000 hours	ESSO, SHELL	ALVANIA R3 GREASE (Shell)	grease	MOTOR MANUAL
IP PUMPS	OIL	4 l	only replacement	3000 hours	ESSO, SHELL	SHELL Tegula Oel 32 / SHELL Tellus Oel 32	ISO VG32	PUMP MANUAL
HP PUMPS	OIL	(voith)	only replacement	(*)	ESSO, SHELL	SHELL Tegula Oel 32 / SHELL Tellus Oel 32	ISO VG32	PUMP MANUAL
CONDENSATE PUMPS	OIL	9 l	only replacement	3000 hours	ESSO, SHELL	SHELL Tegula Oel 32 / SHELL Tellus Oel 32	ISO VG32	PUMP MANUAL
VSC	OIL	500 l (**)	only replacement	(*)	CASTROL, SHELL	CASTROL Hyspin SP 32 / SHELL tegula Oel 32 / SHELL Tellus Oel 32	ISO VG32	VOITH MANUAL
CIRCULATING WATER PUMPS	OIL	12 l	only replacement	3000 hours	ESSO, SHELL	SHEEL CASSIDA FLUID HF 32	ISO VG32	PUMP MANUAL
CIRCULATING WATER MOTORS	GREASE	Upper bearing: 450 gr Lower bearing: 180 gr	only replacement	3000 hours	ESSO, SHELL	ALVANIA R3 GREASE (Shell)	grease	MOTOR MANUAL

(*) Min. Every 9000 hours and must verify with analysis every year
(**) 500 l for each unit. Recommend for the Start Up to have available at least 1500l in total for both units

Special Tools

"No special tools are necessary for these pumps, understood by Special Tools those that are not commercial items and that are especifically designed for these pumps"

"PLEASE REFER TO OFICIAL COMMUNICATION FPD-MET-BCP-133 SENT ON 10/12/04"

UNIT V MAIN PUMPS MAINTENANCE WORKS TIME SCHEDULE

A/A	DESCRIPTION OF MAINTENANCE WORKS	26-Sep	27-Sep	28-Sep	29-Sep	30-Sep	1-Oct	2-Oct	3-Oct	4-Oct	5-Oct	6-Oct	7-Oct	8-Oct	9-Oct	10-Oct	11-Oct	12-Oct	13-Oct	14-Oct	15-Oct	16-Oct	17-Oct	18-Oct	19-Oct	20-Oct	21-Oct	22-Oct	23-Oct	24-Oct	25-Oct	26-Oct	27-Oct	28-Oct	29-Oct	30-Oct	31-Oct	1-Nov	2-Nov	3-Nov	4-Nov	5-Nov	6-Nov	7-Nov	8-Nov	9-Nov	10-Nov	11-Nov	12-Nov	13-Nov	14-Nov	15-Nov	16-Nov	17-Nov	18-Nov	19-Nov	20-Nov	21-Nov	22-Nov	23-Nov	24-Nov	25-Nov	26-Nov	27-Nov	REMARKS
A	CIRCULATING SEA WATER PUMP 1 (CSWP1)																																																																			
A.1	CWP1 AT SITE DISMANTLING WORKS																																																																			
A.2	CSWP 1 DISASSEMBLY-INSPECTION AND REASSEMBLY AT SUBCONTRACTOR FACILITIES																																																																			
A.3	CSWP 1 INSTALLATION WORKS AT SITE																																																																			
A.4	TRIAL RUN-COMISSIONING																																																																			
B	CONDENSATION EXTRACTION WATER PUMP 1 (CEWP1)																																																																			
B.1	CEWP1 AT SITE DISMANTLING WORKS AS THESE ARE DESCRIBED IN A.1																																																																			
B.2	CEWP 1 DISASSEMBLY-INSPECTION AND REASSEMBLY AT SUBCONTRACTOR FACILITIES																																																																			
B.3	CEWP 1 ERECTION-INSTALLATION WORKS																																																																			
B.4	TRIAL RUN-COMISSIONING																																																																			
C	HP BOILER FEED WATER PUMP 1 (HP FWP1)																																																																			
C.1	HP FWP1 AT SITE DISMANTLING WORKS																																																																			
C.2	HP FWP 1 DISASSEMBLY-INSPECTION AND REASSEMBLY AT SUBCONTRACTOR FACILITIES																																																																			
C.3	HP FWP 1 ERECTION-INSTALLATION WORKS																																																																			
C.4	TRIAL RUN-COMISSIONING																																																																			
D	IP FEEDWATER PUMP 1(IP FWP 1)																																																																			
D.1	IP FWP1 AT SITE DISMANTLING WORKS																																																																			
D.2	IP FWP1 DISASSEMBLY-INSPECTION AND REASSEMBLY AT SUBCONTRACTOR FACILITIES																																																																			
D.3	IP FWP1 ERECTION-INSTALLATION WORKS																																																																			
D.4	TRIAL RUN-COMISSIONING																																																																			
E	CIRCULATING SEA WATER PUMP 2 (CSWP2)																																																																			
E.1	CWP2 AT SITE DISMANTLING WORKS																																																																			
E.2	CSWP 2 DISASSEMBLY-INSPECTION AND REASSEMBLY AT SUBCONTRACTOR FACILITIES																																																																			
E.3	CSWP 2 INSTALLATION WORKS AT SITE																																																																			
E.4	TRIAL RUN-COMISSIONING																																																																			
F	IP FEEDWATER PUMP 2(IP FWP 2)																																																																			
F.1	IP FWP2 AT SITE DISMANTLING WORKS																																																																			
F.2	IP FWP2 DISASSEMBLY-INSPECTION AND REASSEMBLY AT SUBCONTRACTOR FACILITIES																																																																			
F.3	IP FWP2 ERECTION-INSTALLATION WORKS																																																																			
F.4	TRIAL RUN-COMISSIONING																																																																			
G	CONDENSATION EXTRACTION WATER PUMP 1 (CEWP1)																																																																			
G.1	CEWP1 AT SITE DISMANTLING WORKS AS THESE ARE DESCRIBED IN A.1																																																																			
G.2	CEWP 1 DISASSEMBLY-INSPECTION AND REASSEMBLY AT SUBCONTRACTOR FACILITIES																																																																			
G.3	CEWP 1 ERECTION-INSTALLATION WORKS																																																																			
G.4	TRIAL RUN-COMISSIONING																																																																			

Υποστηρικτικές Λειτουργίες

Διεύθυνση Προμηθειών Λειτουργιών Παραγωγής

Αριθμός Πρόσκλησης : **ΔΠΛΠ 1668**

Αντικείμενο: «Μηχανουργική υποστήριξη συντήρησης συγκροτημάτων μέσης ισχύος μονάδας V ΑΗΣ Κερατέας-Λαυρίου»

ΓΕΝΙΚΟΙ ΟΡΟΙ ΣΥΜΒΑΣΗΣ ΥΠΗΡΕΣΙΩΝ

ΤΕΥΧΟΣ 5 ΑΠΟ 7

Άρθρο 1
Ορολογία - Ορισμοί

Κατά την ερμηνεία της Σύμβασης ή κατά τη διεξαγωγή οποιασδήποτε σχετικής προς τη Σύμβαση αλληλογραφίας, οι ακόλουθοι όροι θα έχουν την παρακάτω έννοια:

- Εταιρεία: Η Δημόσια Επιχείρηση Ηλεκτρισμού Α.Ε. (ΔΕΗ)

- Αντισυμβαλλόμενος: Είναι το νομικό ή φυσικό πρόσωπο στο οποίο ανατέθηκε με Σύμβαση η παροχή υπηρεσιών.

- Σύμβαση: Είναι η γραπτή συμφωνία μεταξύ της Εταιρείας και του Αντισυμβαλλόμενου για την παροχή των Υπηρεσιών. Στον όρο αυτό συμπεριλαμβάνονται και τα τυχόν συμπληρώματα της Σύμβασης.

- Συμβαλλόμενοι/ Αντισυμβαλλόμενοι: Είναι η Εταιρεία και ο Αντισυμβαλλόμενος.

- Παροχή Υπηρεσιών: Είναι το αντικείμενο της Σύμβασης, όπως αυτό προσδιορίζεται στο Συμφωνητικό.

- Ελαττώματα: Είναι όλες ανεξαιρέτως οι επιζήμιες παρεκκλίσεις του Αντισυμβαλλόμενου από τα οριζόμενα στη Σύμβαση ή η έλλειψη προβλεπομένων από τη Σύμβαση ιδιοτήτων των παρεχομένων υπηρεσιών ή μέρους αυτών από όσα έχουν συμφωνηθεί με τη Σύμβαση, τα σφάλματα ή και οι εσφαλμένοι υπολογισμοί, οποιοδήποτε σφάλμα ή οποιαδήποτε ατέλεια, όπως αυτά νοούνται σύμφωνα με τους κανόνες της επιστήμης και τεχνικής, καθώς και οποιαδήποτε παράλειψη του Αντισυμβαλλόμενου ως προς τις παρεχόμενες υπηρεσίες και οποιαδήποτε νομικά ελαττώματα.

Άρθρο 2
Γλώσσα - Αλληλογραφία και Έγγραφα

2.1 Η επίσημη γλώσσα της Σύμβασης είναι η Ελληνική.
Τεχνικές Προδιαγραφές και διάφορα άλλα τεχνικά στοιχεία της Σύμβασης μπορεί, κατά την κρίση της ΔΕΗ, να είναι συνταγμένα στην Αγγλική γλώσσα.

2.2 Η μεταξύ της Εταιρείας και του Αντισυμβαλλόμενου αλληλογραφία θα γίνεται στην Ελληνική γλώσσα μέσω της αρμόδιας κατά περίπτωση Διεύθυνσης της ΔΕΗ, όπως ορίζεται στους Ειδικούς Όρους της Σύμβασης.
Σε επείγουσες περιπτώσεις και εφόσον τούτο κρίνεται αναγκαίο, η αλληλογραφία μπορεί να διεξάγεται στην Αγγλική γλώσσα υπό την απαραίτητη προϋπόθεση ότι θα ακολουθεί και το επίσημο ελληνικό κείμενο.

2.3 Λέξεις ή φράσεις που σημειώνονται στα συντασσόμενα από τον Αντισυμβαλλόμενο σχέδια, πίνακες, πινακίδες ή διαγράμματα καθώς και υποβαλλόμενα τεχνικά έντυπα μπορεί να είναι συνταγμένα στην Αγγλική γλώσσα.

2.4 Οι εγκρίσεις της Εταιρείας που δίνονται στον Αντισυμβαλλόμενο, καθώς και η αλληλογραφία, μπορεί να γίνουν και με τηλεομοιοτυπία (fax) ή με ηλεκτρονικά μέσα (π.χ. e-mail), υπό προϋποθέσεις που ορίζονται στους Ειδικούς Όρους. Στην περίπτωση αυτή, η ημερομηνία των απεσταλμένων με τα ανωτέρω μέσα κειμένων θα θεωρείται ως η ημερομηνία της έγκρισης ή της αλληλογραφίας.

Άρθρο 3
Εκπροσώπηση της Εταιρείας

3.1 Η διοίκηση, η παρακολούθηση και ο έλεγχος των παρεχομένων υπηρεσιών ασκούνται από την Εταιρεία, μέσω των αρμοδίων Διευθύνσεων της ΔΕΗ στις οποίες ή για λογαριασμό των οποίων παρέχονται οι εκάστοτε υπηρεσίες. Στα καθήκοντα περιλαμβάνονται η παρακολούθηση και ο έλεγχος της ποιότητας των παρεχομένων υπηρεσιών και της ποσότητας αυτών και γενικά η τήρηση των όρων της Σύμβασης από τον Αντισυμβαλλόμενο.

3.2 Η άσκηση των καθηκόντων των αρμοδίων οργάνων της Εταιρείας ως προς την εκτέλεση της Σύμβασης δεν μειώνει σε καμία περίπτωση τις ευθύνες του Αντισυμβαλλόμενου σύμφωνα με τις διατάξεις της ισχύουσας Νομοθεσίας και τη Σύμβαση.

Άρθρο 4
Εκπροσώπηση του Αντισυμβαλλόμενου

Κατά την υπογραφή της Σύμβασης ο Αντισυμβαλλόμενος γνωστοποιεί στην Εταιρεία τον εκπρόσωπό του, ο οποίος θα είναι νόμιμα εξουσιοδοτημένος να τον εκπροσωπεί σε όλα τα θέματα που αφορούν στην εκτέλεση της Σύμβασης και να προβαίνει, εξ ονόματός του, στην τακτοποίηση όλων των διαφορών και διαφωνιών που ενδεχομένως θα αναφύονται.

Άρθρο 5
Υποκατάσταση και υπεργολαβίες

5.1 Υποκατάσταση

5.1.1 Ο Αντισυμβαλλόμενος δεν δικαιούται να υποκαταστήσει τον εαυτό του με οποιοδήποτε τρίτο φυσικό ή νομικό πρόσωπο, στην εκτέλεση της Σύμβασης, ή οποιουδήποτε μέρους της, χωρίς προηγούμενη έγγραφη έγκριση της Εταιρείας.
Εξαιρείται η περίπτωση κατά την οποία ο Αντισυμβαλλόμενος υποκαθίσταται από ένα νέο Αντισυμβαλλόμενο συνεπεία είτε:

α. κατηγορηματικής ρήτρας της Σύμβασης,
β. καθολικής ή μερικής διαδοχής του αρχικού Αντισυμβαλλόμενου, λόγω εταιρικής αναδιάρθρωσης, περιλαμβανομένης της εξαγοράς, της απορρόφησης, της συγχώνευσης ή καταστάσεων αφερεγγυότητας, ιδίως στο πλαίσιο προπτωχευτικών ή πτωχευτικών διαδικασιών από άλλον ενδιαφερόμενο ο οποίος πληροί τα κριτήρια επιλογής που καθορίστηκαν στη Πρόσκληση βάσει της οποίας καταρτίστηκε η Σύμβαση, με την προϋπόθεση ότι η διαδοχή δεν συνεπάγεται άλλες ουσιώδεις τροποποιήσεις της σύμβασης,

υπό τον όρο ότι ο νέος Αντισυμβαλλόμενος θα αναλάβει όλα τα από τη Σύμβαση δικαιώματα και όλες τις από αυτή υποχρεώσεις του Αντισυμβαλλόμενου έναντι της Εταιρείας, μετά από έγγραφη ειδοποίηση προς την Εταιρεία και απόδειξη του γεγονότος.
Στην περίπτωση υποκατάστασης θα υπογραφεί από μέρους όλων των ενδιαφερομένων μερών Συμπλήρωμα της Σύμβασης και θα αντικατασταθούν οι Εγγυητικές Επιστολές της Σύμβασης.

5.1.2 Σε περίπτωση που πτωχεύσουν ή τεθούν υπό αναγκαστική διαχείριση μέλη Σύμπραξης/Ενωσης, τα εναπομείναντα μέλη υποχρεούνται να ολοκληρώσουν την εκτέλεση Σύμβασης και να αναλάβουν όλες τις υποχρεώσεις των πτωχευσάντων ή των τεθέντων υπό αναγκαστική διαχείριση μελών, όπως αυτές απορρέουν από τη Σύμβαση.

5.1.3 Σε περίπτωση έγκρισης από την Εταιρεία της υποκατάστασης, ολικά ή μερικά, του Αντισυμβαλλόμενου, ο Αντισυμβαλλόμενος δεν απαλλάσσεται από τις ευθύνες και υποχρεώσεις του που απορρέουν από τη Σύμβαση, αλλά θα παραμένει απευθείας και εξολοκλήρου υπεύθυνος για όλες τις πράξεις ή παραλείψεις του Υποκαταστάτη, ή του προσωπικού του, ωσάν αυτές οι πράξεις ή παραλείψεις να οφείλονταν στον ίδιο τον Αντισυμβαλλόμενο.
Στην περίπτωση υποκατάστασής του και εις ολόκληρον ευθύνης του από κοινού με τον Υποκαταστάτη του, ο Αντισυμβαλλόμενος παραιτείται ανεπιφύλακτα του δικαιώματος της διζήσεως.
Η παραίτηση αυτή, αναφορικά με τους Υποκαταστάτες, πρέπει επίσης να αναφέρεται σε όλες τις Συμβάσεις υποκατάστασης που συνάπτει ο Αντισυμβαλλόμενος. Επίσης, στις εν λόγω Συμβάσεις των Υποκαταστατών με τον Αντισυμβαλλόμενο, πρέπει να αναφέρεται ότι οι Υποκαταστάτες, κατά την εκτέλεση της Σύμβασης, θα ευθύνονται καθένας πλήρως και από κοινού, αδιαίρετα και εις ολόκληρον μαζί με τον Αντισυμβαλλόμενο, έναντι της Εταιρείας για το αντικείμενο της αντίστοιχης υποκατάστασης.

5.2 Υπεργολάβοι/Υποπρομηθευτές

5.2.1 Ως Υπεργολάβοι ή Υποπρομηθευτές του Αντισυμβαλλόμενου νοούνται αυτοί που έχουν αναλάβει από τον Αντισυμβαλλόμενο την υλοποίηση τμήματος της Σύμβασης, με έγγραφη σύμβαση υπηρεσιών.

5.2.2 Ο Αντισυμβαλλόμενος είναι ελεύθερος να διαλέξει τους Υπεργολάβους και Υποπρομηθευτές του με δική του ευθύνη και με τις εξής προϋποθέσεις:

α. Οι υποψήφιοι Υπεργολάβοι και Υποπρομηθευτές θα είναι έμπειροι και αξιόπιστοι ενδιαφερόμενοι.

β. Η επιλογή κάποιου Υπεργολάβου ή Υποπρομηθευτή για κύρια τμήματα της Σύμβασης θα υπόκειται στην έγκριση της Εταιρείας. Η έγκριση αυτή θα αφορά μόνο στην από τεχνικής πλευράς εμπειρία και αξιοπιστία τους. Τα κύρια τμήματα της Σύμβασης, για τα οποία η Εταιρεία θα ζητήσει την έγκριση των Υπεργολάβων ή Υποπρομηθευτών, καθώς και τα απαραίτητα δικαιολογητικά για την απόδειξη της εμπειρίας και αξιοπιστίας των αναφέρονται στους Ειδικούς Όρους.

γ. Στην περίπτωση που ο Αντισυμβαλλόμενος επιθυμεί να αντικαταστήσει κάποιον εγκεκριμένο Υπεργολάβο ή Υποπρομηθευτή του, θα μπορεί να το κάνει μόνο με τη συγκατάθεση της Εταιρείας.

5.2.3 Η παραπάνω διαδικασία δεν είναι απαραίτητη σε περίπτωση που οι Υπεργολάβοι και Υποπρομηθευτές αναφέρονται στη Σύμβαση, οπότε τα παραπάνω στοιχεία έχουν ήδη υποβληθεί και εγκριθεί από την Εταιρεία.
Σε περίπτωση πάντως που ο Αντισυμβαλλόμενος θέλει να αντικαταστήσει κάποιον από τους Υπεργολάβους και τους Υποπρομηθευτές αυτούς, θα πρέπει να ζητήσει την έγκριση της ΔΕΗ, σύμφωνα με την παραπάνω παράγραφο 5.2.2.γ.

5.2.4. Μετά τη σύναψη της Σύμβασης και το αργότερο πριν την έναρξη της εκτέλεσής της σε εγκαταστάσεις της ΔΕΗ υπό την άμεση εποπτεία της, ο Αντισυμβαλλόμενος οφείλει να αναφέρει στην Εταιρεία το όνομα, τα στοιχεία επικοινωνίας και τους νόμιμους εκπροσώπους των υπεργολάβων του, οι οποίοι συμμετέχουν στις εν λόγω υπηρεσίες, εφόσον δεν συμπεριλαμβάνονται στη Σύμβαση και είναι γνωστά τη συγκεκριμένη χρονική στιγμή. Ο Αντισυμβαλλόμενος οφείλει να γνωστοποιεί στη ΔΕΗ κάθε αλλαγή των ως άνω πληροφοριών κατά τη διάρκεια της Σύμβασης καθώς και τις απαιτούμενες

πληροφορίες σχετικά με κάθε νέο υπεργολάβο τον οποίο ο Αντισυμβαλλόμενος χρησιμοποιεί εν συνεχεία στις εν λόγω υπηρεσίες.

5.2.5 Σε κάθε περίπτωση εκτέλεσης μέρους της Σύμβασης με Υπεργολάβους, ο Αντισυμβαλλόμενος δεν απαλλάσσεται από τις ευθύνες και υποχρεώσεις του που απορρέουν από τη Σύμβαση, αλλά θα παραμένει απευθείας και εξολοκλήρου υπεύθυνος για όλες τις πράξεις ή παραλείψεις των Υπεργολάβων ή του προσωπικού τους, ωσάν αυτές οι πράξεις ή παραλείψεις να οφείλονταν στον ίδιο τον Αντισυμβαλλόμενο.

5.3 Ανάληψη από τη ΔΕΗ υποχρεώσεων του Αντισυμβαλλόμενου προς Υπεργολάβους/ Υποπρομηθευτές του

Η Εταιρεία δύναται βάσει ρητού όρου της Σύμβασης ή μετά από συμφωνία με τον Αντισυμβαλλόμενο, κατόπιν αιτήσεως του Υπεργολάβου/Υποπρομηθευτή και όταν το επιτρέπει η φύση της σύμβασης, να αναλαμβάνει τις υποχρεώσεις του Αντισυμβαλλόμενου έναντι Υπεργολάβων/Υποπρομηθευτών του, σύμφωνα με τα προβλεπόμενα στην παράγραφο 18.9 του παρόντος τεύχους.
Στις ως άνω υποχρεώσεις συμπεριλαμβάνεται και η καταβολή απευθείας στον υπεργολάβο της οφειλόμενης αμοιβής του για την παροχή υπηρεσίας, δυνάμει σύμβασης υπεργολαβίας με τον Αντισυμβαλλόμενο. Στην περίπτωση αυτή, στους ειδικούς όρους της Σύμβασης ή σε σχετικό συμπλήρωμά της καθορίζονται τα ειδικότερα μέτρα ή μηχανισμοί που επιτρέπουν στον Αντισυμβαλλόμενο να εγείρει αντιρρήσεις ως προς αδικαιολόγητες πληρωμές καθώς και οι ρυθμίσεις που αφορούν αυτόν τον τρόπο πληρωμής.
Η ανάληψη των υποχρεώσεων του παρόντος όρου από την Εταιρεία σε καμία περίπτωση δεν αίρει την ευθύνη του Αντισυμβαλλόμενου.

Άρθρο 6
Εκχώρηση

6.1 Απαγορεύεται, είναι άκυρη και χωρίς νομικό αποτέλεσμα για την Εταιρεία, η εκχώρηση από τον Αντισυμβαλλόμενο σε οποιοδήποτε τρίτο φυσικό ή νομικό πρόσωπο, οποιασδήποτε απαίτησης ή δικαιώματος που μπορεί να έχει κατά της Εταιρείας και προκύπτει από τη Σύμβαση ή σε σχέση με αυτή, εάν γίνει χωρίς προηγούμενη έγγραφη έγκριση της ΔΕΗ.

6.2 Ειδικότερα, η εκχώρηση της καταβολής συμβατικών ποσών, το ύψος των οποίων θα καθορίζεται από την Εταιρεία και δεν θα υπερβαίνει το ογδόντα τοις εκατό (80%) του συμβατικού τιμήματος, θα πραγματοποιείται μετά την προαναφερθείσα έγκριση και με δικαίωμα της ΔΕΗ για περαιτέρω αφαίρεση:

6.2.1 Κάθε απαίτησης της ΔΕΗ, από οποιονδήποτε λόγο ή αιτία και εάν προέρχεται.
6.2.2 Κάθε οφειλής του Αντισυμβαλλόμενου προς οποιονδήποτε τρίτο, ο οποίος θα είχε το δικαίωμα να την εισπράξει από την Εταιρεία.
6.2.3 Κάθε οφειλής του Αντισυμβαλλόμενου προς το Δημόσιο που θα προέρχεται από τα Αποδεικτικά Φορολογικής και Ασφαλιστικής Ενημερότητας, των οποίων η προσκόμισή είναι απαραίτητη σύμφωνα με τη σύμβαση και την κείμενη νομοθεσία.
6.2.4 Κάθε οφειλής του Αντισυμβαλλόμενου προς το προσωπικό του που είχε απασχοληθεί στο πλαίσιο της Σύμβασης, η οποία έχει αναγγελθεί στη ΔΕΗ σύμφωνα με το άρθρο 702 του Αστικού Κώδικα.

6.3 Η πιο πάνω έγκριση εκχώρησης θα χορηγείται με την προϋπόθεση ότι:
- στη ζητούμενη σύμβαση εκχώρησης θα συμπεριλαμβάνονται απαραιτήτως οι ανωτέρω όροι, η μη διατύπωση των οποίων αποτελεί λόγο μη αποδοχής της εκ μέρους της ΔΕΗ και

- θα έχει άμεση και ευνοϊκή επίδραση στην πρόοδο της Σύμβασης.

6.4 Η πιο πάνω σύμβαση εκχώρησης θα θεωρείται έγκυρη εφόσον αποδεδειγμένα έχει κοινοποιηθεί στη ΔΕΗ.

Άρθρο 7
Γνώση των τοπικών συνθηκών

7.1 Ο Αντισυμβαλλόμενος βεβαιώνει ότι οι συμβατικές τιμές είναι αποτέλεσμα δικών του υπολογισμών και βασίζονται στη δική του γνώση και εκτίμηση των συνθηκών και κινδύνων που υπάρχουν και όχι σε οποιαδήποτε περιγραφή ή δήλωση της Εταιρείας.

7.2 Σε καμία περίπτωση ο Αντισυμβαλλόμενος δεν δικαιούται αποζημίωσης ή πρόσθετης αμοιβής για λόγους που αφορούν στις συνθήκες παροχής υπηρεσιών, πλην των ρητά αναφερομένων στη Σύμβαση.

Άρθρο 8
Προσωπικό του Αντισυμβαλλόμενου

8.1 Ο Αντισυμβαλλόμενος υποχρεούται να διαθέσει, με δική του ευθύνη και δαπάνες, το προσωπικό που απαιτείται, κατά περίπτωση υπηρεσίας, από τη ΔΕΗ για την εκπλήρωση των υποχρεώσεών του που προκύπτουν από τη Σύμβαση και είναι υπεύθυνος, δυνάμει του Αστικού και Ποινικού Ελληνικού Δικαίου, για όλες τις πράξεις ή και παραλείψεις του εν λόγω προσωπικού, που σχετίζονται με την παρούσα Σύμβαση.

8.2 Το προσωπικό που απασχολεί ο Αντισυμβαλλόμενος για την παροχή των υπηρεσιών ασχέτως ειδικότητας, πρέπει να είναι ικανό, ειδικευμένο και να έχει όλα τα προσόντα και τις προϋποθέσεις που προβλέπονται από την Ελληνική Νομοθεσία και τους σχετικούς Κανονισμούς.

8.3 Η Εταιρεία έχει το δικαίωμα να ζητά, με έγγραφη ειδοποίηση προς τον Αντισυμβαλλόμενο, την απομάκρυνση οποιουδήποτε μέλους του προσωπικού του (Έλληνα ή αλλοδαπού) που κρίνεται για οποιοδήποτε βάσιμο λόγο ως ακατάλληλο. Ο Αντισυμβαλλόμενος είναι υποχρεωμένος χωρίς αντιρρήσεις να απομακρύνει το μέλος αυτό του προσωπικού του με δικές του δαπάνες και δεν μπορεί να το ξαναχρησιμοποιήσει χωρίς προηγούμενη γραπτή έγκριση της Εταιρείας.

8.4 Στην περίπτωση που αποσύρεται ή απομακρύνεται ένα μέλος του προσωπικού του Αντισυμβαλλόμενου, ο Αντισυμβαλλόμενος δεν δύναται να επικαλεστεί την απομάκρυνση αυτή ως λόγο καθυστέρησης για την παροχή των υπηρεσιών του.

Άρθρο 9
Νυχτερινή, υπερωριακή εργασία- Εργασία τις αργίες και εορτές

9.1 Επιτρέπεται η εκτέλεση από τον Αντισυμβαλλόμενο νυχτερινής ή υπερωριακής εργασίας και εργασίας κατά τις αργίες και εορτές, σύμφωνα με όσα ορίζονται από τους Νόμους του Κράτους, εκτός αν υπάρχει ρητή απαγορευτική εντολή της Εταιρείας.
Στις περιπτώσεις αυτές, ο Αντισυμβαλλόμενος δεν δικαιούται πρόσθετης αποζημίωσης, υποχρεούται όμως να τηρεί όλους τους Νόμους και Κανονισμούς που αφορούν σε τέτοιες εργασίες.

9.2 Ο Αντισυμβαλλόμενος είναι υποχρεωμένος να ανακοινώνει στην αρμόδια Διεύθυνση της ΔΕΗ γραπτά, πριν από 24 τουλάχιστον ώρες, την πρόθεσή του να εκτελέσει εργασία νυχτερινή, υπερωριακή ή κατά τις αργίες και εορτές.

9.3 Αν ο Αντισυμβαλλόμενος δεν μπορέσει να εξασφαλίσει έγκριση από τις Αρμόδιες Αρχές για υπερωριακή εργασία, αυτό δεν θα αποτελέσει δικαιολογία για παράταση των προθεσμιών εκτέλεσης της Σύμβασης.
Ειδικά για την υπερωριακή εργασία, η Εταιρεία θα συνηγορεί, εφόσον κρίνεται απαραίτητο και δεν υπάρχει δυνατότητα χρησιμοποίησης περισσότερου προσωπικού, αλλά δεν μπορεί να εγγυηθεί την εξασφάλιση της σχετικής έγκρισης από τις αρμόδιες Αρχές.

9.4 Κατά την εκτέλεση της νυχτερινής εργασίας, ο Αντισυμβαλλόμενος υποχρεούται να παρέχει με δαπάνη του πρόσθετο και ικανοποιητικό φωτισμό για την ασφάλεια του προσωπικού του και παντός τρίτου, καθώς και κατάλληλα μέσα που να επιτρέπουν την καλή από κάθε άποψη και σωστή εκτέλεση των εργασιών.

9.5 Εάν για την τεχνική αρτιότητα των υπηρεσιών ή την εκπλήρωση των συμβατικών υποχρεώσεων του Αντισυμβαλλόμενου ή εξαιτίας άλλων περιορισμών στις ώρες εργασίας που επιβάλουν τρίτοι (Δημόσιες Υπηρεσίες, Δήμοι και Κοινότητες, σημαντικοί Καταναλωτές κ.λπ.) είναι αναγκαία, κατά την κρίση της Εταιρείας, η νυχτερινή ή υπερωριακή εργασία ή η εκτέλεση εργασίας κατά τις αργίες και εορτές, ο Αντισυμβαλλόμενος είναι υποχρεωμένος, μετά από σχετική εντολή, να την πραγματοποιεί χωρίς αντιρρήσεις και χωρίς καμία ιδιαίτερη αποζημίωση, εφόσον δεν προβλέπεται διαφορετικά στους Ειδικούς Όρους.

Άρθρο 10
Ευθύνες του Αντισυμβαλλόμενου – Περιορισμοί Ευθύνης Συμβαλλομένων

10.1 Ο Αντισυμβαλλόμενος ευθύνεται για την άρτια, πλήρη, εμπρόθεσμη, έντεχνη και σύμφωνη προς τους κανόνες της σύγχρονης επιστήμης και τεχνικής, παροχή των υπηρεσιών του σύμφωνα και με τους όρους της Σύμβασης.

10.2 Ο Αντισυμβαλλόμενος και οι Υπεργολάβοι του πρέπει να τηρούν τις υποχρεώσεις στους τομείς του περιβαλλοντικού, κοινωνικού και εργατικού δικαίου που έχουν θεσπιστεί από το δίκαιο της Ένωσης, το εθνικό δίκαιο, συλλογικές συμβάσεις ή σε σχετικές διεθνείς διατάξεις. Ειδικότερα οφείλουν να συμμορφώνονται αυστηρά προς τους ισχύοντες στην Ελλάδα σχετικούς Νόμους, Διατάγματα, Κανονισμούς και Αστυνομικές διατάξεις, και των σχετικών με την Υγεία και Ασφάλεια στην Εργασία και με την προστασία του περιβάλλοντος διατάξεων, έγγραφες διαταγές από Δημόσιες, Δημοτικές ή άλλες Αρχές, που θα αναφέρονται σε νόμιμες απαιτήσεις τους για την εκτέλεση εργασιών από τον Αντισυμβαλλόμενο, καθώς και προς τους Κανονισμούς και τις έγγραφες εντολές και οδηγίες της Εταιρείας, συμπεριλαμβανομένων των Κανονισμών Ασφαλείας της Εταιρείας.

Επίσης πρέπει να:

α. παρέχουν τις υπηρεσίες υπό ασφαλείς συνθήκες όσον αφορά τις εργασίες και όλο το απασχολούμενο σε αυτές προσωπικό, καθώς επίσης και τους τρίτους.
β. εκδίδουν με μέριμνά τους και δαπάνες τους κάθε άδεια που προβλέπεται από τους παραπάνω Νόμους και Διατάγματα, εκτός αν άλλως ορίζεται στους Ειδικούς Όρους της Σύμβασης.
γ. αναφέρουν αμέσως στην Εταιρεία και τις Αρμόδιες Αρχές και παίρνουν όλα τα αναγκαία μέτρα, σε περίπτωση ατυχήματος σε οποιοδήποτε άτομο ή ζημίας σε οποιαδήποτε ιδιοκτησία (συμπεριλαμβανομένων αυτών της Εταιρείας).
δ. αναφέρουν στην Εταιρεία οποιαδήποτε ζημιά των εγκαταστάσεών της ή απώλεια εξοπλισμού της.
ε. ανακοινώνουν στην Εταιρεία τις διαταγές που απευθύνονται ή κοινοποιούνται σε αυτούς κατά τη διάρκεια παροχής των υπηρεσιών και τα διάφορα έγγραφα των Αρχών, σχετικά με τα υποδεικνυόμενα μέτρα ελέγχου, ασφάλειας κ.λπ.

10.2 Ειδικότερα και μέχρι την Παραλαβή των Υπηρεσιών:

10.2.1 Ο Αντισυμβαλλόμενος ευθύνεται για την αποκατάσταση οποιουδήποτε ελαττώματος στις παρεχόμενες υπηρεσίες.

10.2.2 Επίσης ο Αντισυμβαλλόμενος ευθύνεται:

α. έναντι του προσωπικού της Εταιρείας, καθώς και έναντι του δικού του προσωπικού για ζημίες γενικά, στις οποίες συμπεριλαμβάνονται οι ζημιές σε ιδιοκτησία, οι σωματικές βλάβες ή και θάνατος οποιουδήποτε προσώπου, ακόμη και αυτών που δεν καλύπτονται από τα συνήθη ασφαλιστήρια συμβόλαια.

β. έναντι της Εταιρείας, για θετικές ζημίες ή άμεσες θετικές δαπάνες που θα υποστεί λόγω μη εκπληρώσεως από τον Αντισυμβαλλόμενο των συμβατικών του υποχρεώσεων ή που απορρέουν από ελαττώματα των παρεχομένων υπηρεσιών ή και από την εκτέλεση αυτών σύμφωνα με τη Σύμβαση.

10.3 Τέλος για κάθε μη εκπλήρωση ή πλημμελή εκπλήρωση των υποχρεώσεων του Αντισυμβαλλόμενου ή των Υπεργολάβων του, ευθύνεται αποκλειστικά ο Αντισυμβαλλόμενος και αναλαμβάνει κάθε σχετική ευθύνη που προκύπτει από τη Σύμβαση, είτε αστική είτε ποινική, έναντι της Εταιρείας και κάθε τρίτου.
Επίσης ο Αντισυμβαλλόμενος υποχρεούται να αναλάβει με δαπάνες του την υπεράσπιση της Εταιρείας σε κάθε τυχόν σχετική αγωγή και μήνυση, που θα εγείρει οποιοσδήποτε κατά της Εταιρείας ή/και του προσωπικού της, για λόγους που ανάγονται σε ενέργειες ή παραλείψεις του Αντισυμβαλλόμενου ή των Υποπρομηθευτών / Υπεργολάβων του ή και του Τρίτου. Οι δαπάνες αυτές θα επιστρέφονται στον Αντισυμβαλλόμενο σε περίπτωση που ήθελε τελεσιδίκως κριθεί ότι οι ως άνω ενέργειες ή παραλείψεις δεν εμπίπτουν στη σφαίρα ευθύνης του Αντισυμβαλλόμενου ή των Υποπρομηθευτών / Υπεργολάβων του ή και του Τρίτου.

10.4 Οι ευθύνες του Αντισυμβαλλόμενου για αποζημίωση της Εταιρείας, που απορρέουν από τη Σύμβαση δεν θα υπερβαίνουν το πενήντα τοις εκατό (50%) του Συμβατικού Τιμήματος, προσαυξανόμενου με το τίμημα των τυχόν πρόσθετων υπηρεσιών και των Συμπληρωμάτων της Σύμβασης καθώς και με τις αναθεωρήσεις τους, εκτός των περιπτώσεων κατά τις οποίες συντρέχει λόγος απόρριψης των υπηρεσιών, οπότε το ποσοστό αυτό δεν θα υπερβαίνει το εκατό τοις εκατό (100%) του ως άνω καθοριζομένου Συμβατικού Τιμήματος.
Οι ευθύνες της Εταιρείας για αποζημίωση του Αντισυμβαλλόμενου, που απορρέουν από τη Σύμβαση δεν θα υπερβαίνουν το πενήντα τοις εκατό (50%) του Συμβατικού Τιμήματος προσαυξανόμενου με το τίμημα των τυχόν πρόσθετων υπηρεσιών και των Συμπληρωμάτων της Σύμβασης καθώς και με τις αναθεωρήσεις τους.
Επιπλέον οι συμβαλλόμενοι συμφωνούν ότι δεν θα ευθύνονται έναντι αλλήλων για τυχόν έμμεσες δαπάνες ή/και αποθετικές ζημίες.

Άρθρο 11
Παραιτήσεις και Εγκρίσεις

11.1 Σε περίπτωση που η Εταιρεία επιλέξει να παραιτηθεί από οποιαδήποτε δικαιώματά της, που απορρέουν από τη Σύμβαση, σε σχέση με τον έλεγχο των παρεχόμενων υπηρεσιών ή τμήματός τους, ή στην περίπτωση που η Εταιρεία εγκρίνει οποιοδήποτε έγγραφο, σχέδιο ή ενέργεια του Αντισυμβαλλόμενου, η παραίτηση αυτή από δικαίωμα ή η παροχή έγκρισης κατ' ουδένα τρόπο απαλλάσσει τον Αντισυμβαλλόμενο των ευθυνών του, που απορρέουν από τη Σύμβαση.

11.2 Ο Αντισυμβαλλόμενος παραιτείται ρητά και ανεπιφύλακτα όλων των κατά τα άρθρα 325-329 και 1106 του Αστικού Κώδικα δικαιωμάτων του με την εξαίρεση των οριζομένων στην παράγραφο 18.4 του παρόντος τεύχους.
Επίσης παραιτείται εκτός των ανωτέρω διατάξεων του Αστικού Κώδικα και του άρθρου 388 του Αστικού Κώδικα ή /και των δικαιωμάτων του που απορρέουν από οποιοδήποτε άλλο Νόμο, διάταξη κ.λπ. που είναι σε ισχύ ή θα ισχύσει στο μέλλον και αφορούν σε αναθεώρηση ή /και αναπροσαρμογή του συμβατικού τιμήματος, έναντι του οποίου αυτός ανέλαβε την εκτέλεση της Σύμβασης και τούτο ανεξάρτητα οποιωνδήποτε τυχόν μεταβολών συνθηκών, εκτός αν ορίζεται διαφορετικά στη Σύμβαση, δοθέντος ότι τον κίνδυνο της απρόοπτης μεταβολής των συνθηκών τον θεωρεί ο Αντισυμβαλλόμενος ως ενδεχόμενο και τον αποδέχεται.
Στην έννοια της ανωτέρω απρόοπτης μεταβολής των συνθηκών δεν περιλαμβάνεται η τροποποίηση Νομοθεσίας σχετικά με την Προστασία του Περιβάλλοντος, στο βαθμό που με την τιμολόγηση που προβλέπεται στη Σύμβαση δεν καλύπτεται το κόστος των επιπλέον υπηρεσιών, που θα προκύψουν εξαιτίας των περιπτώσεων αυτών.

Άρθρο 12
Εγγυήσεις - Εγγυητικές Επιστολές

12.1 Ο Αντισυμβαλλόμενος εγγυάται την πιστή εκπλήρωση όλων των από τη Σύμβαση υποχρεώσεών του καθώς και την καλή και τεχνικά άρτια, σύμφωνα προς τους όρους της Σύμβασης και τους παραδεδεγμένους κανόνες της σύγχρονης επιστήμης, παροχή των υπηρεσιών του, ώστε αυτές να είναι κατάλληλες για τον σκοπό για τον οποίο συμφωνήθηκαν και προορίζονται, μέσα στις προθεσμίες που καθορίζονται στη Σύμβαση.

12.2 Σε περίπτωση μη τήρησης από τον Αντισυμβαλλόμενο των εγγυηθέντων από αυτόν, η Εταιρεία δικαιούται να ασκήσει όλα τα σχετικά δικαιώματα που της παρέχονται από τη Σύμβαση. Η μη άσκηση όμως από την Εταιρεία οποιουδήποτε από τα δικαιώματά της, δεν θα ερμηνεύεται ως παραίτηση της Εταιρείας από τα δικαιώματα αυτά.

12.3 Για την ακριβή, εμπρόθεσμη και πιστή εκπλήρωση των από τη Σύμβαση υποχρεώσεών του, συμπεριλαμβανομένων των υποχρεώσεών του προς τρίτους έναντι των οποίων η Εταιρεία τυχόν θα ευθύνεται σύμφωνα με τους Ελληνικούς Νόμους για καταβολή προστίμων και ποινικών ρητρών λόγω της μη εκπλήρωσης των υποχρεώσεων του Αντισυμβαλλόμενου, όπως αυτές απορρέουν από τη Σύμβαση, ο Αντισυμβαλλόμενος παρέχει εγγυήσεις που αποτελούνται:

α. Από την Εγγυητική Επιστολή Καλής Εκτέλεσης που κατατίθεται από τον Αντισυμβαλλόμενο κατά την υπογραφή της Σύμβασης.
β. Από την Εγγυητική Επιστολή Προκαταβολής που κατατίθεται για την ανάληψη από τον Αντισυμβαλλόμενο σχετικής προκαταβολής, αν προβλέπεται από τη Σύμβαση.

Τυχόν αποκλίσεις από τα επισυναπτόμενα υποδείγματα Εγγυητικών Επιστολών της Εταιρείας αξιολογούνται από την αρμόδια Διεύθυνση της ΔΕΗ, πριν την αποδοχή τους ή απόρριψη τους.

12.4 Εγγυητική Επιστολή Καλής Εκτέλεσης (ΕΕΚΕ)

12.4.1 Ο Αντισυμβαλλόμενος υποχρεούται να παράσχει στην Εταιρεία ΕΕΚΕ, σύμφωνα με υπόδειγμα της ΔΕΗ, που εκδίδεται με δαπάνες του, το ποσό της οποίας ορίζεται στο Συμφωνητικό.

12.4.2 Για οποιαδήποτε αύξηση του Συμβατικού Τιμήματος και εφόσον μια ή περισσότερες αυξήσεις μαζί υπερβαίνουν το δέκα τοις εκατό (10%) του Συμβατικού Τιμήματος, ο Αντισυμβαλλόμενος υποχρεούται να καταθέσει συμπληρωματικές ΕΕΚΕ.

12.4.3 Σε περίπτωση που ο Αντισυμβαλλόμενος αρνείται να καταθέσει τις ως άνω συμπληρωματικές ΕΕΚΕ, τότε η Εταιρεία δικαιούται να παρακρατεί τα αντίστοιχα ποσά από οποιαδήποτε πληρωμή προς τον Αντισυμβαλλόμενο, μέχρι την κατάθεση των Εγγυητικών Επιστολών.

12.4.4 Η Εταιρεία, κατά την κρίση της, δικαιούται να κηρύξει καταπεσούσα την ΕΕΚΕ, μερικά ή ολικά, λόγω οποιασδήποτε απαίτησής της κατά του Αντισυμβαλλόμενου, που απορρέει από τη Σύμβαση.

12.4.5 Με την προϋπόθεση ότι στο μεταξύ δεν θα συντρέξει λόγος για κατάπτωση, η ΕΕΚΕ θα επιστραφεί στον εκδότη της μετά την Παραλαβή των παρεχομένων Υπηρεσιών και την εκκαθάριση της Σύμβασης, σύμφωνα με τα οριζόμενα στο Συμφωνητικό. Η ΕΕΚΕ δεν θα επιστραφεί, εφόσον υπάρχουν απαιτήσεις της Εταιρείας κατά του Αντισυμβαλλόμενου, οπότε μπορεί να αντικατασταθεί από τον Αντισυμβαλλόμενο με άλλη που να καλύπτει τις εν λόγω απαιτήσεις.

12.4.6 Για την επιστροφή της ΕΕΚΕ, ο Αντισυμβαλλόμενος πρέπει να υποβάλει σχετική αίτηση στην Εταιρεία.

12.5 Παροχή Εγγυήσεων – έκδοση Εγγυητικών Επιστολών

Οι παραπάνω εγγυήσεις παρέχονται με τη μορφή Εγγυητικών Επιστολών, οι οποίες εκδίδονται με δαπάνες του Αντισυμβαλλόμενου, σύμφωνα με αντίστοιχα υποδείγματα της Εταιρείας, τους όρους, τις προϋποθέσεις και το ποσό που καθορίζονται στο Συμφωνητικό ή στους Ειδικούς Όρους της Σύμβασης και τα αναφερόμενα στις επόμενες παραγράφους.

12.5.1 Οι παραπάνω εγγυήσεις μπορούν να έχουν εκδοθεί από πιστωτικά ή χρηματοδοτικά ιδρύματα ή ασφαλιστικές εταιρείες κατά την έννοια των περιπτώσεων β και γ της παρ. 1 του άρθρου 14 του ν. 4364/2016, της αποδοχής της ΔΕΗ, την οποία η Εταιρεία δεν μπορεί να αρνηθεί αδικαιολόγητα, που λειτουργούν νόμιμα σε:

α. ένα κράτος – μέλος της Ευρωπαϊκής Ένωσης (Ε.Ε.), ή
β. ένα κράτος – μέλος του Ευρωπαϊκού Οικονομικού Χώρου (Ε.Ο.Χ.) ή
γ. τρίτες χώρες

και έχουν σύμφωνα με τις ισχύουσες διατάξεις, αυτό το δικαίωμα.

12.5.2 Μπορεί επίσης να εκδίδονται από το Ταμείο Μηχανικών Εργοληπτών Δημοσίων Έργων (Τ.Μ.Ε.Δ.Ε.) ή να παρέχονται με γραμμάτιο του Ταμείου Παρακαταθηκών και Δανείων με παρακατάθεση σε αυτό του αντίστοιχου χρηματικού ποσού.
Όταν παρέχονται με γραμμάτιο του Ταμείου Παρακαταθηκών και Δανείων δεν τυγχάνει εφαρμογής ο όρος : η εγγύηση παρέχεται ανέκκλητα και ανεπιφύλακτα, ο δε εκδότης παραιτείται του δικαιώματος της διαιρέσεως και της διζήσεως.

12.6 Ισχύς Εγγυητικών Επιστολών

Η διάρκεια ισχύος των ως άνω Εγγυητικών Επιστολών καθορίζεται στο Συμφωνητικό της Σύμβασης.
Η ισχύς αυτών των Εγγυητικών Επιστολών θα παρατείνεται πέραν της παραπάνω προθεσμίας, χωρίς καμία αντίρρηση, μετά από γραπτό αίτημα της ΔΕΗ που θα υποβληθεί πριν από την ημερομηνία λήξεως των Εγγυητικών Επιστολών αυτών. Σε περίπτωση μη συμμόρφωσης του Αντισυμβαλλόμενου η ΔΕΗ θα έχει το δικαίωμα να ζητήσει κατάπτωση των υπόψη Εγγυητικών Επιστολών.

Άρθρο 13
Προθεσμίες

13.1 Ο Αντισυμβαλλόμενος αναλαμβάνει την υποχρέωση να αποπερατώσει κάθε τμήμα, καθώς και το σύνολο των υπηρεσιών, μέσα στις προθεσμίες που καθορίζονται στο Συμφωνητικό και να συμμορφώνεται με το Πρόγραμμα Εκτέλεσης της Σύμβασης.

13.2 Ο Αντισυμβαλλόμενος υποχρεούται να λάβει όλα τα αναγκαία μέτρα για την αποφυγή κάθε καθυστέρησης.
Αν ο Αντισυμβαλλόμενος δεν τηρήσει οποιεσδήποτε από τις εγκεκριμένες προθεσμίες, τμηματικές ή συνολική, θα εφαρμόζονται τα προβλεπόμενα στο άρθρο 21 του παρόντος τεύχους σε σχέση με τις Ποινικές Ρήτρες για καθυστερήσεις και θα επέρχονται οι συνέπειες που προβλέπονται στο ίδιο άρθρο.

13.3 Σε περίπτωση υπέρβασης της συμβατικής προθεσμίας (τμηματικής ή συνολικής), κατά χρονικό διάστημα τέτοιο που να εξαντλείται το αντίστοιχο ανώτατο όριο των Ποινικών Ρητρών που επιβάλλονται για καθυστερήσεις, ανεξάρτητα από την επιβολή των Ποινικών Ρητρών η ΔΕΗ δικαιούται να εφαρμόζει τα προβλεπόμενα στις διατάξεις του άρθρου 25 του παρόντος τεύχους περί καταγγελίας της Σύμβασης. Στην περίπτωση αυτή η καταγγελία θα θεωρείται ότι οφείλεται σε υπαιτιότητα του Αντισυμβαλλόμενου.
Το δικαίωμά της αυτό η ΔΕΗ μπορεί να το ασκήσει και πριν από την παρέλευση της πιο πάνω προθεσμίας εάν προδήλως προκύπτει ότι η Σύμβαση δεν μπορεί να εκτελεστεί έγκαιρα.

13.4 Οι προθεσμίες θα παρατείνονται από την Εταιρεία για όσο χρόνο κρίνεται εύλογο, εφόσον οι καθυστερήσεις προέκυψαν, είτε από λόγους που δεν αφορούν στον Αντισυμβαλλόμενο, είτε οφείλονται σε Ανωτέρα Βία, όπως αυτή καθορίζεται στο άρθρο 23 του παρόντος τεύχους.

13.5 Ρητά καθορίζεται ότι η Εταιρεία δεν υποχρεούται να προχωρήσει σε καμία τροποποίηση των προθεσμιών, αν ο Αντισυμβαλλόμενος δεν προβεί στις ακόλουθες ενέργειες:

α. Ειδοποιήσει εγγράφως την Εταιρεία ότι προτίθεται να ζητήσει παράταση προθεσμίας, μέσα σε ανατρεπτική προθεσμία δεκαπέντε (15) ημερών από τότε που εμφανίστηκε κάποιο γεγονός το οποίο δικαιολογεί την παράταση.

β. Αποστείλει μέσα σε προθεσμία δέκα (10) ημερών, από τη λήξη του γεγονότος, έγγραφη έκθεση για την ακριβή φύση και έκταση του γεγονότος, όπως επίσης και για τις επιπτώσεις του στην παροχή των υπηρεσιών. Στην έκθεση θα περιλαμβάνεται και λεπτομερής αιτιολόγηση της παράτασης την οποία ζητά, κατά τέτοιο τρόπο ώστε η έκθεσή του να διερευνηθεί έγκαιρα.

Άρθρο 14
Τροποποιήσεις της Σύμβασης κατά τη διάρκειά της

14.1 Οποιαδήποτε τροποποίηση της Σύμβασης πρέπει να είναι τέτοιας μορφής που δεν θίγει ουσιωδώς τον ανταγωνισμό.

14.1 Η Εταιρεία στο πλαίσιο της παρούσας Σύμβασης, δικαιούται να τροποποιεί τη Σύμβαση, ιδίως, στις παρακάτω περιπτώσεις:

14.2.1 Λόγω άσκησης δικαιωμάτων προαίρεσης

Σε εφαρμογή των προβλεπομένων σε ιδιαίτερο άρθρο του Συμφωνητικού της Σύμβασης τυχόν δικαιωμάτων προαίρεσης. Σε καταφατική περίπτωση, στο εν

λόγω άρθρο, περιγράφονται με σαφήνεια και ακρίβεια το αντικείμενο, η φύση και η έκταση των προαιρέσεων καθώς και οι όροι υπό τους οποίους μπορούν να ενεργοποιηθούν. Τα δικαιώματα αυτά καθορίζονται και ασκούνται με τρόπο που δεν μεταβάλει τη συνολική φύση της Σύμβασης.

14.2.2 Λόγω εκτέλεσης πρόσθετων ή/και συναφών υπηρεσιών ή τροποποιήσεων που δεν είχαν προβλεφθεί στην αρχική Σύμβαση

14.2.2.1 Κατά τη διάρκεια εκτέλεσης της Σύμβασης και για τη διασφάλιση της αρτιότητας και της λειτουργικότητάς του αντικειμένου της η Εταιρεία δικαιούται:

α. να επιφέρει οποιεσδήποτε μεταβολές στη μορφή, στην ποιότητα, στο είδος και στην ποσότητα οποιουδήποτε τμήματος της Σύμβασης, συμπεριλαμβανομένης της δυνατότητας να παραλείψει οποιοδήποτε τμήμα της, με ανάλογη μεταβολή του Συμβατικού Τιμήματος, χωρίς ο Αντισυμβαλλόμενος να δικαιούται να ζητήσει αύξηση των τιμών μονάδας ή να εγείρει άλλες απαιτήσεις,

β. να αναθέτει στον Αντισυμβαλλόμενο την εκτέλεση νέων συμπληρωματικών υπηρεσιών, συμπεριλαμβανομένης της εκπόνησης τυχόν απαιτούμενων μελετών, οι οποίες καθίστανται αναγκαίες ή/και απαραίτητες και δεν περιλαμβάνονται στη διαδικασία σύναψης της αρχικής Σύμβασης, από προφανείς παραλείψεις ή σφάλματα της προμέτρησης της μελέτης ή από απαιτήσεις της αρτιότητας των υπηρεσιών παρά την πλήρη εφαρμογή των σχετικών απαιτήσεων κατά την κατάρτιση των όρων της Σύμβασης, εφόσον:

βα) δεν μπορούν να διαχωριστούν από την παρούσα Σύμβαση για οικονομικούς ή τεχνικούς λόγους, παραδείγματος χάριν απαιτήσεις εναλλαξιμότητας ή διαλειτουργικότητας με τον υφιστάμενο εξοπλισμό, υπηρεσίες ή εγκαταστάσεις που παρασχέθηκαν με την αρχική σύμβαση, χωρίς να δημιουργηθούν μείζονα προβλήματα για την Εταιρεία ή όταν αυτές οι υπηρεσίες, μολονότι μπορούν να διαχωριστούν από την παρούσα Σύμβαση, είναι απολύτως απαραίτητες για την ολοκλήρωση της παρούσας Σύμβασης και

ββ) ο διαχωρισμός τους θα συνεπαγόταν σημαντικά προβλήματα ή ουσιαστική αύξηση δαπανών για την Εταιρεία.

14.2.2.2 Οι ως άνω μεταβολές μπορούν να εκτελούνται εντός των ορίων του αρχικού συμβατικού τιμήματος, συμπεριλαμβανομένου του τυχόν συμβολαιοποιημένου κονδυλίου απροβλέπτων δαπανών, όπως αυτό ορίζεται στο Συμφωνητικό της Σύμβασης, χωρίς υπογραφή συμπληρωματικής σύμβασης.
Σε περίπτωση που οι υπόψη μεταβολές συνεπάγονται αύξηση του συνολικού συμβατικού τιμήματος τότε αυτές ανατίθενται στον Αντισυμβαλλόμενο με συμπληρωματική σύμβαση.
Ο Αντισυμβαλλόμενος υποχρεούται να εκτελεί τις μεταβολές χωρίς να δικαιούται να ζητήσει αύξηση των συμβατικών τιμών μονάδας ή να εγείρει άλλες απαιτήσεις.

Εφόσον από τις μεταβολές κατά την εκτέλεση της Σύμβασης προκύπτει μείωση του αρχικού συμβατικού τιμήματος δεν απαιτείται η υπογραφή συμπληρωματικής Σύμβασης. Η μείωση πιστοποιείται μέσω του τελικού λογαριασμού.

14.2.3 Λόγω περιστάσεων που δεν ήταν δυνατόν να προβλεφθούν

Κατά τη διάρκεια παροχής των υπηρεσιών η Εταιρεία επίσης δικαιούται να τροποποιεί τη Σύμβαση λόγω περιστάσεων που δεν ήταν δυνατόν να προβλεφθούν από έναν επιμελή συναλλασσόμενο , όπως ενδεικτικά και όχι περιοριστικά η εφαρμογή νέων κανονισμών ή κανόνων που καθιερώθηκαν ως υποχρεωτικοί μετά την ανάθεση των υπηρεσιών.
Για τις υπόψη τροποποιήσεις της σύμβασης ανεξάρτητα από το εάν συνεπάγονται μεταβολή του συνολικού αρχικού συμβατικού τιμήματος θα συνάπτεται συμπληρωματική σύμβαση.

14.2.4 Λόγω υποκατάστασης του Αντισυμβαλλόμενου σύμφωνα με τα προβλεπόμενα στο άρθρο 8 του παρόντος τεύχους.

14.3 Ο Αντισυμβαλλόμενος δεν μπορεί να προβεί σε καμία μεταβολή, συμπληρωματική υπηρεσία και εν γένει τροποποίηση, από τις αναφερόμενες στις παραπάνω παραγράφους 14.2.1, 14.2.2 και 14.2.3, χωρίς έγγραφη εντολή της Εταιρείας. Ο Αντισυμβαλλόμενος, εφόσον λάβει σχετική εντολή, υποχρεούται να προβεί στις τροποποιήσεις χωρίς καθυστέρηση και δεν έχει δικαίωμα να αρνηθεί την υποχρέωση αυτή.
Οι τροποποιήσεις που γίνονται με σχετική εντολή της Εταιρείας δεν εξασθενούν ούτε ακυρώνουν κατά οποιοδήποτε τρόπο τη Σύμβαση. Οι συνέπειες, εάν υπάρχουν, θα αντιμετωπίζονται όπως προβλέπεται κατωτέρω.

14.4 Τιμές συμπληρωματικών ή νέων υπηρεσιών

14.4.1 Όλες οι μεταβολές γίνονται με Εντολή Τροποποίησης, θα αποτιμώνται δε με βάση τις τιμές που αναφέρονται στη Σύμβαση, εφόσον οι τιμές αυτές, κατά την κρίση της Εταιρείας, είναι εφαρμόσιμες.
Εάν στη Σύμβαση δεν περιλαμβάνονται τιμές που μπορεί να χρησιμοποιηθούν, καθορίζονται νέες τιμές, με βάση τιμές της Σύμβασης για παρεμφερείς υπηρεσίες.
Για υπηρεσίες που δεν περιλαμβάνονται στις προηγούμενες περιπτώσεις οι τιμές μπορεί να καθορίζονται με βάση τα πραγματικά στοιχεία κόστους.
Για την εξακρίβωση του κόστους μπορεί να διενεργούνται δοκιμαστικές εργασίες, σύμφωνα με σχετικές οδηγίες της Εταιρείας.

14.4.2 Σε περίπτωση ασυμφωνίας των δύο μερών η Εταιρεία θα καθορίσει τις τιμές που κατά τη γνώμη της θεωρούνται κατάλληλες και εύλογες και θα εφαρμόζονται τα προβλεπόμενα στο άρθρο 25 του παρόντος τεύχους.

14.5 Τροποποίηση χρονοδιαγράμματος σύμβασης

Όταν οι σχετικές μεταβολές έχουν ως αποτέλεσμα την καθυστέρηση εκτέλεσης, ολικά ή μερικά, της Σύμβασης, τότε συμφωνείται παράταση των σχετικών προθεσμιών, σύμφωνα με τα οριζόμενα στο άρθρο 13 του παρόντος τεύχους.

14.5 Μεταβολές σύμβασης προτεινόμενες από τον Αντισυμβαλλόμενο

Η Εταιρεία δια της αρμόδιας Διεύθυνσης της ΔΕΗ έχει το δικαίωμα κατά τη διάρκεια παροχής των υπηρεσιών, να δεχθεί ή να απορρίψει προτάσεις του Αντισυμβαλλόμενου για ήσσονος σημασίας μεταβολές στη μορφή, στην ποιότητα, στο είδος και στην ποσότητα οποιουδήποτε τμήματός τους.

Άρθρο 15
Έλεγχος Υπηρεσιών

15.1 Η παροχή των υπηρεσιών από τον Αντισυμβαλλόμενο θα υπόκειται στο συνεχή γενικό έλεγχο της Εταιρείας ή άλλων προσώπων που έχουν ορισθεί από την Εταιρεία για το σκοπό αυτό.

15.2 Η Εταιρεία, αν από τον έλεγχο, που ασκεί σύμφωνα με το άρθρο αυτό, θεωρήσει αιτιολογημένα ότι η μέθοδος εργασίας ή το προσωπικό και τα μέσα που χρησιμοποιεί ο Αντισυμβαλλόμενος δεν είναι επαρκή ή κατάλληλα ή δεν εκτελούνται σύμφωνα με τα Πρότυπα, Κανονισμούς, Τεχνικές Προδιαγραφές και σχετικές οδηγίες, ώστε να εξασφαλίζονται η τέλεια, οικονομική, εμπρόθεσμη, ασφαλής και απόλυτα σύμφωνη με τους όρους της Σύμβασης παροχή υπηρεσιών, έχει το δικαίωμα να δίδει εντολές προς τον Αντισυμβαλλόμενο και ο Αντισυμβαλλόμενος υποχρεούται να συμμορφώνεται με τις εντολές αυτές, χωρίς να δικαιούται οποιαδήποτε πρόσθετη πληρωμή ή αύξηση των τιμών.

Η άσκηση του ελέγχου από την Εταιρεία με κανένα τρόπο δεν ελαττώνει την ευθύνη του Αντισυμβαλλόμενου.

Άρθρο 16
Ελαττώματα των παρεχομένων υπηρεσιών

Σε κάθε περίπτωση που, κατά τη διάρκεια παροχής των υπηρεσιών και μέχρι την παραλαβή τους, αυτές είναι κατά την κρίση της Εταιρείας τεκμηριωμένα ελαττωματικές, ατελείς ή ακατάλληλες ή δεν πληρούν τις απαιτήσεις των προδιαγραφών και γενικά δεν συμφωνούν με εκείνα που ορίζονται στη Σύμβαση, η αρμόδια Διεύθυνση της ΔΕΗ δικαιούται, με έγγραφη εντολή της, να ζητήσει από τον Αντισυμβαλλόμενο να προβεί σε οποιαδήποτε διόρθωση, ή πρόσθετη εργασία την οποία κρίνει απαραίτητη.

Άρθρο 17
Συμβατικό Τίμημα

17.1 Το Συμβατικό Τίμημα αναφέρεται στο άρθρο 3 του Συμφωνητικού, στο οποίο αναφέρεται εάν είναι σταθερό ή υπόκειται σε αναθεώρηση και σε όποια έκταση αυτού.

17.2 Η Εταιρεία θα καταβάλει και ο Αντισυμβαλλόμενος θα πληρωθεί το Συμβατικό Τίμημα, αποδεχόμενος ότι έλαβε υπόψη του όλους τους σχετικούς παράγοντες και όλες τις συνθήκες και μεταβολές, οι οποίες δύνανται κατ' οποιοδήποτε τρόπο να επηρεάσουν την εκτέλεση της Σύμβασης, την αξία των εργασιών που θα εκτελέσει και των υπηρεσιών που θα παράσχει.

17.3 Ο Αντισυμβαλλόμενος εγγυάται επίσης την ακρίβεια και την επάρκεια των τιμών του (κατά την έννοια του άρθρου 696 του Αστικού Κώδικα) και αποδέχεται ότι το παραπάνω τίμημα θα αποτελεί πλήρη αποζημίωσή του και ότι αυτό καλύπτει, όλες τις απαιτούμενες δαπάνες για την παροχή των υπηρεσιών του και στις οποίες περιλαμβάνονται χωρίς περιορισμό και όλως ενδεικτικώς, οι δαπάνες των μισθών και ημερομισθίων του προσωπικού του, οι δαπάνες για μετακινήσεις του προσωπικού του, η αξία οποιωνδήποτε εφοδίων τα οποία θα χρησιμοποιηθούν κατά την παροχή των υπόψη υπηρεσιών, οι δαπάνες ασφάλισης, τα γενικά έξοδα (συμπεριλαμβανομένων των φόρων, τελών, δασμών κ.λπ.), οι κάθε είδους επιβαρύνσεις σε σχέση με το κάθε κατηγορίας προσωπικό του στις οποίες περιλαμβάνονται ιδίως οι εισφορές του εργοδότη σε όλους τους ασφαλιστικούς οργανισμούς, το κέρδος του Αντισυμβαλλόμενου, καθώς και κάθε άλλη δαπάνη που συνεπάγεται η συμμόρφωσή του στις προβλέψεις της Σύμβασης.

Άρθρο 18
Τρόπος πληρωμής - Συμψηφισμός Απαιτήσεων - Εκκαθάριση Λογαριασμών

18.1 Οι πληρωμές προς τον Αντισυμβαλλόμενο θα γίνονται σύμφωνα με τους όρους της Σύμβασης και εντός καθοριζόμενης στους Ειδικούς Όρους Σύμβασης προθεσμίας από την ημερομηνία υποβολής στην Εταιρεία όλων των σχετικών δικαιολογητικών τα οποία θα πρέπει να είναι επακριβή και πλήρη. Μέσα στην προθεσμία αυτή θα πρέπει να έχουν ολοκληρωθεί από την Εταιρεία και οι πάσης φύσεως έλεγχοι της ακρίβειας και της πληρότητας των υποβληθέντων δικαιολογητικών. Σε περίπτωση αργίας, ως ημερομηνία εξόφλησης των τιμολογίων θα θεωρείται η αμέσως επομένη εργάσιμη ημέρα.

18.2 Για την πραγματοποίηση των πληρωμών, ο Αντισυμβαλλόμενος υποχρεούται να υποβάλει τα απαραίτητα δικαιολογητικά κατά περίπτωση, όπως αυτά καθαρίζονται στους Ειδικούς Όρους.

18.3 Εκτός αν καθορίζεται διαφορετικά στους Ειδικούς Όρους, όλες οι πληρωμές θα γίνονται από την Εταιρεία προς τον Αντισυμβαλλόμενο και ο Αντισυμβαλλόμενος θα είναι αποκλειστικά υπεύθυνος έναντι οποιωνδήποτε τρίτων για τις πληρωμές προς αυτούς.

18.4 Ο Αντισυμβαλλόμενος είναι υποχρεωμένος να συνεχίσει χωρίς διακοπή την εκτέλεση των εργασιών, ανεξάρτητα από οποιοδήποτε διακανονισμό ή/και καθυστέρηση πληρωμής των συμβατικών ποσών, σε περίπτωση καθυστερήσεως των πληρωμών από υπαιτιότητα της Εταιρείας, μετά τα χρονικά όρια που καθορίζονται στην παραπάνω παράγραφο 18.1.
Σε περίπτωση καθυστέρησης, χωρίς υπαιτιότητα του Αντισυμβαλλόμενου, πληρωμών ποσών που υπερβαίνουν ποσοστό δέκα τοις εκατό (10%) του συνολικού συμβατικού τιμήματος, για χρονικό διάστημα πέραν του διπλάσιου της προθεσμίας που προβλέπεται στην παραπάνω παράγραφο 18.1, ο Αντισυμβαλλόμενος δικαιούται να διακόπτει την παροχή των υπηρεσιών κατόπιν υποβολής προς τη ΔΕΗ Ειδικής Εγγράφου Δήλωσης και μέχρι την καταβολή προς αυτόν των ληξιπρόθεσμων οφειλομένων ποσών. Στο πιο πάνω συνολικό συμβατικό τίμημα συνυπολογίζονται τα ποσά των Συμπληρωμάτων της Σύμβασης, των αναθεωρήσεων και των τυχόν πρόσθετων εργασιών που έχουν εγκριθεί από την Εταιρεία, για τις οποίες δεν έχουν υπογραφεί σχετικά συμπληρώματα.

18.5 Οι πληρωμές προς τον Αντισυμβαλλόμενο θα γίνονται μέσω λογαριασμού μιας οποιασδήποτε Τράπεζας που θα προσδιοριστεί από τον Αντισυμβαλλόμενο έγκαιρα, στο νόμισμα που προβλέπεται στο Συμφωνητικό της Σύμβασης.

18.6 Καμιά πληρωμή δεν θα γίνεται στον Αντισυμβαλλόμενο χωρίς συμμόρφωσή του προς τους κανονισμούς των Ελληνικών Φορολογικών Αρχών, οι οποίοι ισχύουν κατά το χρόνο της πληρωμής.

18.7 Ο Αντισυμβαλλόμενος θα εκπληρώνει όλες τις υποχρεώσεις του, που απορρέουν από τη Σύμβαση, σε σχέση με πληρωμές κάθε φόρου, δασμού, κρατήσεων και λοιπών τελών που τυχόν οφείλει να καταβάλει με βάση την ισχύουσα Νομοθεσία.

18.9 Ο Αντισυμβαλλόμενος αποδέχεται ρητά ότι η Εταιρεία δύναται να παρακρατεί και να αποδίδει σύμφωνα με την κείμενη νομοθεσία, από τα προσκομιζόμενα προς πληρωμή τιμολόγια του Αντισυμβαλλόμενου, οποιαδήποτε ποσά οφείλει να πληρώσει ο Αντισυμβαλλόμενος έναντι φόρου εισοδήματος ή οποιωνδήποτε άλλων επιβαρύνσεων υπέρ της Πολιτείας ή των Ασφαλιστικών Ιδρυμάτων ή υπέρ οποιουδήποτε τρίτου.
Επίσης, ο Αντισυμβαλλόμενος εκχωρεί το δικαίωμα στη ΔΕΗ όπως, σε περίπτωση που αυτός καθυστερεί αδικαιολόγητα την καταβολή δεδουλευμένων αποδοχών στο προσωπικό που απασχολείται στο πλαίσιο της παρούσας Σύμβασης, με αποτέλεσμα να προβάλλονται τεκμηριωμένα διεκδικήσεις των υπόψη εργαζομένων από τη ΔΕΗ και δεδομένων των επιπτώσεων που έχει σε αυτή η εκκρεμότητα, να δεσμεύσει αντίστοιχο

ποσό και κατά ανώτατο μέχρι του ποσού που οφείλει η ΔΕΗ στον Αντισυμβαλλόμενο από μεταξύ τους συμβάσεις, ώστε να καλύψει τις εν λόγω απαιτήσεις.

Άρθρο 19
Φόροι, Δασμοί και λοιπές επιβαρύνσεις του Αντισυμβαλλόμενου

19.1 Τον Αντισυμβαλλόμενο βαρύνουν όλες οι δαπάνες για εκτελωνισμούς, φόρους, τέλη, δασμούς, κρατήσεις και οποιεσδήποτε άλλες νόμιμες επιβαρύνσεις, όπως ισχύουν κατά το χρόνο που δημιουργείται η υποχρέωση καταβολής τους.

19.2 Με βάση την υποχρέωσή του αυτή ο Αντισυμβαλλόμενος πρέπει να τηρεί όλες τις νόμιμες διατυπώσεις και τα φορολογικά και λοιπά στοιχεία, που απαιτούνται από την Ελληνική Νομοθεσία και να συμμορφώνεται αυστηρά προς όλες τις διαδικασίες που καθορίζονται από τις ισχύουσες διατάξεις της Ελληνικής Νομοθεσίας.
Τον Αντισυμβαλλόμενο βαρύνουν επίσης πρόσθετοι φόροι, δασμοί ή/και πρόστιμα για τη μη πιστή τήρηση των παραπάνω υποχρεώσεών του και σε περίπτωση που από τις αρμόδιες Αρχές οι επιβαρύνσεις αυτές, εκ λάθους ή παραδρομής, χρεωθούν στην Εταιρεία, θα καταβληθούν από αυτήν αλλά θα παρακρατηθούν από την πρώτη πληρωμή του Αντισυμβαλλόμενου.

19.3 Δασμοί, φόροι και άλλες σχετικές επιβαρύνσεις, που καταβλήθηκαν τυχόν από την Εταιρεία λόγω παράλειψης του Αντισυμβαλλόμενου, των Υπεργολάβων του και Υποπρομηθευτών του να συμμορφωθούν προς τις κείμενες διατάξεις της φορολογικής Νομοθεσίας θα απαιτηθούν από την Εταιρεία και θα εισπραχθούν έντοκα από τον Αντισυμβαλλόμενο οποτεδήποτε και κατά οποιονδήποτε τρόπο ακόμη και με παρακράτηση πληρωμών κ.λπ.

19.4 Ο Αντισυμβαλλόμενος, οι Υπεργολάβοι και οι Υποπρομηθευτές του, και το Προσωπικό, (Έλληνες ή ξένοι), που απασχολείται απ' αυτούς, θα πληρώσουν το φόρο εισοδήματος και τις σχετικές επιβαρύνσεις που θα επιβληθούν στην Ελλάδα, αναφορικά με την υλοποίηση της Σύμβασης και σύμφωνα με την Ελληνική Νομοθεσία και τις Διμερείς Κυβερνητικές Συμφωνίες, εάν υπάρχουν τέτοιες.
Για το σκοπό αυτό η Εταιρεία θα εφαρμόζει τις παρακρατήσεις οι οποίες προβλέπονται από τη φορολογική Νομοθεσία.

19.5 Την Εταιρεία βαρύνει και δεν περιλαμβάνεται στο Συμβατικό Τίμημα, ο Φόρος Προστιθέμενης Αξίας (ΦΠΑ) ή ισοδύναμος φόρος που επιβάλλεται ή θα επιβληθεί στην Ελλάδα επί των τιμολογίων που θα εκδώσει ο Αντισυμβαλλόμενος προς την Εταιρεία, στα πλαίσια της παρούσας Σύμβασης.

Άρθρο 20
Ασφαλίσεις

Εφόσον δεν προβλέπεται διαφορετικά στους Ειδικούς Όρους, το προσωπικό του Αντισυμβαλλόμενου θα πρέπει να είναι ασφαλισμένο σύμφωνα με τις διατάξεις της Εργατικής Νομοθεσίας.

Άρθρο 21
Ποινικές Ρήτρες

21.1 Ανεξάρτητα και πέρα από τα δικαιώματα της Εταιρείας που προκύπτουν από τους όρους του παρόντος τεύχους, ο Αντισυμβαλλόμενος υποχρεούται, χωρίς αντιρρήσεις, να καταβάλει στην Εταιρεία Ποινικές Ρήτρες είτε για υπέρβαση συμβατικής προθεσμίας λόγω υπαιτιότητάς του είτε για άλλους λόγους που τυχόν προβλέπονται στο Συμφωνητικό.

21.2 Οι Ποινικές Ρήτρες θα καταβάλλονται, λόγω αθετήσεως ή μη εκπληρώσεως από τον Αντισυμβαλλόμενο των συμβατικών του υποχρεώσεων και ανεξάρτητα αν έχει ή όχι προκληθεί απώλεια ή ζημία (θετική) στην Εταιρεία.

21.3 Η καταβολή των Ποινικών Ρητρών θα γίνεται από τον Αντισυμβαλλόμενο σωρευτικά και επιπλέον από κάθε αποζημίωση για αποκατάσταση κάθε θετικής ζημίας ή απώλειας που έχει υποστεί η Εταιρεία ως αποτέλεσμα αντισυμβατικής συμπεριφοράς του Αντισυμβαλλόμενου.

21.4 Η Εταιρεία παρακρατεί τα ποσά των Ποινικών Ρητρών, είτε από τις Εγγυήσεις Καλής Εκτέλεσης, είτε από οποιοδήποτε ποσό οφείλεται και πρέπει να καταβληθεί από την Εταιρεία στον Αντισυμβαλλόμενο για οποιαδήποτε αιτία.

21.5 Οι όροι με βάση τους οποίους θα καταβάλλονται Ποινικές Ρήτρες, το ύψος των καταβαλλομένων ποσών, όπως και οποιοιδήποτε άλλοι όροι σε σχέση προς αυτές, καθαρίζονται στους Ειδικούς όρους της Σύμβασης.

Άρθρο 22
Διαδικασίες παραλαβής των Υπηρεσιών

22.1 Μετά την περάτωση των υπηρεσιών, όπως αυτή ορίζεται στους Όρους της Σύμβασης και εφόσον δεν προβλέπεται διαφορετικά στους Ειδικούς Όρους αυτής, ο Αντισυμβαλλόμενος δικαιούται να ζητήσει την Παραλαβή των υπηρεσιών υποβάλλοντας προς τούτο έγγραφη αίτηση, η οποία καταχωρείται στο Πρωτόκολλο της αρμόδιας για την παρακολούθηση της Σύμβασης Διεύθυνσης της ΔΕΗ.
Η Εταιρεία υποχρεούται μέσα σε τριάντα (30) ημέρες από την υποβολή της αίτησης, και με την προϋπόθεση ότι ο Αντισυμβαλλόμενος έχει συμμορφωθεί με τα οριζόμενα στους Ειδικούς Όρους Σύμβασης, να κάνει αποδεκτή την αίτηση και να προχωρήσει στη διαδικασία της Παραλαβής. Στην ίδια προθεσμία θα πρέπει να γνωστοποιήσει στον Αντισυμβαλλόμενο τους λόγους της τυχόν απόρριψης της αίτησης.
Η Παραλαβή διενεργείται είτε από Επιτροπή Παραλαβής, που αποτελείται από όργανα της Εταιρείας και έχει συσταθεί αρμοδίως, είτε από την αρμόδια Διεύθυνση της ΔΕΗ.
Εάν ο Αντισυμβαλλόμενος παραλείψει να ζητήσει την Παραλαβή των υπηρεσιών, η Εταιρεία δύναται να προβεί στη σχετική διαδικασία, ειδοποιώντας εγγράφως τον Αντισυμβαλλόμενο.

22.2 Το αρμόδιο όργανο παραλαμβάνει τις Υπηρεσίες ποσοτικά και ποιοτικά, λαμβάνοντας υπόψη τα στοιχεία που περιέχονται στον φάκελο της Σύμβασης και διενεργώντας, κατά την κρίση του, σχετικούς ελέγχους. Καταγράφει τις διαπιστώσεις και παρατηρήσεις του, ιδίως για τα τυχόν ελαττώματα, καθώς και τις προτάσεις του για τη διευθέτηση όλων των εκκρεμοτήτων που προκύπτουν.

22.3 Το αρμόδιο όργανο παραλαβής μπορεί, παρά τις διαπιστώσεις και παρατηρήσεις του, να προχωρήσει στην παραλαβή των Υπηρεσιών, αλλά στην περίπτωση αυτή όλα τα δικαιώματα της Εταιρείας και οι απαιτήσεις της, σύμφωνα με τη Σύμβαση, θα διατηρηθούν έως ότου τα ελαττώματα, τα οποία εξακριβώθηκαν από το αρμόδιο όργανο, αποκατασταθούν πλήρως.
Στις περιπτώσεις που, ως αποτέλεσμα των διαπιστώσεών της, το αρμόδιο όργανο θεωρήσει απαραίτητο να αναβάλει την παραλαβή μέχρι τη διευθέτηση όλων των σχετικών εκκρεμοτήτων, θα το δηλώσει στον Αντισυμβαλλόμενο και η διαδικασία της παραλαβής θα επαναληφθεί, με φροντίδα και έξοδα του Αντισυμβαλλόμενου, μετά τη συμμόρφωση του τελευταίου στις προτάσεις και συστάσεις της Εταιρείας.

22.4 Για την παραλαβή συντάσσεται Βεβαίωση ή Πρωτόκολλο Παραλαβής μέσα σε εύλογη προθεσμία.

Σε περίπτωση σύνταξης Πρωτοκόλλου αυτό υπογράφεται από την Επιτροπή και τον επικεφαλής της αρμόδιας για την παρακολούθηση Διεύθυνσης της ΔΕΗ καθώς και από τον Αντισυμβαλλόμενο, συντάσσεται σε δύο (2) πρωτότυπα από τα οποία ο Αντισυμβαλλόμενος παίρνει το ένα.
Στην περίπτωση που ο Αντισυμβαλλόμενος αρνηθεί την υπογραφή του Πρωτοκόλλου, το Πρωτόκολλο του κοινοποιείται ή του αποστέλλεται επί αποδείξει.
Εάν ο Αντισυμβαλλόμενος υπογράψει το Πρωτόκολλο με επιφύλαξη ή το Πρωτόκολλο του γνωστοποιηθεί κατά τα ανωτέρω, δικαιούται να υποβάλει τις αντιρρήσεις του εντός ανατρεπτικής προθεσμίας τριάντα (30) ημερών, από την υπογραφή του Πρωτοκόλλου ή από την κοινοποίησή ή αποστολή του, άλλως θεωρείται ότι το αποδέχεται ανεπιφύλακτα.
Η Παραλαβή θεωρείται ότι έχει συντελεσθεί με την έκδοση της αντίστοιχης Βεβαίωσης ή την υπογραφή του σχετικού Πρωτοκόλλου από την Εταιρεία.

Άρθρο 23
Ανωτέρα Βία

23.1 Όλα τα περιστατικά τα οποία επηρεάζουν την εκτέλεση της Σύμβασης και εκφεύγουν, κατά εύλογη κρίση, από τον έλεγχο των συμβαλλομένων, και τα οποία δεν είναι δυνατόν να προβλεφθούν ή αποφευχθούν, με μέτρα επιμέλειας ενός συνετού συμβαλλομένου, θεωρούνται ως περιστατικά Ανωτέρας Βίας.
Ενδεικτικά αναφέρεται ότι οι απεργίες από αναγνωρισμένες ενώσεις εργαζομένων, ανταπεργίες (lockouts) ή μέτρα και απαγορεύσεις από μέρους των Αρχών, κωλυσιπλοΐα, επιβολή στρατιωτικού νόμου και παρόμοιας φύσης περιστατικά, θεωρούνται περιστατικά Ανωτέρας Βίας.

23.2 Εφόσον δεν ορίζεται διαφορετικά στο Συμφωνητικό ή/και στους Ειδικούς Όρους της Σύμβασης, ως περιστατικά Ανωτέρας Βίας για τον Αντισυμβαλλόμενο θεωρούνται και αυτά που τυχόν θα συμβούν σε υπεργολάβους, υποπρομηθευτές ή κατασκευαστές του προς προμήθεια βασικού εξοπλισμού που ορίζονται στη Σύμβαση.

23.3 Η μη εκπλήρωση ή η καθυστέρηση για εκπλήρωση από κάποιον Υπεργολάβο ή Υποπρομηθευτή των υποχρεώσεών του προς τον Αντισυμβαλλόμενο, καθώς επίσης και η τυχόν αποτυχία στην υλοποίηση οποιωνδήποτε τμημάτων της Σύμβασης, δεν θα θεωρείται ως περιστατικό Ανωτέρας Βίας.

23.4 Τα περιστατικά Ανωτέρας Βίας, που επηρεάζουν τη Σύμβαση, είναι αποδεκτά μόνο ως λόγος καθυστέρησης και όχι ως λόγος αποζημίωσης των συμβαλλομένων.
Οι συμβαλλόμενοι δεν ευθύνονται για μη εκπλήρωση των συμβατικών τους υποχρεώσεων, εφόσον συντρέχουν λόγοι Ανωτέρας Βίας και δεν δικαιούνται να εγείρουν απαιτήσεις που αφορούν οποιεσδήποτε τυχόν δαπάνες ή και οικονομική επιβάρυνσή τους, ως συνέπεια περιστατικού Ανωτέρας Βίας.
Εάν τμήμα μόνο των υποχρεώσεων επηρεάζεται από τους λόγους Ανωτέρας Βίας, ο συμβαλλόμενος που τους επικαλείται παραμένει υπόχρεος για το τμήμα των υποχρεώσεών του, που δεν θίγεται από αυτούς.
Εάν λόγοι παρατεταμένης Ανωτέρας Βίας εμποδίζουν προδήλως την έγκαιρη εκτέλεση της Σύμβασης ο επικαλούμενος αυτούς συμβαλλόμενος δύναται να αιτηθεί τη λύση της Σύμβασης σύμφωνα με την παράγραφο 26.3 του παρόντος τεύχους.

23.5 Σε περίπτωση που ένας εκ των συμβαλλομένων θεωρήσει ότι συνέβη περιστατικό Ανωτέρας Βίας, λόγω του οποίου δεν μπόρεσε να εκπληρώσει, ολικά ή μερικά, τις υποχρεώσεις του που απορρέουν από τη Σύμβαση, θα πρέπει να γνωστοποιήσει το γεγονός αυτό εγγράφως στον έτερο συμβαλλόμενο, παρέχοντας όσο το δυνατόν περισσότερες πληροφορίες.
Η εν λόγω γνωστοποίηση πρέπει να γίνει το αργότερο μέσα σε ανατρεπτική προθεσμία δέκα πέντε (15) ημερών από την επέλευση του περιστατικού αυτού, εκτός από την

περίπτωση κατά την οποία απαιτείται, λόγω της φύσης του περιστατικού, να ειδοποιηθεί αμέσως ο έτερος συμβαλλόμενος.

23.6 Για να θεωρηθεί και αναγνωρισθεί ένα γεγονός Ανωτέρας Βίας, ο επικαλούμενος αυτό θα πρέπει να αποδείξει, υποβάλλοντας όλα τα απαιτούμενα έγγραφα και λοιπά αποδεικτικά στοιχεία, το περιστατικό καθώς επίσης ότι το γεγονός έχει κατευθείαν σχέση με την καθυστέρηση στην εκτέλεση της Σύμβασης και ότι η καθυστέρηση στην επίτευξη των καθοριζομένων από τη Σύμβαση προθεσμιών οφείλεται αποκλειστικά στο γεγονός αυτό.

23.7 Οι συνέπειες που είχε το γεγονός γνωστοποιούνται από τον επικαλούμενο αυτό με την υποβολή στον έτερο συμβαλλόμενο όλων των σχετικών στοιχείων και πληροφοριών εντός τριάντα (30) ημερών από το πέρας του περιστατικού αυτού.
Κάθε συμβαλλόμενος υποχρεούται να γνωστοποιήσει στον έτερο, εάν αποδέχεται ότι το επικαλούμενο από αυτόν περιστατικό εμπίπτει στις διατάξεις του παρόντος άρθρου, μέσα σε τριάντα (30) ημέρες από την υποβολή των σχετικών στοιχείων.

23.8 Η μη συμμόρφωση κάθε συμβαλλόμενου, για οποιονδήποτε λόγο ή αιτία, προς τον προαναφερθέντα όρο περί γνωστοποιήσεως και υποβολής στοιχείων κ.λπ., εντός των πιο πάνω καθοριζομένων ανατρεπτικών προθεσμιών, καθιστά απαράδεκτη οποιαδήποτε αίτησή του για παράταση προθεσμίας.

23.9 Ο χρόνος κατά τον οποίο μπορούν να παραταθούν οι συμβατικές προθεσμίες θα καθορισθεί, με βάση τον πραγματικά απολεσθέντα χρόνο.

23.10 Για όσο χρόνο συνεχίζεται το περιστατικό Ανωτέρας Βίας, ο επικαλούμενος αυτό αντισυμβαλλόμενος υποχρεούται να λάβει κάθε ενδεδειγμένο μέτρο προς περιορισμό των εκ του περιστατικού αυτού απορρεουσών ζημιών. Επίσης πρέπει να καταβάλει αποδεδειγμένα κάθε δυνατή προσπάθεια για εξουδετέρωση, χωρίς χρονοτριβή, των συνεπειών οποιουδήποτε γεγονότος Ανωτέρας Βίας, (π.χ. ζημιές στον Εξοπλισμό, τυχόν καθυστερήσεις κ.λπ.).

Άρθρο 24
Απαιτήσεις - Διαφωνίες

24.1 Απαιτήσεις

24.1.1 Σε κάθε περίπτωση που ο Αντισυμβαλλόμενος θεωρεί ότι δικαιούται να προβάλει απαίτηση σε σχέση με οποιοδήποτε θέμα που αφορά στη Σύμβαση, υποχρεούται να το γνωστοποιεί στην αρμόδια Διεύθυνση της ΔΕΗ μέσα σε μια ανατρεπτική προθεσμία τριάντα (30) ημερών από την ημερομηνία που εμφανίστηκε το γεγονός για το οποίο προτίθεται να υποβάλει την απαίτηση.
Με την εμφάνιση του γεγονότος, ο Αντισυμβαλλόμενος υποχρεούται να τηρεί όλα τα απαραίτητα στοιχεία κατά τρόπο που κρίνεται αναγκαίος για την υποστήριξη του αιτήματος που προτίθεται να θέσει.

24.1.2 Η αρμόδια Διεύθυνση της ΔΕΗ, αμέσως με τη λήψη της παραπάνω γνωστοποίησης και χωρίς αυτό να συνεπάγεται οποιαδήποτε παραδοχή της ευθύνης της Εταιρείας, δικαιούται να επιθεωρεί τα τηρούμενα στοιχεία και να δίδει οδηγίες στον Αντισυμβαλλόμενο να τηρεί και περαιτέρω κατάλληλα στοιχεία που θεωρεί απαραίτητα και ο Αντισυμβαλλόμενος υποχρεούται να τα τηρεί και να παρέχει στην αρμόδια Διεύθυνση αντίγραφα όλων των στοιχείων, μόλις του ζητηθούν.

24.1.3 Μέσα σε ενενήντα (90) ημέρες από την αποστολή της παραπάνω γνωστοποίησης, ο Αντισυμβαλλόμενος υποχρεούται να παραδίδει στην

αρμόδια Διεύθυνση της ΔΕΗ οικονομική ανάλυση της απαίτησής του, που θα συνοδεύεται με λεπτομερή αιτιολόγησή της.
Στην περίπτωση κατά την οποία το γεγονός για το οποίο έχει τεθεί η απαίτηση συνεχίζεται, η οικονομική ανάλυση θα θεωρείται προσωρινή και ο Αντισυμβαλλόμενος, κατά εύλογα διαστήματα ή όταν το ζητά η αρμόδια Διεύθυνση, θα δίδει νεότερα συγκεντρωτικά στοιχεία. Σε τέτοια περίπτωση ο Αντισυμβαλλόμενος υποχρεούται να δώσει την τελική οικονομική ανάλυση μέσα σε προθεσμία τριάντα (30) ημερών από τη λήξη του γεγονότος.

24.1.4 Εάν ο Αντισυμβαλλόμενος δε συμμορφώνεται με τις διατάξεις του παρόντος άρθρου, το δικαίωμα του για πληρωμή, εφόσον το αίτημα του γίνει δεκτό από την Εταιρεία, περιορίζεται μέχρι του σημείου που η Εταιρεία θεωρεί ότι μπορεί να επαληθευτεί από τα τηρηθέντα στοιχεία.

24.2 Διαφωνίες

24.2.1 Κάθε διαφωνία, συμπεριλαμβανομένης και αυτής που σχετίζεται με μη ικανοποιητική για τον Αντισυμβαλλόμενο ρύθμιση απαίτησής του σύμφωνα με τα παραπάνω, ή οποιουδήποτε είδους διένεξη, που αναφύεται οποτεδήποτε κατά τη διάρκεια ισχύος της Σύμβασης, θα γνωστοποιείται γραπτώς στην αρμόδια Διεύθυνση, από τον Αντισυμβαλλόμενο με «Αίτηση Επίλυσης Διαφωνίας» όπου θα υπάρχει ρητή υπενθύμιση ότι η διαφωνία αυτή γίνεται με βάση το παρόν άρθρο.

24.2.2 Στην «Αίτηση Επίλυσης Διαφωνίας», ο Αντισυμβαλλόμενος θα εκθέτει σαφώς το θέμα που αφορά στη διαφωνία. Ειδικότερα στην Αίτηση θα περιλαμβάνονται τα ακόλουθα:

α. σαφής περιγραφή της υπό κρίση διαφωνίας.
β. έκθεση των πραγματικών περιστατικών στα οποία βασίζεται η διαφωνία.
γ. η αιτουμένη αποκατάσταση ή και το τυχόν σε σχέση προς αυτή χρηματικό ποσό.
δ. όλα τα αποδεικτικά στοιχεία που αφορούν στη διαφωνία, όπως επίσης και κάθε στοιχείο που θεωρείται απαραίτητο.

24.2.3 Η αρμόδια Διεύθυνση υποχρεούται, το αργότερο σε ενενήντα (90) ημέρες από την ημέρα κατά την οποία έλαβε την αίτηση αυτή, να γνωστοποιήσει στον Αντισυμβαλλόμενο την απόφαση της Εταιρείας.

24.2.4 Σε περίπτωση που ο Αντισυμβαλλόμενος δεν ικανοποιείται με την απόφαση αυτή της Εταιρείας ή στην περίπτωση κατά την οποία δε λάβει απάντηση μέσα στην παραπάνω προθεσμία, μπορεί να προσφύγει στα αναφερόμενα όργανα στο άρθρο 28 του παρόντος τεύχους.
Πριν από την άσκηση της πιο πάνω προσφυγής, ο Αντισυμβαλλόμενος μπορεί να ζητήσει την επίλυση της διαφωνίας του με φιλικές διαπραγματεύσεις. Στην περίπτωση αυτή και εφόσον τούτο γίνει αποδεκτό από την Εταιρεία, συγκροτείται, από το αρμόδιο όργανο της Εταιρείας, Επιτροπή Φιλικού Διακανονισμού η οποία διαπραγματεύεται με τον Αντισυμβαλλόμενο την επίλυση της διαφωνίας.

24.2.5 Η ύπαρξη διαφωνίας μεταξύ των συμβαλλομένων δεν αναστέλλει την εκτέλεση της Σύμβασης, ούτε αίρει την υποχρέωση του Αντισυμβαλλόμενου να ακολουθεί τις εντολές της Εταιρείας σχετικά με την έγκαιρη και την άρτια εκτέλεση αυτής.

24.2.6 Για κάθε διαφωνία ή οποιουδήποτε είδους διένεξη της Εταιρείας με τον Αντισυμβαλλόμενο, που αναφύεται οποτεδήποτε κατά τη διάρκεια ισχύος της Σύμβασης και σχετίζεται με μη ικανοποιητική εκτέλεση απαίτησής της από αυτόν, η ΔΕΗ μπορεί, πριν από την άσκηση προσφυγής στα αναφερόμενα στο

άρθρο 28 του παρόντος τεύχους όργανα, να ζητήσει την επίλυση της διαφωνίας της με φιλικές διαπραγματεύσεις εφαρμόζοντας αναλογικά τα παραπάνω.

Άρθρο 25
Καταγγελία της Σύμβασης

25.1 Καταγγελία της Σύμβασης με υπαιτιότητα του Αντισυμβαλλόμενου

Με την επιφύλαξη όλων των δικαιωμάτων της Εταιρείας που προκύπτουν από τις υπόλοιπες διατάξεις της Σύμβασης, αν ο Αντισυμβαλλόμενος:

- καθυστερήσει χωρίς εύλογη δικαιολογία την έναρξη των υπηρεσιών ή εάν παρά τις προηγούμενες έγγραφες επισημάνσεις δεν υποβάλει το χρονοδιάγραμμα της Σύμβασης, εφόσον προβλέπεται από τα τεύχη τη Σύμβασης, ή εάν δεν συμμορφώνεται προς τις διατάξεις της Σύμβασης και καθυστερεί την πρόοδο των υπηρεσιών, ώστε να είναι προφανώς αδύνατη η εμπρόθεσμη υλοποίησή της
- παρέχει συστηματικά κακότεχνες υπηρεσίες
- χρησιμοποιεί, εφόσον προβλέπονται, υλικά που δεν ανταποκρίνονται στις προδιαγραφές
- παραβαίνει ή δεν εφαρμόζει επιμόνως και εξακολουθητικά εγκεκριμένα σχέδια και δεν συμμορφώνεται με τις οδηγίες, τις κατευθύνσεις και εντολές της Εταιρείας
- παραλείπει συστηματικά την τήρηση του περιβαλλοντικού, του κοινωνικού και του εργατικού δικαίου και των κανόνων ασφαλείας των εργαζομένων,

η Εταιρεία δικαιούται, για οποιαδήποτε από τα παραπάνω, να απευθύνει «Ειδική Πρόσκληση» προς τον Αντισυμβαλλόμενο, μεριμνώντας για την επιβεβαίωση της παραλαβής της, στην οποία απαραίτητα μνημονεύονται οι διατάξεις του παρόντος άρθρου και στην οποία περιλαμβάνεται συγκεκριμένη περιγραφή ενεργειών ή εργασιών που πρέπει να εκτελεσθούν από τον Αντισυμβαλλόμενο, μέσα σε προθεσμία που τάσσεται από την «Ειδική Πρόσκληση».
Η προθεσμία στην περίπτωση αυτή καθορίζεται με βάση το συντομότερο δυνατό από τεχνικής απόψεως χρόνο για την εκπλήρωση της αντίστοιχης υποχρέωσης, και σε καμιά περίπτωση δεν μπορεί να είναι μικρότερη από δεκαπέντε (15) ημέρες.
Εάν ο Αντισυμβαλλόμενος δεν συμμορφωθεί με την παραπάνω έγγραφη «Ειδική Πρόσκληση» μέσα στην προθεσμία που έχει καθοριστεί, η Εταιρεία δικαιούται με εξώδικη δήλωση προς τον Αντισυμβαλλόμενο, η οποία κοινοποιείται με Δικαστικό Επιμελητή, να προβεί στην καταγγελία της Σύμβασης μερικά ή ολικά.

25.2 Οριστικοποίηση Καταγγελίας

25.2.1 Η καταγγελία οριστικοποιείται, αν δεν υποβληθούν μέσα σε προθεσμία δεκαπέντε (15) ημερών αντιρρήσεις του Αντισυμβαλλόμενου ή αν απορριφθούν οι αντιρρήσεις. Οι αντιρρήσεις που ασκούνται εμπρόθεσμα αναστέλλει την καταγγελία μέχρι να εκδοθεί η απόφαση επί των αντιρρήσεων.
Για τις αντιρρήσεις αποφασίζει η Εταιρεία μέσα σε ανατρεπτική προθεσμία δύο (2) μηνών από την κατάθεσή της.

25.2.2 Με την οριστικοποίηση της καταγγελίας της Σύμβασης, σύμφωνα με τα παραπάνω, ο Αντισυμβαλλόμενος παύει την παροχή των σχετικών υπηρεσιών, αποχωρεί από τις εγκαταστάσεις της Εταιρείας και γίνεται εκκαθάριση της Σύμβασης το συντομότερο δυνατό.

25.2.3 Η Εταιρεία δικαιούται είτε να συνεχίσει η ίδια την εκτέλεση της Σύμβασης, είτε να την αναθέσει σε άλλον Αντισυμβαλλόμενο.

25.2.4 Κατά του Αντισυμβαλλόμενου του οποίου η σύμβαση καταγγέλθηκε οριστικά, με την επιφύλαξη όλων των δικαιωμάτων της Εταιρείας για αποζημίωση, επέρχονται αθροιστικά οι εξής συνέπειες:

α. γίνεται άμεσα απαιτητό το αναπόσβεστο μέρος της τυχόν χορηγηθείσας προκαταβολής
β. καταπίπτουν υπέρ της Εταιρείας οι Εγγυήσεις Καλής Εκτέλεσης της Σύμβασης
γ. γίνονται άμεσα απαιτητές οποιεσδήποτε οφειλόμενες Ποινικές Ρήτρες μέχρι την ημερομηνία της καταγγελίας.

25.2.5 Για την εκκαθάριση της Σύμβασης η Εταιρεία, το συντομότερο δυνατό, θα καθορίσει:

- το οφειλόμενο στον Αντισυμβαλλόμενο συνολικό ποσό (εάν υπάρχει) για υπηρεσίες που έχουν παρασχεθεί σύμφωνα με τη Σύμβαση,
- τα τυχόν αχρεωστήτως καταβληθέντα σε αυτόν ποσά.
  Διευκρινίζεται ότι ως αχρεωστήτως καταβληθέντα ποσά λογίζονται και εκείνα που αφορούν σε παρασχεθείσες υπηρεσίες οι οποίες όμως προδήλως είναι ατελείς ή μη εφαρμόσιμες και ως εκ τούτου μη δυνάμενες να αξιοποιηθούν για τη χρήση που προορίζονται.
- διεκδικούμενα από την Εταιρεία ποσά από άλλες απαιτήσεις της

Το ανωτέρω αποτέλεσμα της εκκαθάρισης θα γνωστοποιηθεί στον Αντισυμβαλλόμενο.

Άρθρο 26
Λύση της Σύμβασης

26.1 Λύση Σύμβασης λόγω πτώχευσης ή αναγκαστικής διαχείρισης ή υποκατάστασης Αντισυμβαλλόμενου

26.1.1 Η Σύμβαση λύεται υποχρεωτικώς, κατόπιν μονομερούς δηλώσεως της ΔΕΗ, όταν ο Αντισυμβαλλόμενος πτωχεύσει ή σε περίπτωση σύμπραξης/ένωσης όταν πτωχεύσουν όλα τα συμπράττοντα μέρη.

26.1.2 Η Σύμβαση λύεται, κατά την κρίση της Εταιρείας, όταν ο Αντισυμβαλλόμενος τεθεί σε αναγκαστική διαχείριση ή σε περίπτωση σύμπραξης/ένωσης όταν τεθούν σε αναγκαστική διαχείριση όλα τα συμπράττοντα μέρη, όπως επίσης στην περίπτωση που κατά παράβαση των διατάξεων του άρθρου 8 του παρόντος τεύχους ο Αντισυμβαλλόμενος υποκατέστησε τον εαυτό του ολικά ή μερικά κατά την εκτέλεση της Σύμβασης με οποιοδήποτε τρίτο.

26.1.3 Σε όλες τις περιπτώσεις λύσης της Σύμβασης των δύο προηγούμενων παραγράφων εφαρμόζονται τα αναφερόμενα στην παράγραφο 25.2 του παρόντος τεύχους.

26.2 Λύση Σύμβασης κατ' επιλογή της Εταιρείας

26.2.1 Η Εταιρεία, κατά την κρίση της, δικαιούται σε οποιοδήποτε χρόνο κατά τη διάρκεια ισχύος της Σύμβασης, να αιτηθεί τη λύση αυτής ολικά ή μερικά, με την προϋπόθεση ότι θα ειδοποιήσει τον Αντισυμβαλλόμενο, τουλάχιστον ένα (1) μήνα πριν από την ημερομηνία που καθορίζεται στην ειδοποίηση, ως ημερομηνία λύσης της.
Στην περίπτωση αυτή, η Εταιρεία θα καταβάλει στον Αντισυμβαλλόμενο τις δαπάνες στις οποίες ο τελευταίος υποβλήθηκε πράγματι κατά τη διάρκεια της εκτέλεσης της Σύμβασης και μέχρι της ημερομηνίας της λύσης, μετά από αφαίρεση του τιμήματος του αντικειμένου της Σύμβασης που ήδη παρέλαβε και πλήρωσε η Εταιρεία.

26.2.2 Εφόσον η Σύμβαση κατά την ημερομηνία της λύσης έχει υλοποιηθεί σε ποσοστό μικρότερο από το εβδομήντα τοις εκατό (70%) του συμβατικού τιμήματος, η

Εταιρεία, πέραν των προβλεπομένων στην προηγούμενη παράγραφο, καταβάλει στον Αντισυμβαλλόμενο επιπλέον αποζημίωση για τεκμαιρόμενο όφελος, που δεν μπορεί να είναι μεγαλύτερο του πέντε τοις εκατό (5%) του ποσού που απομένει μέχρι τη συμπλήρωση του εβδομήντα τοις εκατό (70%) του συμβατικού τιμήματος. Τα προαναφερόμενα εξαντλούν τις υποχρεώσεις της Εταιρείας που απορρέουν από τη λύση της Σύμβασης.
Η ΔΕΗ διατηρεί το δικαίωμα να μην καταβάλει στον Αντισυμβαλλόμενο την παραπάνω αποζημίωση σε περίπτωση συνδρομής περιστατικών που, αν και εντάσσονται στο πλαίσιο δραστηριοτήτων της, δεν θα μπορούσαν ευλόγως να είχαν προβλεφθεί από αυτήν.

26.2.3 Στην περίπτωση της λύσης της Σύμβασης κατά τα ως άνω, η Εταιρεία υποχρεούται να επιστρέψει το εναπομένον υπόλοιπο των Εγγυήσεων Καλής Εκτέλεσης, ο δε Αντισυμβαλλόμενος θα επιστρέψει στην Εταιρεία την τυχόν προκαταβολή που του δόθηκε, μετά από αφαίρεση του μέρους της που αντιστοιχεί στο συμβατικό τίμημα του αντικειμένου που υλοποιήθηκε πριν από τη λύση της Σύμβασης.

26.3 Λύση κοινή συναινέσει

Η Σύμβαση μπορεί να λυθεί αιτιολογημένα αζημίως και για τα δύο μέρη, κατόπιν έγγραφης συμφωνίας τους. Στην περίπτωση αυτή εφαρμόζονται τα προβλεπόμενα στην πιο πάνω παράγραφο 26.2.1.

Άρθρο 27
Αποκλεισμός Αντισυμβαλλόμενου από διαδικασίες επιλογής

27.1 Η ΔΕΗ διατηρεί το δικαίωμα, να αποκλείει τον Αντισυμβαλλόμενο, με απόφαση των αρμοδίων οργάνων της, προσωρινά ή οριστικά από τις διαδικασίες επιλογής Αντισυμβαλλόμενου, εφόσον έχει καταγγελθεί προηγούμενη Σύμβαση ή έχει περιέλθει σε γνώση της Εταιρείας ότι ο Ενδιαφερόμενος έχει καταδικαστεί οριστικά για παραβίαση του περιβαλλοντικού, κοινωνικού ή εργατικού δικαίου ή εφόσον δεν έχει την απαιτούμενη αξιοπιστία ή δεν έχει επιδείξει ενδεδειγμένη συναλλακτική συμπεριφορά έναντι της Εταιρείας.

27.2 Ο πιο πάνω αποκλεισμός γνωστοποιείται εγγράφως με εξώδικη δήλωση στον Αντισυμβαλλόμενο από την αρμόδια Διεύθυνση της ΔΕΗ. Ο Αντισυμβαλλόμενος έχει το δικαίωμα να υποβάλει σχετική διαμαρτυρία, η εκδίκαση της οποίας γίνεται από αρμόδιο όργανο της Εταιρείας.

Άρθρο 28
Δωσιδικία - Δίκαιο της Σύμβασης

Κάθε διαφορά μεταξύ των συμβαλλομένων μερών, η οποία προκύπτει κατά την υλοποίηση της Σύμβασης και δεν καθίσταται δυνατόν να επιλυθεί με τις προβλεπόμενες σε αυτή διαδικασίες, επιλύεται από τα αρμόδια Ελληνικά Δικαστήρια και σύμφωνα με το Ελληνικό Δίκαιο.

Αριθμός Πρόσκλησης : **ΔΠΛΠ 1668**

Αντικείμενο «Μηχανουργική υποστήριξη συντήρησης συγκροτημάτων μέσης ισχύος μονάδας V ΑΗΣ Κερατέας-Λαυρίου»

ΑΣΦΑΛΙΣΕΙΣ ΠΑΡΟΧΗΣ ΥΠΗΡΕΣΙΩΝ

ΑΣΦΑΛΙΣΕΙΣ ΠΑΡΟΧΗΣ ΥΠΗΡΕΣΙΩΝ

1. Γενικοί Όροι Ασφάλισης

Τα Ασφαλιστήρια Συμβόλαια συνάπτονται στην ελληνική γλώσσα, με δυνατότητα αποδοχής επίσημης μετάφρασης δεόντως επικυρωμένης.
Πρωτότυπα αυτών νόμιμα υπογεγραμμένα από τον Αντισυμβαλλόμενο και την ασφαλιστική εταιρία ή δεόντως επικυρωμένα αντίγραφά τους κατατίθενται προς έλεγχο και φύλαξη στην αρμόδια Υπηρεσία της ΔΕΗ, εντός της προθεσμίας που προβλέπεται στους παρακάτω ειδικούς όρους καθενός εξ αυτών.
Τα Ασφαλιστήρια θα ελέγχονται και θα επιβεβαιώνονται ως προς το ύψος των ασφαλισθέντων ποσών για όλη τη διάρκεια της σύμβασης καθώς επίσης ως προς τα ανώτατα ασφαλιζόμενα όρια.
Για τη σύναψη των Ασφαλιστηρίων Συμβολαίων πρέπει να τηρούνται οι ακόλουθοι γενικοί όροι:

1.1 Ο Αντισυμβαλλόμενος πρέπει να συμμορφώνεται και να λαμβάνει υπόψη τις διατάξεις των Νόμων, Νομοθετικών Διαταγμάτων, Κανονισμών κ.λπ. που ισχύουν εκάστοτε και έχουν εφαρμογή στην Ελλάδα.

1.2 Ο Αντισυμβαλλόμενος πρέπει να συμμορφώνεται με τους όρους των Ασφαλιστηρίων. Η σύναψη των σχετικών Ασφαλιστηρίων με τις εκάστοτε Ασφαλιστικές εταιρείες και οι παρεχόμενες ασφαλιστικές καλύψεις, οι οικονομικοί και ασφαλιστικοί όροι, εξαιρέσεις, απαλλαγές κ.λπ. υπόκεινται σε κάθε περίπτωση στην τελική έγκριση της ΔΕΗ.

1.3 Οι ασφαλίσεις δεν απαλλάσσουν ούτε περιορίζουν κατά κανένα τρόπο τις υποχρεώσεις και ευθύνες του Αντισυμβαλλόμενου που απορρέουν από τη Σύμβαση, ιδιαίτερα σε ό,τι αφορά στις προβλεπόμενες, από τα σχετικά Ασφαλιστήρια Συμβόλαια, εξαιρέσεις, εκπτώσεις, προνόμια, περιορισμούς κ.λπ. Ο Αντισυμβαλλόμενος παραμένει αποκλειστικά υπεύθυνος για την αποκατάσταση ζημιών σε πρόσωπα ή/και πράγματα, πέραν από τα ποσά κάλυψης των Ασφαλιστηρίων.

1.4 Σε περίπτωση που ο Αντισυμβαλλόμενος παραλείψει ή αμελήσει να συμμορφωθεί με τις ασφαλιστικές υποχρεώσεις του μέσα στα χρονικά περιθώρια που ορίζονται στους όρους των ασφαλιστηρίων ή οι ασφαλίσεις που θα συνομολογήσει κριθούν ως μη ικανοποιητικές από τη ΔΕΗ, ή παραλείψει να αναπροσαρμόσει την αξία των ασφαλιστηρίων σε περίπτωση συμπληρωμάτων ή αναπροσαρμογών του συμβατικού τιμήματος, η ΔΕΗ δικαιούται να συνάψει, στο όνομα και με δαπάνες του Αντισυμβαλλόμενου, τα απαιτούμενα Ασφαλιστήρια και να παρακρατήσει (εντόκως, με το νόμιμο επιτόκιο υπερημερίας) το ποσό των ασφαλίστρων, είτε από τις οφειλόμενες σε αυτόν πληρωμές, είτε με κατάπτωση ανάλογου ποσού από την Εγγυητική Επιστολή Καλής Εκτέλεσης του Αντισυμβαλλόμενου.
Επίσης, σε περίπτωση που ο Αντισυμβαλλόμενος αμελεί ή δυστροπεί να καταβάλει στους ασφαλιστές το οφειλόμενο ποσό των ασφαλίστρων, η ΔΕΗ, για να αποφύγει ενδεχόμενη ακύρωσή τους, δικαιούται να καταβάλει τα ασφάλιστρα στους ασφαλιστές για λογαριασμό του Αντισυμβαλλόμενου και να παρακρατήσει τα αντίστοιχα ποσά ως ανωτέρω.
Η ΔΕΗ επίσης επιφυλάσσεται του δικαιώματος της να παρακρατεί από οφειλόμενες πληρωμές του Αντισυμβαλλόμενου κάθε ποσό που δεν είναι δυνατό να εισπραχθεί από τους ασφαλιστές λόγω εξαιρέσεων, απαλλαγών κ.λπ. που τυχόν υπάρχουν στους όρους των εν λόγω Ασφαλιστηρίων.

1.5 Σε περίπτωση που η Ασφαλιστική Εταιρία, με την οποία ο Αντισυμβαλλόμενος συνομολόγησε τα σχετικά Ασφαλιστήρια Συμβόλαια, παραλείψει ή αρνηθεί (μερικά

ή ολικά) να καταβάλει αποζημίωση για οποιαδήποτε ζημιά κ.λπ., για οποιοδήποτε λόγο ή αιτία, ο Αντισυμβαλλόμενος έχει την αποκλειστική ευθύνη για την αποκατάσταση της μη εξοφλημένης ζημιάς ή βλάβης κ.λπ., σύμφωνα με τους όρους της Σύμβασης και η ΔΕΗ δικαιούται να παρακρατήσει από οποιοδήποτε λογαριασμό του ή εγγύησή του τα ποσά οποιασδήποτε φύσης που, κατά την κρίση της, απαιτούνται για την αποκατάσταση της εν λόγω ζημίας ή βλάβης.

2. Γενικοί Όροι Ασφαλιστηρίων Συμβολαίων

Στα Ασφαλιστήρια Συμβόλαια θα περιλαμβάνονται οπωσδήποτε οι ακόλουθοι γενικοί όροι:

2.1 Πρέπει να αναφέρεται ρητά ότι στην έννοια της λέξης "Αντισυμβαλλόμενος" περιλαμβάνεται και το πάσης φύσεως προσωπικό που απασχολείται με οποιαδήποτε σχέση εργασίας από τον Αντισυμβαλλόμενο για την υπόψη Σύμβαση, καθώς επίσης και οι τυχόν Υπεργολάβοι και Υποπρομηθευτές του Αντισυμβαλλόμενου.

2.2 Η ΔΕΗ θα είναι συνασφαλιζόμενη.

2.3 Τα εν λόγω Ασφαλιστήρια δεν δύνανται να ακυρωθούν, τροποποιηθούν ή λήξουν χωρίς αποδεδειγμένη σχετική ειδοποίηση από την Ασφαλιστική Εταιρεία, τόσο προς τον Αντισυμβαλλόμενο όσο και προς την αρμόδια Υπηρεσία της ΔΕΗ, τουλάχιστον τριάντα (30) ημέρες νωρίτερα.

2.4 Ο Αντισυμβαλλόμενος, προκειμένου να εξασφαλιστεί η ΔΕΗ για τις απαιτήσεις της από αυτόν σε σχέση με τα ποσά που του έχει καταβάλει (με εξαίρεση τις προκαταβολές έναντι ισόποσων εγγυητικών επιστολών ή άλλων εγγυήσεων που αποδέχτηκε η ΔΕΗ), υποχρεώνεται να ζητήσει από τους ασφαλιστές του να συμπεριλάβουν τόσο στο Κατά Παντός Κινδύνου όσο και στα άλλου τύπου Ασφαλιστήρια, που καλύπτουν την ίδια Σύμβαση, τον εξής Ειδικό Όρο:

"Σε περίπτωση μερικής ή ολικής καταστροφής ή βλάβης του αντικειμένου της Σύμβασης ή οποιασδήποτε άλλης ζημιάς:

α. Προκειμένου η Ασφαλιστική Εταιρεία να καταβάλει στον Αντισυμβαλλόμενο τη σχετική με τη ζημιά κ.λπ. αποζημίωση πρέπει να έχει λάβει προηγουμένως την έγγραφη για το σκοπό αυτό συγκατάθεση της ΔΕΗ. Αφού δε καταβάλει στον Αντισυμβαλλόμενο τη σχετική με τη ζημιά κ.λπ. αποζημίωση πρέπει να γνωστοποιήσει όλα τα σχετικά με την καταβολή στοιχεία στη ΔΕΗ.

β. Εφόσον η ΔΕΗ δεν παρέχει στην Ασφαλιστική Εταιρεία την εν λόγω συγκατάθεση, η απαίτηση του Αντισυμβαλλόμενου κατά της Ασφαλιστικής Εταιρείας για την καταβολή της αποζημίωσης εκχωρείται στη ΔΕΗ, αυτόματα και χωρίς άλλες διατυπώσεις, (ειδική ή άλλου είδους εντολή ή εξουσιοδότηση από τον Αντισυμβαλλόμενο) και η Ασφαλιστική Εταιρεία αποδέχεται από τούδε και υποχρεώνεται να καταβάλει τη σχετική αποζημίωση στη ΔΕΗ, μετά από αίτησή της.
Η εκχώρηση της απαίτησης αυτής του Αντισυμβαλλόμενου στη ΔΕΗ κατ' ουδένα τρόπο τον απαλλάσσει από τις ευθύνες και υποχρεώσεις του που απορρέουν από τη Σύμβαση που έχει συνάψει με τη ΔΕΗ.

3. Ειδικότερο Περιεχόμενο Ασφαλιστηρίων Συμβολαίων

Στα Ασφαλιστήρια Συμβόλαια, που υποχρεούται να συνάψει ο Αντισυμβαλλόμενος, θα πρέπει να περιλαμβάνονται, κατά περίπτωση, οι ακόλουθοι όροι και προϋποθέσεις:

3.1 Ασφάλιση Γενικής Αστικής Ευθύνης του Αντισυμβαλλόμενου Έναντι Τρίτων και Εργοδοτικής Ευθύνης του Αντισυμβαλλόμενου

3.1.1 Ειδικοί Όροι

α. Το Ασφαλιστήριο Γενικής Αστικής Ευθύνης έναντι τρίτων και Εργοδοτικής Ευθύνης του Αντισυμβαλλόμενου, υποβάλλονται από τον Αντισυμβαλλόμενο δεκαπέντε (15) ημέρες πριν την έναρξη των εργασιών ή την εγκατάσταση του Αντισυμβαλλόμενου στον τόπο παροχής υπηρεσιών, οποιοδήποτε από τα δύο συμβεί πρώτο.

γ. Το ασφαλιστήριο Γενικής Αστικής Ευθύνης ενεργοποιείται στη βάση loss occurrence, δηλαδή να καλύπτονται απαιτήσεις Τρίτων, συνεπεία ζημιών ή σωματικών βλαβών που επέλθουν κατά τη διάρκεια της ασφάλισης.

δ. Στην ασφάλιση της Εργοδοτικής Ευθύνης του Αντισυμβαλλόμενου, δεν θα έχουν ισχύ οι όροι της προηγούμενης παραγράφου γ. και της παραγράφου 2.1.

3.1.2 Αντικείμενο ασφάλισης

Με την ασφάλιση αυτή θα καλύπτεται η Γενική Αστική Ευθύνη του Αντισυμβαλλόμενου Έναντι Τρίτων και η Εργοδοτική Ευθύνη του. Οι Ασφαλιστές υποχρεώνονται να καταβάλουν αποζημιώσεις σε τρίτους για σωματικές βλάβες, θάνατο, ψυχική οδύνη ή ηθική βλάβη και υλικές ζημιές που προξένησε ο Αντισυμβαλλόμενος, καθ' όλη τη διάρκεια των εργασιών παροχής υπηρεσιών που του έχουν ανατεθεί οποτεδήποτε προξενήθηκαν και εφόσον έγιναν στο πλαίσιο των συμβατικών υποχρεώσεων του Αντισυμβαλλόμενου.

[1] Ειδικότερα στα Ασφαλιστήρια αυτά πρέπει να περιλαμβάνονται τα εξής:

α. Η ΔΕΗ, το εν γένει προσωπικό της και οι συνεργάτες της με το προσωπικό τους, θεωρούνται ΤΡΙΤΑ ΠΡΟΣΩΠΑ σύμφωνα με τους όρους και τις εξαιρέσεις της διασταυρούμενης ευθύνης έναντι αλλήλων (CROSS LIABILITY).

β. Η Ασφαλιστική Εταιρεία υποχρεώνεται να αποκρούει οποιαδήποτε αγωγή εγείρεται κατά του Αντισυμβαλλόμενου ή της ΔΕΗ και του προσωπικού τους, στην περίπτωση που η βλάβη και η ζημιά οφείλεται σε πράξη ή παράλειψή τους, για βλάβη ή ζημιά που καλύπτεται από το Ασφαλιστήριο Αστικής Ευθύνης έναντι Τρίτων και θα καταβάλει κάθε ποσό που θα απαιτηθεί για έξοδα έκδοσης της εγγυοδοσίας, για άρση τυχόν κατασχέσεων κ.λπ. σχετιζομένων με την αστική ευθύνη, μέσα στα όρια των ποσών που αναφέρονται εκάστοτε ως ανώτατα όρια ευθύνης των ασφαλιστών.

γ. Η Ασφαλιστική Εταιρεία παραιτείται κάθε δικαιώματος αναγωγής κατά της ΔΕΗ, των συμβούλων, των συνεργατών της και των υπαλλήλων τους, στην περίπτωση που η βλάβη ή η ζημιά οφείλεται σε πράξη ή παράλειψη των προσώπων αυτών.

δ. Καλύπτεται η εκ του άρθρου 922 Αστικού Κώδικα απορρέουσα ευθύνη της ΔΕΗ, (ευθύνη προστήσαντος).

3.1.3 Όρια αποζημίωσης Γενικής Αστικής Ευθύνης έναντι τρίτων

Το όριο αποζημίωσης για το οποίο θα πραγματοποιείται η ασφάλιση σε ένα αυτοτελές ασφαλιστήριο συμβόλαιο Γενικής Αστικής Ευθύνης έναντι τρίτων, πρέπει να είναι **κατά περιστατικό** το ακόλουθο:

Κάλυψη σωματικών βλαβών ή/και θανάτου (συμπεριλαμβανομένων αξιώσεων για ηθική βλάβη ή/και ψυχική οδύνη), υλικών ζημιών Τρίτων ως το ποσό των **500.000 ΕΥΡΩ** κατ' άτομο και ατύχημα και για ομαδικό ατύχημα.

3.1.4 Όριο αποζημίωσης Εργοδοτικής Ευθύνης (Επέκταση της Γενικής Αστικής Ευθύνης ή χωριστό αυτοτελές ασφαλιστήριο)

Το όριο αποζημίωσης για το οποίο θα πραγματοποιείται η ασφάλιση (επέκταση της Γενικής Αστικής Ευθύνης ή αυτοτελές ασφαλιστήριο Εργοδοτικής Ευθύνης), πρέπει να είναι **κατά περιστατικό** το ακόλουθο:

Κάλυψη σωματικών βλαβών ή/και θανάτου (συμπεριλαμβανομένων αξιώσεων για ηθική βλάβη ή/και ψυχική οδύνη), ως το ποσό των **500.000 ΕΥΡΩ** κατ' άτομο και ατύχημα και για ομαδικό ατύχημα.

3.1.5 Ανώτατο όριο κάλυψης– Απαλλαγές

α. Το Ανώτατο όριο ευθύνης των ασφαλιστών για την κάλυψη Γενικής Αστικής Ευθύνης υπέρ Τρίτων και της Εργοδοτικής Ευθύνης (σε ενιαίο ασφαλιστήριο συνδυαστικά) καθ' όλη τη διάρκεια της ασφάλισης θα ανέρχεται σε **1.000.000 ΕΥΡΩ.**
Σε περίπτωση που η κάλυψη Γενικής Αστικής Ευθύνης και η κάλυψη Εργοδοτικής Ευθύνης, δίδεται από χωριστά ασφαλιστήρια, το ανώτατο όριο ευθύνης των ασφαλιστών καθ' όλη τη διάρκεια της ασφάλισης θα ανέρχεται σε **1.000.000 ΕΥΡΩ** για κάθε ένα ασφαλιστήριο.

β. Σε περίπτωση που τα παραπάνω ανώτατα όρια ευθύνης των ασφαλιστών μειωθούν κάτω του ποσού των 1.000.000 ΕΥΡΩ (λόγω επέλευσης ζημιογόνων γεγονότων και καταβολής από τους ασφαλιστές των αντίστοιχων αποζημιώσεων), ενώ η Σύμβαση ΔΕΗ – Αντισυμβαλλόμενου βρίσκεται σε ισχύ, ο Αντισυμβαλλόμενος για να μη μένει υπασφαλισμένος οφείλει να φροντίζει για την άμεση συμπλήρωση του ανωτάτου ορίου ευθύνης, ώστε αυτό να είναι συνεχώς **1.000.000 ΕΥΡΩ** καθ' όλη τη διάρκεια ισχύος του Ασφαλιστηρίου. Σχετικός όρος για πρόσθετη κάλυψη και συμπλήρωση του ανώτατου ορίου ευθύνης θα συμπεριλαμβάνεται στο Ασφαλιστήριο.

3.1.6 Απαλλαγές

Το Ανώτατο όριο απαλλαγής ανά ζημιά και περιστατικό θα ανέρχεται σε **3.000** ΕΥΡΩ.

3.1.7 Διάρκεια ασφάλισης

Η ευθύνη των ασφαλιστών θα αρχίζει με την έναρξη, με οποιοδήποτε τρόπο, των εργασιών ή με την εγκατάσταση του Αντισυμβαλλόμενου στον τόπο παροχής των υπηρεσιών και θα λήγει την ημερομηνία της ολοκλήρωσης των παρεχόμενων υπηρεσιών στο πλαίσιο της Σύμβασης.

Μετά την αποπεράτωση των εργασιών, εάν προκύψει θέμα άλλης ρύθμισης σχετικής με τις παρεχόμενες υπηρεσίες η οποία εμπίπτει στο

πλαίσιο των συμβατικών υποχρεώσεων του Αντισυμβαλλόμενου και απαιτεί την εκτέλεση εργασιών από τον ίδιο, τότε πρέπει να φροντίσει για την εκ νέου ασφαλιστική κάλυψη της Αστικής Ευθύνης του έναντι Τρίτων και της Εργοδοτικής Ευθύνης του με τους ίδιους όρους κ.λπ., όπως και στην αρχική του ασφάλιση και με διάρκεια τόση, όση χρειάζεται για την άρτια ολοκλήρωση των παρεχόμενων υπηρεσιών κ.λπ.

3.2 Ασφάλιση Επαγγελματικής Ευθύνης

3.2.1 Ειδικοί Όροι

Το ασφαλιστήριο θα υποβάλλεται δεκαπέντε (15) ημέρες πριν από την έναρξη των εργασιών στην αρμόδια Υπηρεσία της ΔΕΗ.

3.2.2 Αντικείμενο ασφάλισης

Με την ασφάλιση αυτή θα καλύπτεται η Ευθύνη ταυ Αντισυμβαλλόμενου για οικονομικές κυρίως ζημιές της ΔΕΗ και Τρίτων, συμπεριλαμβανομένων χρηματικών αποζημιώσεων για σωματικές βλάβες ή και θάνατο, συνεπεία πλημμελούς εκτέλεσης των εργασιών που ανέλαβε ο Αντισυμβαλλόμενος, στο πλαίσιο των συμβατικών του υποχρεώσεων.

[2] Ειδικότερα στα Ασφαλιστήρια αυτά πρέπει να περιλαμβάνονται τα εξής:

α. Η ΔΕΗ, το εν γένει προσωπικό της και οι συνεργάτες της με το προσωπικό τους, θεωρούνται ΤΡΙΤΑ ΠΡΟΣΩΠΑ.

β. Η Ασφαλιστική Εταιρεία υποχρεώνεται να αποκρούει οποιαδήποτε αγωγή εγείρεται κατά του Αντισυμβαλλόμενου ή της ΔΕΗ και του προσωπικού τους, στην περίπτωση που η βλάβη και η ζημιά οφείλεται σε πράξη ή παράλειψή τους, για βλάβη ή ζημιά που καλύπτεται από το Ασφαλιστήριο Επαγγελματικής Ευθύνης έναντι Τρίτων και θα καταβάλει κάθε ποσό που θα απαιτηθεί για έξοδα έκδοσης της εγγυοδοσίας, για άρση τυχόν κατασχέσεων κ.λπ. σχετιζομένων με την αστική ευθύνη, μέσα στα όρια των ποσών που αναφέρονται εκάστοτε ως ανώτατα όρια ευθύνης των ασφαλιστών.

γ. Η Ασφαλιστική Εταιρεία παραιτείται κάθε δικαιώματος αναγωγής κατά της ΔΕΗ, των συμβούλων, των συνεργατών της και των υπαλλήλων τους, στην περίπτωση που η βλάβη ή η ζημιά οφείλεται σε πράξη ή παράλειψη των προσώπων αυτών.

3.2.3 Ασφαλιζόμενα Όρια

Ανώτατο όριο ευθύνης των ασφαλιστών κατά περιστατικό και σωρευτικά για όλη τη διάρκεια της ασφάλισης **1.000.000 ΕΥΡΩ** [3].

3.2.4 Διάρκεια ασφάλισης

Η ευθύνη των ασφαλιστών θα αρχίζει με την έναρξη, με οποιοδήποτε τρόπο, των εργασιών ή την εγκατάσταση του Αντισυμβαλλόμενου στον τόπο παροχής των υπηρεσιών και θα λήγει με την ημερομηνία λήξης της Σύμβασης μεταξύ ΔΕΗ και Αντισυμβαλλόμενου, με διετή τουλάχιστον εκτεταμένη περίοδο ανακοίνωσης απαιτήσεων για ζημιές που οφείλονται

σε περιστατικά που συνέβησαν ως την ημερομηνία ολοκλήρωσης των συμβατικών υποχρεώσεων του Αντισυμβαλλόμενου.

3.3 Ασφάλιση Μεταφοράς

3.3.1 Ειδικοί Όροι

Το ασφαλιστήριο θα υποβάλλεται δεκαπέντε (15) ημέρες πριν από την έναρξη μεταφορών στην αρμόδια Υπηρεσία της ΔΕΗ.

3.3.2 Αντικείμενο ασφάλισης

Με την ασφάλιση αυτή θα καλύπτεται η συνολική αξία των μεταφερομένων υλικών (εξοπλισμός, μηχανήματα κ.λπ.) για όλη τη διάρκεια της σύμβασης προέλευσης εξωτερικού ή/και εσωτερικού, καθώς και των υλικών ιδιοκτησίας ΔΕΗ που θα μεταφέρονται με ευθύνη του Αντισυμβαλλόμενου για τους μεταφορικούς κινδύνους, συμπεριλαμβανομένων και των κινδύνων φορτοεκφόρτωσης. Τα υλικά αυτά θα ασφαλίζονται Κατά Παντός Κινδύνου.

3.3.3 Διάρκεια ασφάλισης

Τα μεταφερόμενα υλικά θα ασφαλίζονται για όλη τη διάρκεια της μεταφοράς τους από την έναρξη των εργασιών της φόρτωσής τους στην αποθήκη του αποστολέα και από οποιοδήποτε σημείο της Ελλάδας ή/και του εξωτερικού μέχρι την εκφόρτωσή τους στον τόπο παροχής των υπηρεσιών.

3.4 Ασφάλιση οχημάτων, Μηχανημάτων κ.λπ.

3.4.1 Ασφάλιση των Οχημάτων, Μηχανημάτων κ.λπ. από τη χρήση τους σαν αυτοκινούμενα οχήματα (ν. 489/76)

Με την ασφάλιση αυτή θα καλύπτεται η Αστική Ευθύνη του Αντισυμβαλλόμενου για ζημιές κ.λπ. που θα προκληθούν σε τρίτους από τα οχήματα, μηχανήματα κ.λπ. που θα χρησιμοποιηθούν από αυτόν για τις ανάγκες της Σύμβασης, είτε ανήκουν σε αυτόν, είτε σε τρίτους, είτε στο προσωπικό του, σύμφωνα με τις σχετικές διατάξεις της Ελληνικής Νομοθεσίας (ν. 489/76) και για ποσά κάλυψης αυτά που προβλέπονται εκάστοτε από την ισχύουσα Νομοθεσία.

Στα σχετικά Ασφαλιστήρια πρέπει να περιλαμβάνονται και τα εξής:

Υπεύθυνος για τη φύλαξη και παρακολούθηση των εν λόγω Ασφαλιστηρίων είναι ο Αντισυμβαλλόμενος, ο οποίος υποχρεούται να τα επιδεικνύει στην αρμόδια Υπηρεσία για έλεγχο, όποτε του ζητηθούν.
Η αρμόδια Υπηρεσία σε περίπτωση άρνησης του Αντισυμβαλλόμενου να επιδείξει τα εν λόγω Ασφαλιστήρια ή σε περίπτωση που τα Ασφαλιστήρια είναι ελλιπή ή παρέχουν ανεπαρκή κατά το Νόμο κάλυψη, δικαιούται να απαγορεύει την είσοδο, έξοδο και οποιαδήποτε μετακίνηση του αντίστοιχου οχήματος στην περιοχή της παρεχόμενης υπηρεσίας.

3.4.2 Ασφάλιση των Οχημάτων, Μηχανημάτων κ.λπ. από τη χρήση τους σαν Εργαλεία

Το Ασφαλιστήριο θα υποβάλλεται από τον Αντισυμβαλλόμενο δεκαπέντε (15) ημέρες πριν από την έναρξη των εργασιών ή την εγκατάσταση του

Αντισυμβαλλόμενου στον τόπο εκτέλεσης της Σύμβασης, οποιοδήποτε από τα δύο συμβεί πρώτο, στην αρμόδια Υπηρεσία της ΔΕΗ.

Με την ασφάλιση αυτή θα καλύπτεται η Αστική Ευθύνη του Αντισυμβαλλόμενου για ζημιές, ατυχήματα κ.λπ. που θα προκληθούν σε τρίτους από τα οχήματα, μηχανήματα κ.λπ. που θα χρησιμοποιηθούν από αυτόν σαν εργαλεία για την εκτέλεση της Σύμβασης.

Στην παρούσα ασφάλιση τα ποσά αποζημίωσης, οι όροι και προϋποθέσεις, οι απαλλαγές κ.λπ. ταυτίζονται με τα ισχύοντα στην ασφάλιση Γενικής Αστικής Ευθύνης έναντι τρίτων και Εργοδοτικής Ευθύνης (παράγραφος 3.1 του παρόντος).

Εξαιρείται ο όρος: «Η ΔΕΗ είναι συνασφαλισμένη».

3.5 Ασφάλιση Προσωπικού

Η ασφάλιση του Προσωπικού περιλαμβάνει δύο (2) περιπτώσεις:

3.5.1 Ασφάλιση Προσωπικού του Αντισυμβαλλόμενου

Ο Αντισυμβαλλόμενος υποχρεούται να ασφαλίσει το εν γένει εργατοτεχνικό και υπαλληλικό προσωπικό, σύμφωνα με τις διατάξεις της Ελληνικής Εργατικής Νομοθεσίας. Ειδικότερα για το ημεδαπό προσωπικό απαιτείται σύμφωνα με την Εργατική Νομοθεσία ασφάλιση στον ΕΦΚΑ ή/και σε άλλο Οργανισμό Κυρίας ή Επικουρικής ασφάλισης, ανάλογα με την ειδικότητα.
Για το αλλοδαπό προσωπικό απαιτείται αντίστοιχη ασφάλιση, που να προβλέπεται δηλαδή από την Εργατική Νομοθεσία της Χώρας προέλευσης του προσωπικού και να μην αντιβαίνει στις διατάξεις της Ελληνικής Εργατικής Νομοθεσίας.

3.5.2 Ασφάλιση συμβούλων ή συνεργατών του Αντισυμβαλλόμενου

Ο Αντισυμβαλλόμενος υποχρεούται να ασφαλίσει τους πάσης φύσεως συμβούλους ή συνεργάτες του που θα ασχοληθούν για τις ανάγκες της Σύμβασης. Στην περίπτωση αυτή ο Αντισυμβαλλόμενος πρέπει να μεριμνήσει για την ασφάλιση των συμβούλων ή συνεργατών του, ημεδαπών ή/και αλλοδαπών, έναντι κινδύνων προσωπικών ατυχημάτων σε Ασφαλιστικό Φορέα της επιλογής του.

Από την περίπτωση αυτή εξαιρούνται οι αλλοδαποί συνεργάτες και σύμβουλοι του Αντισυμβαλλόμενου για τους οποίους έχουν γίνει ήδη ανάλογες ασφαλίσεις στη χώρα τους, οι οποίες ισχύουν για την εδώ παραμονή τους και δεν αντιβαίνουν στην Ελληνική Νομοθεσία.

Ο Αντισυμβαλλόμενος έχει την ευθύνη της φύλαξης και παρακολούθησης των αντίστοιχων Ασφαλιστηρίων. Για την πιστοποίηση των ασφαλίσεων αυτών ο Αντισυμβαλλόμενος υποχρεούται να υποβάλει στην αρμόδια Υπηρεσία της ΔΕΗ Υπεύθυνη Δήλωση ότι πράγματι οι σύμβουλοι, συνεργάτες του κ.λπ. είναι ασφαλισμένοι έναντι κινδύνων προσωπικών ατυχημάτων.

3.6 Ασφάλιση Κατά Παντός Κινδύνου Υλικών της ΔΕΗ που χορηγούνται στον Αντισυμβαλλόμενο

Το ασφαλιστήριο Κατά Παντός Κινδύνου Υλικών, υπογεγραμμένο από τον Αντισυμβαλλόμενο και την Ασφαλιστική Εταιρεία, θα υποβάλλεται από τον Αντισυμβαλλόμενο δεκαπέντε (15) ημέρες πριν από την έναρξη των εργασιών ή την εγκατάσταση του Αντισυμβαλλόμενου στον τόπο παροχής των υπηρεσιών, οποιοδήποτε από τα δύο συμβεί πρώτο.

3.6.1 Αντικείμενο Ασφάλισης

Η Ασφαλιστική Εταιρεία ασφαλίζει σε ανοικτή βάση και Κατά Παντός Κινδύνου τα υλικά, εργαλεία, μηχανήματα, εφόδια, κ.λπ. που χορηγεί η ΔΕΗ στον Αντισυμβαλλόμενο για την εκτέλεση των εργασιών της Σύμβασης.

Η ασφάλιση καλύπτει επίσης και τα υλικά, μηχανήματα κ.λπ., που τυχόν αποξηλώνονται από τις υπάρχουσες εγκαταστάσεις της ΔΕΗ, από τον Αντισυμβαλλόμενο, κατά την εκτέλεση των ανωτέρω εργασιών και προορίζονται για επανατοποθέτησή τους σε άλλο σημείο των εγκαταστάσεων ή για επιστροφή τους στις Αποθήκες της ΔΕΗ.

3.6.2 Έκταση Κάλυψης

α. Η ευθύνη των ασφαλιστών αρχίζει από τη στιγμή που τα υλικά αυτά παραδίδονται από τη ΔΕΗ στον Αντισυμβαλλόμενο για την ενσωμάτωσή τους στη Σύμβαση. Η ασφάλιση θα συνεχίζεται χωρίς διακοπή καθ' όλη τη διάρκεια της παραμονής τους στους εν γένει αποθηκευτικούς χώρους του Αντισυμβαλλόμενου, είτε πρόκειται για ανοικτούς ή κλειστούς χώρους αποθήκευσης ή ακόμη απερίφρακτους χώρους που όμως επιτηρούνται από ειδικά εντεταλμένο όργανο από το προσωπικό του Αντισυμβαλλόμενου και μέχρι την ενσωμάτωσή τους στις εγκαταστάσεις της ΔΕΗ ή την για οποιοδήποτε λόγο επιστροφή τους στις Αποθήκες της ΔΕΗ.

β. Η ευθύνη των ασφαλιστών για τα αποξηλωμένα υλικά αρχίζει από τη στιγμή που τα υλικά αυτά αποξηλώνονται, από τον Αντισυμβαλλόμενο, από τις εγκαταστάσεις της ΔΕΗ και θα συνεχίζεται χωρίς διακοπή καθ' όλη τη διάρκεια της παραμονής τους στους εν γένει αποθηκευτικούς χώρους του Αντισυμβαλλόμενου, όπως αυτοί περιγράφονται ανωτέρω και μέχρι την επανατοποθέτηση των υλικών αυτών σε άλλο σημείο των εγκαταστάσεων της ΔΕΗ, ή την για οποιοδήποτε λόγο επιστροφή τους στις Αποθήκες της ΔΕΗ.

γ. Η ασφάλιση επεκτείνεται έτσι, ώστε τα χορηγούμενα υλικά στον Αντισυμβαλλόμενο να καλύπτονται και κατά τη διάρκεια των μεταφορών τους (χερσαίες και θαλάσσιες), εντός του Ελλαδικού χώρου από τόπο σε τόπο. Επίσης επεκτείνεται ώστε να καλύπτεται η απώλεια ή καταστροφή υλικών σε απερίφρακτους χώρους, λόγω ανωτέρας βίας (φωτιά ή πλημμύρα).

δ. Η ευθύνη των ασφαλιστών λήγει με την υποβολή της Δήλωσης του Αντισυμβαλλόμενου που προβλέπεται στην παράγραφο 3.6.5.

3.6.3 Όριο Ασφαλιζόμενης Αξίας Υλικών

Με την ασφάλιση καλύπτεται η αξία των υλικών, εργαλείων κ.λπ. ιδιοκτησίας ΔΕΗ που, σύμφωνα με τη Σύμβαση, προβλέπεται να έχει στα χέρια του ο Αντισυμβαλλόμενος για κάθε χρονική στιγμή, προσαυξημένη κατά είκοσι τοις εκατό (20%) και στρογγυλευμένη στην πλησιέστερη

χιλιάδα ΕΥΡΩ, έτσι ώστε να καλύπτονται τυχόν έξοδα διαχείρισης με τα οποία επιβαρύνονται οι κοστολογήσεις των ζημιωθέντων υλικών. Στις περιπτώσεις που η ΔΕΗ διαπιστώνει, από τα υπάρχοντα στα χέρια της στοιχεία, ότι η αξία των υλικών, εργαλείων κ.λπ. ιδιοκτησίας ΔΕΗ που έχει στα χέρια του ο Αντισυμβαλλόμενος, είναι μεγαλύτερη της προαναφερόμενης ασφαλιζόμενης αξίας, παρέχεται η δυνατότητα παρέμβασης της ΔΕΗ ώστε με πρόσθετη πράξη να καλυφθεί η υφιστάμενη διαφορά.

Το ανώτατο όριο ευθύνης των ασφαλιστών κατά κίνδυνο και περιστατικό οποιασδήποτε απώλειας, καταστροφής, ζημιάς, βλάβης, κλοπής, πυρκαγιάς κ.λπ., μερικής ή ολικής, είναι ίσο με το σαράντα τοις εκατό (40%) της αξίας του χρεωστικού υπολοίπου του Αντισυμβαλλόμενου που αφορά τα υλικά, εργαλεία κ.λπ. ιδιοκτησίας ΔΕΗ που έχει στα χέρια του, όπως αναγράφεται στη Σύμβαση. Το ως άνω προκύπτον ανώτατο όριο στρογγυλεύεται στη πλησιέστερη χιλιάδα ΕΥΡΩ και δεν μπορεί να είναι μικρότερο των τριάντα χιλιάδων (30.000) ευρώ.

3.6.4 Απαλλαγές

Απαλλάσσεται της ασφαλιστικής κάλυψης, κατ' ανώτατο ανά ζημιογόνο γεγονός, ποσό ύψους χιλίων (1.000) ευρώ.

3.6.5 Διάρκεια Ασφάλισης

Η παρούσα σε ανοικτή βάση ασφάλιση του Αντισυμβαλλόμενου με τη ΔΕΗ λήγει μετά την επιστροφή από τον Αντισυμβαλλόμενο και του τελευταίου υλικού στις αποθήκες της ΔΕΗ και την υποβολή γραπτής Δήλωσης του Αντισυμβαλλόμενου προς τον ασφαλιστή για το σκοπό αυτό, δεόντως θεωρημένη από την αρμόδια Υπηρεσία της ΔΕΗ.

3.6.6 Ζημιές - Αποζημιώσεις

Σε περίπτωση ζημίας ή απώλειας υλικού ο Αντισυμβαλλόμενος υποχρεούται εντός δέκα (10) ημερών να την αναγγείλει στην Ασφαλιστική Εταιρεία και στην αρμόδια Υπηρεσία της ΔΕΗ.
Σε περίπτωση ζημίας ή απώλειας, ρητά συμφωνείται ότι η αποζημίωση θα καταβάλλεται από την ασφαλιστική εταιρία απ' ευθείας στη ΔΕΗ, καθαρή και απαλλαγμένη από πάσης φύσεως επιβαρύνσεις.

ΟΔΗΓΙΕΣ

[1] Τα πιο κάτω αναφερόμενα στοιχεία (α – ε) διαμορφώνονται ή εμπλουτίζονται κατάλληλα από την Διεύθυνση της Εταιρείας, σε συνεργασία με τη ΔΝΥ, και ανάλογα με τη φύση και τις ανάγκες κάθε Σύμβασης

[2] Τα πιο κάτω αναφερόμενα στοιχεία (α – γ) διαμορφώνονται ή εμπλουτίζονται κατάλληλα από την Διεύθυνση της Εταιρείας, σε συνεργασία με τη ΔΝΥ, και ανάλογα με τη φύση και τις ανάγκες κάθε Σύμβασης

[3] Το παραπάνω όριο αποζημίωσης μπορεί, κατά την κρίση της αρμόδιας Διεύθυνσης της Εταιρείας και κατά περίπτωση, να περιορίζεται στο μισό, όπως θα προβλέπεται στη Σύμβαση

Αριθμός Πρόσκλησης : **ΔΠΛΠ 1668**

Αντικείμενο: «Μηχανουργική υποστήριξη συντήρησης συγκροτημάτων μέσης ισχύος μονάδας V ΑΗΣ Κερατέας-Λαυρίου»

ΥΠΟΔΕΙΓΜΑΤΑ ΗΛΕΚΤΡΟΝΙΚΗΣ ΔΙΑΔΙΚΑΣΙΑΣ

Περιεχόμενα

Υ Π Ο Δ Ε Ι Γ Μ Α

ΔΗΛΩΣΗ ΝΟΜΙΜΟΠΟΙΗΣΗΣ ΠΡΟΣΦΕΡΟΝΤΟΣ [1]
(Καλύπτει την παράγραφο 13.2.2 του τεύχους 1 της Πρόσκλησης)

Ο υπογράφων ως εκπρόσωπος του προσφέροντος ……[2]…… δηλώνω ότι:

1. - (Για Έλληνες προσφέροντες)

Ο προσφέρων είναι εγγεγραμμένος στο Γενικό Εμπορικό Μητρώο (Γ.Ε.ΜΗ.) με αριθ. μερίδας …… και τηρεί όλες τις υποχρεώσεις δημοσιότητας σύμφωνα με την κείμενη νομοθεσία και ειδικότερα το ν. 3419/2005

- (Για αλλοδαπούς προσφέροντες)

Ο προσφέρων είναι εγγεγραμμένος στο Μητρώο ……

(αναγράφεται το αντίστοιχο μητρώο, η σχετική νομοθεσία της χώρας εγκατάστασής τους και τα αναγκαία στοιχεία για την πρόσβασή τους –διαδικτυακή διεύθυνση κ.λπ. - από την υπηρεσία που διενεργεί τη Διαδικασία Επιλογής)

2. ……[3]…… του προσφέροντος νομικού προσώπου είναι:
   ……
   ……
   ……

3. Νόμιμος εκπρόσωπος του προσφέροντος νομικού προσώπου είναι ……

4. Το προσφέρον νομικό πρόσωπο νομίμως:

   4.1 αποφάσισε να συμμετάσχει στη Διαδικασία ……,

   4.2 όρισε τον/τους …… να υπογράψουν την προσφορά

5. Σε περίπτωση οψιγενούς μεταβολής οποιουδήποτε στοιχείου της προσφοράς μας, αναφορικά με τις προϋποθέσεις για τη μη συνδρομή λόγων αποκλεισμού, κατά τη διάρκεια ισχύος αυτής ή/και της τυχόν σύμβασης που θα συναφθεί, δεσμευόμαστε να γνωστοποιήσουμε στη ΔΕΗ αμελλητί την υπόψη μεταβολή, άλλως η ΔΕΗ θα δύναται:
   - να απορρίψει την προσφορά μας και να καταπέσει την Εγγυητική Επιστολή Συμμετοχής στη Διαδικασία Επιλογής.
   - αν έχει ήδη συναφθεί η σχετική σύμβαση, να την καταγγείλει και να καταπέσει την Εγγυητική Επιστολή Καλής Εκτέλεσης.

Ημερομηνία: …….

Ο Δηλών

(Ονοματεπώνυμο – ιδιότητα- υπογραφή)

ΟΔΗΓΙΕΣ

[1] Όταν ο προσφέρων είναι φυσικό πρόσωπο η παρούσα Υπεύθυνη Δήλωση θα πρέπει, με κατάλληλη διαμόρφωση, να καλύπτει τις παρακάτω παραγράφους 1, και 5

[2] Αναγράφεται από το συμμετέχοντα η επωνυμία του προσφέροντος αντισυμβαλλόμενου

[3] Αναγράφεται κατά περίπτωση νομικής μορφής του προσφέροντος «μέλη του Διοικητικού Συμβουλίου …..» ή «διαχειριστές ….»

Υ Π Ο Δ Ε Ι Γ Μ Α

ΔΗΛΩΣΗ ΝΟΜΙΜΟΠΟΙΗΣΗΣ ΠΑΡΕΧΟΝΤΟΣ ΣΤΗΡΙΞΗ [1]
(Καλύπτει την παράγραφο 13.2.6.α του τεύχους 1 της Πρόσκλησης)

Ο υπογράφων ως εκπρόσωπος του παρέχοντος στήριξη .....[2]..... δηλώνω ότι:

1. Ο παρέχων στήριξη είναι εγγεγραμμένος .....[3].....

2. .....[4]..... του παρέχοντος στήριξη νομικού προσώπου είναι:
   .....
   .....
   .....

3. Νόμιμος εκπρόσωπος του παρέχοντος στήριξη νομικού προσώπου είναι .....

4. Το παρέχον στήριξη νομικό πρόσωπο νομίμως:

   4.1 αποφάσισε να παράσχει στήριξη στον προσφέροντα ..... για τη Διαδικασία .....,

   4.2 όρισε τον/τους ..... να υπογράψουν τα έγγραφα συνεργασίας και την παρούσα δήλωση

5. Σε περίπτωση οψιγενούς μεταβολής οποιουδήποτε στοιχείου, αναφορικά με τις προϋποθέσεις για τη μη συνδρομή λόγων αποκλεισμού, κατά τη διάρκεια ισχύος της συνεργασίας με τον προσφέροντα, δεσμευόμαστε να γνωστοποιήσουμε στη ΔΕΗ αμελλητί την υπόψη μεταβολή, άλλως η ΔΕΗ θα δύναται:
   - να απορρίψει την προσφορά του αποδεχόμενου τη στήριξή μας και να καταπέσει την Εγγυητική Επιστολή Συμμετοχής του στη Διαδικασία Επιλογής.
   - αν έχει ήδη συναφθεί η σχετική σύμβαση, να την καταγγείλει και να καταπέσει την Εγγυητική Επιστολή Καλής Εκτέλεσης.

Ημερομηνία: .....

Ο Δηλών

(Ονοματεπώνυμο – ιδιότητα- υπογραφή)

ΟΔΗΓΙΕΣ

[1] Όταν ο παρέχων στήριξη είναι φυσικό πρόσωπο η παρούσα Υπεύθυνη Δήλωση θα πρέπει, με κατάλληλη διαμόρφωση, να καλύπτει τις παραγράφους 1 και 5.

[2] Αναγράφεται η επωνυμία του παρέχοντος στήριξη συμμετέχοντα

[3] Συμπληρώνονται στοιχεία από τα οποία να προκύπτει η σύννομη άσκηση στη χώρα εγκατάστασης δραστηριότητας συναφούς με την στήριξη που θα παρασχεθεί (π.χ. εγγραφή σε επαγγελματικό μητρώο κλπ)

[4] Αναγράφεται κατά περίπτωση νομικής μορφής του παρέχοντος στήριξη «μέλη του Διοικητικού Συμβουλίου .....» ή «διαχειριστές ....»

Υ Π Ο Δ Ε Ι Γ Μ Α

ΔΗΛΩΣΗ ΑΠΟΔΟΧΗΣ ΟΡΩΝ ΔΙΑΓΩΝΙΣΜΟΥ ΚΑΙ ΙΣΧΥΟΣ ΠΡΟΣΦΟΡΑΣ
(Καλύπτει την παράγραφο 13.2.3 του τεύχους 1 της Πρόσκλησης)

Ο υπογράφων ως εκπρόσωπος του προσφέροντος .....[1]..... δηλώνω ότι ο προσφέρων:

1. Έλαβε πλήρη γνώση της Πρόσκλησης με στοιχεία ..... και ειδικά όλα τα τεύχη και έγγραφα που αναφέρονται στο άρθρο 8 του τεύχους 1 αυτής.
   Η διαμόρφωση των τιμών της Προσφοράς του έγινε μετά από εξέταση που πραγματοποίησε στον τόπο εκτέλεσης της σύμβασης, όπου έλαβε πλήρη γνώση των συνθηκών και κινδύνων που υπάρχουν ή μπορούν να εμφανισθούν και που είναι δυνατόν να επηρεάσουν με οποιοδήποτε τρόπο το κόστος ή το χρόνο εκτέλεσης της.

2. Αποδέχεται ρητά και ανεπιφύλακτα όλους τους όρους της Διαδικασίας, ...[2]..... καθώς και του συνημμένου στην Πρόσκληση σχεδίου σύμβασης.

3. Η προσφορά του θα παραμείνει σε ισχύ σύμφωνα με τα προβλεπόμενα στο άρθρο 10 του τεύχους 1 της Πρόσκλησης και ότι δεν δικαιούται, υπό οποιεσδήποτε συνθήκες, μετά την αποσφράγισή της και καθ' όλη τη διάρκεια ισχύος της να την ανακαλέσει ή να ζητήσει την τροποποίηση ή συμπλήρωση της με οποιοδήποτε τρόπο ή μορφή.

4. Η προσφορά του:
   - δεν έχει Αποκλίσεις από τους Εμπορικούς και Οικονομικούς Όρους της Πρόσκλησης

Ημερομηνία: .....

Ο Δηλών

(Ονοματεπώνυμο – ιδιότητα- υπογραφή)

ΟΔΗΓΙΕΣ

[1] Αναγράφεται η επωνυμία του προσφέροντος

[2] Σε περίπτωση που έχουν εκδοθεί Συμπληρώματα της Πρόσκλησης ο δηλών πρέπει να αναγράψει «και του/των Συμπληρώματος/των αυτής Νο ... έως και Νο ...»

Υ Π Ο Δ Ε Ι Γ Μ Α

ΔΗΛΩΣΗ ΠΕΡΙ ΜΗ ΣΥΝΔΡΟΜΗΣ ΛΟΓΩΝ ΑΠΟΚΛΕΙΣΜΟΥ ΠΡΟΣΦΕΡΟΝΤΟΣ
(Καλύπτει την παράγραφο 13.2.4 του τεύχους 1 της Πρόσκλησης)

Ο υπογράφων ως εκπρόσωπος του προσφέροντος .....[1]..... στη Διαδικασία **ΔΠΛΠ 1668** δηλώνω, επί ποινή απόρριψης της προσφοράς του, ότι:

1. Ο Προσφέρων μέχρι την ημέρα υποβολής της προσφοράς του δεν εμπίπτει σε κανέναν από τους λόγους αποκλεισμού συμμετοχής του στην παρούσα διαδικασία, που αναφέρονται αναλυτικά στην παράγραφο 4 του άρθρου 4 του ΚΕΠΥ, και συνοπτικά έχουν ως εξής:

   1.1 Είναι φορολογικά και ασφαλιστικά ενήμερος.

   1.2 Δεν έχει καταδικαστεί με οριστική απόφαση για παράβαση του περιβαλλοντικού, κοινωνικού και εργατικού δικαίου.

   1.3 Δεν έχει υποβάλει σοβαρές ψευδείς δηλώσεις, δεν έχει επιδείξει σοβαρή ή επαναλαμβανόμενη πλημμέλεια κατά την εκτέλεση ουσιώδους απαίτησης στο πλαίσιο προηγούμενης σύμβασης με αντικείμενο σχετικό με το προκηρυσσόμενο, που είχε ως αποτέλεσμα την πρόωρη καταγγελία της προηγούμενης σύμβασης, αποζημιώσεις ή άλλες παρόμοιες κυρώσεις.

   1.4 Δεν τελεί σε πτώχευση ούτε σε διαδικασία κήρυξης πτώχευσης, δεν τελεί σε κοινή εκκαθάριση ούτε υπό διαδικασία έκδοσης απόφασης κοινής εκκαθάρισης.

   1.5 Δεν έχει καταδικαστεί με οριστική απόφαση για σοβαρό επαγγελματικό παράπτωμα ή κάποιο από τα αδικήματα της διαφθοράς-δωροδοκίας, της συμμετοχής σε εγκληματική οργάνωση, της διάπραξης τρομοκρατικών εγκλημάτων, της παιδικής εργασίας, της νομιμοποίησης εσόδων από παράνομες δραστηριότητες και της απάτης σύμφωνα με την ισχύουσα νομοθεσία.

   1.6 Δεν έχει συνάψει συμφωνίες για στρέβλωση του ανταγωνισμού.

   1.7 Δεν έχει επηρεάσει με αθέμιτο τρόπο τη λήψη αποφάσεων, δεν έχει αποκτήσει εμπιστευτικές πληροφορίες, ή δεν έχει παράσχει παραπλανητικές πληροφορίες που σχετίζονται ουσιωδώς με τη διαδικασία ανάθεσης της σύμβασης.

   1.8 Δεν έχει υποπέσει σε παραβάσεις της εργατικής νομοθεσίας που επιφέρουν επιβολή σε βάρος του προστίμων και συνιστούν λόγο αποκλεισμού σύμφωνα με την κείμενη νομοθεσία.
   Δεν του έχει επιβληθεί η κύρωση του αποκλεισμού συμμετοχής σε εν εξελίξει και μελλοντικές διαδικασίες σύναψης δημοσίων συμβάσεων, σύμφωνα τις διατάξεις της κείμενης νομοθεσίας.

2. Δεν συντρέχει κατάσταση σύγκρουσης συμφερόντων σύμφωνα με τα προβλεπόμενα στην Πρόσκληση.

3. Ο Προσφέρων δεσμεύεται, εφόσον ζητηθεί από την αρμόδια Υπηρεσία της ΔΕΗ, να προσκομίσει εντός δέκα (10) ημερών από τη γνωστοποίηση του αιτήματος, τα αντίστοιχα αποδεικτικά - δικαιολογητικά των πιο πάνω δηλωθέντων, όπως αυτά αναφέρονται και με τον τρόπο που προβλέπεται στην παράγραφο 13.2.Β του τεύχους 1 της Πρόσκλησης.

Ημερομηνία: .....

Ο Δηλών

(Ονοματεπώνυμο – ιδιότητα- υπογραφή)

ΟΔΗΓΙΕΣ

[1] Αναγράφεται η επωνυμία του προσφέροντος

Υ Π Ο Δ Ε Ι Γ Μ Α

ΔΗΛΩΣΗ ΠΕΡΙ ΜΗ ΣΥΝΔΡΟΜΗΣ ΛΟΓΩΝ ΑΠΟΚΛΕΙΣΜΟΥ ΠΑΡΕΧΟΝΤΟΣ ΣΤΗΡΙΞΗ
(Καλύπτει την παράγραφο 13.2.6 του τεύχους 1 της Πρόσκλησης)

Ο υπογράφων ως εκπρόσωπος του Παρέχοντος Στήριξη .....[1]..... στον προσφέροντα ..... για τη Διαδικασία ....., δηλώνω ότι:

1. Ο Παρέχων Στήριξη μέχρι την ημέρα διενέργειας της πιο πάνω Διαδικασίας δεν εμπίπτει σε κανέναν από τους λόγους αποκλεισμού συμμετοχής του στην παρούσα διαδικασία, που αναφέρονται αναλυτικά στην παράγραφο 4 του άρθρου 4 του ΚΕΠΥ, και συνοπτικά έχουν ως εξής:

   1.1 Είναι φορολογικά και ασφαλιστικά ενήμερος.

   1.2 Δεν έχει καταδικαστεί με οριστική απόφαση για παράβαση του περιβαλλοντικού, κοινωνικού και εργατικού δικαίου.

   1.3 Δεν έχει υποβάλει σοβαρές ψευδείς δηλώσεις, δεν έχει επιδείξει σοβαρή ή επαναλαμβανόμενη πλημμέλεια κατά την εκτέλεση ουσιώδους απαίτησης στο πλαίσιο προηγούμενης σύμβασης με αντικείμενο σχετικό με την παρεχόμενη στήριξη, που είχε ως αποτέλεσμα την πρόωρη καταγγελία της προηγούμενης σύμβασης, αποζημιώσεις ή άλλες παρόμοιες κυρώσεις.

   1.4 Δεν τελεί σε πτώχευση ούτε σε διαδικασία κήρυξης πτώχευσης, δεν τελεί σε κοινή εκκαθάριση ούτε υπό διαδικασία έκδοσης απόφασης κοινής εκκαθάρισης.

   1.5 Δεν έχει καταδικαστεί με οριστική απόφαση για σοβαρό επαγγελματικό παράπτωμα ή κάποιο από τα αδικήματα της διαφθοράς-δωροδοκίας, της συμμετοχής σε εγκληματική οργάνωση, της διάπραξης τρομοκρατικών εγκλημάτων, της παιδικής εργασίας, της νομιμοποίησης εσόδων από παράνομες δραστηριότητες και της απάτης σύμφωνα με την ισχύουσα νομοθεσία.

   1.6 Δεν έχει συνάψει συμφωνίες για στρέβλωση του ανταγωνισμού.

   1.7 Δεν έχει επηρεάσει με αθέμιτο τρόπο τη λήψη αποφάσεων, δεν έχει αποκτήσει εμπιστευτικές πληροφορίες, ή δεν έχει παράσχει παραπλανητικές πληροφορίες που σχετίζονται ουσιωδώς με τη διαδικασία ανάθεσης της σύμβασης.

   1.8 [2]Δεν έχει υποπέσει σε παραβάσεις της εργατικής νομοθεσίας που επιφέρουν επιβολή σε βάρος του προστίμων και συνιστούν λόγο αποκλεισμού σύμφωνα με την κείμενη νομοθεσία.
   Δεν του έχει επιβληθεί η κύρωση του αποκλεισμού συμμετοχής σε εν εξελίξει και μελλοντικές διαδικασίες σύναψης δημοσίων συμβάσεων, σύμφωνα τις διατάξεις της κείμενης νομοθεσίας.

2. Δεν συντρέχει κατάσταση σύγκρουσης συμφερόντων σύμφωνα με τα προβλεπόμενα στην Πρόσκληση.

3. Ο Παρέχων Στήριξη δεσμεύεται, εφόσον ζητηθεί από την αρμόδια Υπηρεσία της ΔΕΗ, να θέσει στη διάθεση του Προσφέροντος ώστε αυτός να προσκομίσει εντός δέκα (10) ημερών από τη γνωστοποίηση του αιτήματος, τα αντίστοιχα αποδεικτικά - δικαιολογητικά των πιο πάνω δηλωθέντων, όπως αυτά αναφέρονται και με τον τρόπο που προβλέπεται στην παράγραφο 13.2.Β του τεύχους 1 της Πρόσκλησης.

Ημερομηνία: .....

Ο Δηλών

(Ονοματεπώνυμο – ιδιότητα- υπογραφή)

ΟΔΗΓΙΕΣ

[1] Αναγράφεται η επωνυμία του προσφέροντος

[2] Η παράγραφος 1.8 περιλαμβάνεται ως ακολούθως:

- Στις συμβάσεις καθαρισμού και φύλαξης των εγκαταστάσεων με προϋπολογισμένη δαπάνη άνω του ποσού των δύο χιλιάδων και πεντακοσίων Ευρώ (2.500,00 €)
- Στις λοιπές συμβάσεις με προϋπολογισμένη δαπάνη μεγαλύτερη του ποσού των είκοσι χιλιάδων Ευρώ (20.000,00€)

Υ Π Ο Δ Ε Ι Γ Μ Α

ΔΗΛΩΣΗ ΣΥΝΥΠΕΥΘΥΝΟΤΗΤΑΣ

Σε περίπτωση Σύμπραξης / Ένωσης φυσικών ή και νομικών προσώπων
(καλύπτει την παράγραφο 13.2.5 του τεύχους 1 της Πρόσκλησης)

Τα υπογράφοντα μέλη ……[1]…… για τη **«Μηχανουργική Υποστήριξη Συντήρησης Συγκροτημάτων μέσης ισχύος Μονάδας V ΑΗΣ Κερατέας- Λαυρίου»**

1. ……

2. ……

3. ……

δηλώνουμε ότι στο πλαίσιο της υποβολής της Προσφοράς μας στην πιο πάνω διαδικασία, και σε περίπτωση ανάθεσης της σύμβασης σε εμάς, θα είμαστε πλήρως υπεύθυνοι απέναντι στη ΔΕΗ, από κοινού, αδιαίρετα και σε ολόκληρο κατά την εκτέλεση των υποχρεώσεών μας που απορρέουν από την Προσφορά μας και από τη σύμβαση.

Ημερομηνία: ……

Οι Δηλούντες

(Ονοματεπώνυμο – ιδιότητα- υπογραφή)

ΟΔΗΓΙΕΣ

[1] Αναγράφεται ανάλογα με τη μορφή του προσφέροντος π.χ. «της σύμπραξης» ή «της ένωσης» ή «της κοινοπραξίας»

Υ Π Ο Δ Ε Ι Γ Μ Α

ΕΓΓΥΗΤΙΚΗ ΕΠΙΣΤΟΛΗ ΣΥΜΜΕΤΟΧΗΣ

Ημερομηνία:

Προς

τη ΔΗΜΟΣΙΑ ΕΠΙΧΕΙΡΗΣΗ ΗΛΕΚΤΡΙΣΜΟΥ Α.Ε.
Χαλκοκονδύλη 30, 104 32 ΑΘΗΝΑ

Σας γνωρίζουμε ότι εγγυόμαστε ανέκκλητα και ανεπιφύλακτα έναντί σας υπέρ του Προσφέροντα σας:

.....[1].....

παραιτούμενοι ρητά ανέκκλητα και ανεπιφύλακτα από την ένσταση της διζήσεως και διαιρέσεως, καθώς και από τις μη προσωποπαγείς ενστάσεις του πρωτοφειλέτη, ευθυνόμενοι σε ολόκληρο και ως αυτοφειλέτες και μέχρι του ποσού των .....[2]....., για τη συμμετοχή του παραπάνω Προσφέροντα στη διενεργούμενη Διαδικασία Επιλογής με αντικείμενο ....., σύμφωνα με την υπ' αριθ. ..... Πρόσκληση σας και των συμπληρωμάτων αυτής, αντίγραφο των οποίων μας παραδόθηκε, βεβαιώνεται δε με την παρούσα η λήψη τούτου.

Σε κάθε περίπτωση κατά την οποία, σύμφωνα με την εγγύηση, θα κρίνατε ότι ο παραπάνω Προσφέρων παρέβη οποιαδήποτε υποχρέωσή του από εκείνες τις οποίες ανέλαβε με τη συμμετοχή του στη Διαδικασία Επιλογής, αναλαμβάνουμε την υποχρέωση με την παρούσα να σας καταβάλουμε αμελλητί και σε κάθε περίπτωση εντός πέντε (5) ημερών από την έγγραφη ειδοποίησή σας, χωρίς καμιά από μέρους μας αντίρρηση, αμφισβήτηση ή ένσταση και χωρίς να ερευνηθεί το βάσιμο ή μη της απαίτησής σας, το ποσό της εγγύησης στο σύνολό του ή μέρος του, σύμφωνα με τις οδηγίες σας και αμέσως μετά το σχετικό αίτημά σας, χωρίς να απαιτείται για την παραπάνω πληρωμή οποιαδήποτε εξουσιοδότηση, ενέργεια ή συγκατάθεση του Προσφέροντα και χωρίς να ληφθεί υπόψη οποιαδήποτε τυχόν σχετική αντίρρησή του, ένσταση, επιφύλαξη ή προσφυγή του στα Δικαστήρια ή τη Διαιτησία, με αίτημα τη μη κατάπτωση της παρούσας ή τη θέση της υπό δικαστική μεσεγγύηση.

Η εγγύηση αυτή αφορά αποκλειστικά και μόνο τις υποχρεώσεις του εν λόγω Προσφέροντα, που απορρέουν από τη συμμετοχή του στην παραπάνω Διαδικασία Επιλογής μέχρι και της υπογραφής της σχετικής σύμβασης, σε περίπτωση κατακύρωσης σε αυτόν και της παράδοσης από αυτόν σε σας Εγγυητικής Επιστολής Καλής Εκτέλεσης, σύμφωνα με τις οδηγίες σας, σε καμία όμως περίπτωση η εγγύηση αυτή δεν θα αφορά τις υποχρεώσεις που απορρέουν από την εκτέλεση της σύμβασης αυτής.

Ο χρόνος ισχύος της παρούσας υπερβαίνει κατά τριάντα (30) ημέρες το χρόνο ισχύος της Προσφοράς του προσφέροντα.

Δεδομένου δε ότι ο προσφέρων αποδέχεται με τη συμμετοχή του στην ανωτέρω διαδικασία επιλογής την παράταση της ισχύος της προσφοράς του:

α) μετά το πέρας της προαναφερόμενης χρονικής ισχύος της, κατά διαδοχικά διαστήματα τριάντα (30) ημερών, εκτός εάν προ της εκάστοτε ημερομηνίας λήξεώς της δηλώσει το αντίθετο και δεν την παρατείνει, και
β) μετά τη γνωστοποίηση σε αυτόν της απόφασης κατακύρωσης και μέχρι την υπογραφή της σύμβασης,

αποδεχόμαστε ότι η παρούσα είναι ισχυρή πλέον των τριάντα (30) ημερών των υπό στοιχεία α) και β) ανωτέρω χρονικών περιόδων ισχύος της προσφοράς του προσφέροντα .
Για παράταση κατά τα παραπάνω της ισχύος της Εγγυητικής πέραν των δώδεκα (12) μηνών από την καταληκτική ημερομηνία υποβολής των προσφορών, απαιτείται η προηγούμενη συναίνεσή μας.

Η Εγγυητική Επιστολή θα επιστραφεί σε μας, μαζί με γραπτή δήλωσή σας, που θα μας απαλλάσσει από αυτήν την εγγύηση.

ΟΔΗΓΙΕΣ

[1] Ανάλογα με τη μορφή του προσφέροντα αναγράφεται από τον εκδότη της εγγυητικής επιστολής μια από τις παρακάτω επιλογές:

- Σε περίπτωση φυσικού προσώπου: …… (ονοματεπώνυμο, πατρώνυμο) ……, …… (ΑΦΜ) ……, …… (δ/νση) …… ή

- Σε περίπτωση νομικού προσώπου: …… (επωνυμία) ……, …… (ΑΦΜ) ……, …… (δ/νση έδρας) …… ή

- Σε περίπτωση Σύμπραξης/Ένωσης: των φυσικών ή νομικών προσώπων

  α) …… (επωνυμία) ……, …… (ΑΦΜ) ……, …… (δ/νση κατοικίας ή έδρας) ……
  β) …… (επωνυμία) ……, …… (ΑΦΜ) ……, …… (δ/νση κατοικίας ή έδρας) ……
  …… κ.ο.κ. ……
  που ενεργούν εν προκειμένω ως Σύμπραξη/Ένωση και ευθύνονται εις ολόκληρον το κάθε μέλος έναντι της ΔΕΗ

[2] Αναγράφεται σε ευρώ το ποσό ολογράφως και αριθμητικώς

Υ Π Ο Δ Ε Ι Γ Μ Α

ΕΓΓΥΗΤΙΚΗ ΕΠΙΣΤΟΛΗ ΚΑΛΗΣ ΕΚΤΕΛΕΣΗΣ

Ημερομηνία:

Προς

τη ΔΗΜΟΣΙΑ ΕΠΙΧΕΙΡΗΣΗ ΗΛΕΚΤΡΙΣΜΟΥ Α.Ε.
Χαλκοκονδύλη 30, 104 32 ΑΘΗΝΑ

Σας γνωρίζουμε ότι εγγυόμαστε ανέκκλητα και ανεπιφύλακτα έναντί σας υπέρ του Αντισυμβαλλόμενου σας:

……[1]……

παραιτούμενοι ρητά ανέκκλητα και ανεπιφύλακτα από την ένσταση της διζήσεως και διαιρέσεως, καθώς και από τις μη προσωποπαγείς ενστάσεις του πρωτοφειλέτη ευθυνόμενοι σε ολόκληρο και ως αυτοφειλέτες και μέχρι του ποσού των ……[2]……, για την ακριβή, πιστή και εμπρόθεσμη εκπλήρωση όλων των υποχρεώσεων του Αντισυμβαλλόμενου της υπ' αριθ. …… Σύμβασης και των τυχόν συμπληρωμάτων της και σε απόλυτη συμμόρφωση προς τους όρους της. Αντίγραφο αυτής μας παραδόθηκε, βεβαιώνεται δε με την παρούσα η λήψη του. Το αντικείμενο της Σύμβασης είναι …… με συμβατικό προϋπολογισμό ……

Σε κάθε περίπτωση κατά την οποία, σύμφωνα με την εγγύηση, θα κρίνατε ότι ο παραπάνω Αντισυμβαλλόμενος παρέβη οποιαδήποτε υποχρέωσή του από εκείνες τις οποίες ανέλαβε με τη παραπάνω Σύμβαση, αναλαμβάνουμε την υποχρέωση με την παρούσα να σας καταβάλουμε αμελλητί και σε κάθε περίπτωση εντός πέντε (5) ημερών από την έγγραφη ειδοποίησή σας, χωρίς καμιά από μέρους μας αντίρρηση, αμφισβήτηση ή ένσταση και χωρίς να ερευνηθεί το βάσιμο ή μη της απαίτησής σας, το ποσό της εγγύησης στο σύνολό του ή μέρος του, σύμφωνα με τις οδηγίες σας και αμέσως μετά το σχετικό αίτημά σας, χωρίς να απαιτείται για την παραπάνω πληρωμή οποιαδήποτε εξουσιοδότηση, ενέργεια ή συγκατάθεση του Αντισυμβαλλόμενου και χωρίς να ληφθεί υπόψη οποιαδήποτε τυχόν σχετική αντίρρησή του, ένσταση, επιφύλαξη ή προσφυγή του στα Δικαστήρια ή τη Διαιτησία, με αίτημα τη μη κατάπτωση της παρούσας ή τη θέση της υπό δικαστική μεσεγγύηση.

Τέλος, σας δηλώνουμε ότι η εγγύησή μας θα εξακολουθεί να ισχύει μέχρι την εκπλήρωση από τον Αντισυμβαλλόμενο όλων των υποχρεώσεων, τις οποίες έχει αναλάβει με την αντίστοιχη Σύμβαση και τα τυχόν συμπληρώματά της, αλλά όχι αργότερα από ……[3]…… μήνες από την ημερομηνία θέσης σε ισχύ της Σύμβασης. Η ισχύς της παρούσας εγγυητικής θα παραταθεί πέραν της προαναφερθείσας προθεσμίας χωρίς καμία αντίρρηση εκ μέρους μας, μετά από γραπτή απαίτησή σας που θα υποβληθεί πριν από την ημερομηνία λήξης ισχύος της παρούσας εγγυητικής.

Με τη λήξη της περιόδου εγγύησης ή της παράτασης που ζητήθηκε από τη ΔΕΗ, η παρούσα εγγυητική θα επιστραφεί σε εμάς μαζί με έγγραφη δήλωσή σας, η οποία θα μας απαλλάσσει από την εγγυοδοσία μας.

ΟΔΗΓΙΕΣ

[1] Ανάλογα με τη μορφή του Αντισυμβαλλόμενου αναγράφεται από τον εκδότη της εγγυητικής επιστολής μια από τις παρακάτω επιλογές:

- Σε περίπτωση φυσικού προσώπου: …… (ονοματεπώνυμο, πατρώνυμο) ……, …… (ΑΦΜ) ……, …… (δ/νση) …… ή

- Σε περίπτωση νομικού προσώπου: …… (επωνυμία) ……, …… (ΑΦΜ) ……, …… (δ/νση έδρας) …… ή

- Σε περίπτωση Σύμπραξης/Ένωσης: των φυσικών ή νομικών προσώπων

α) …… (επωνυμία) ……, …… (ΑΦΜ) ……, …… (δ/νση κατοικίας ή έδρας) ……
β) …… (επωνυμία) ……, …… (ΑΦΜ) ……, …… (δ/νση κατοικίας ή έδρας) ……
…… κ.ο.κ. ……
που ενεργούν εν προκειμένω ως Σύμπραξη/Ένωση και ευθύνονται εις ολόκληρον το κάθε μέλος έναντι της ΔΕΗ

[2] Αναγράφεται σε ευρώ το ποσό ολογράφως και αριθμητικώς

[3] Συμπληρώνεται από την Υπηρεσία που διενεργεί τη διαδικασία ο κατάλληλος αριθμός μηνών συνεκτιμώντας το χρονοδιάγραμμα ολοκλήρωσης της σύμβασης πλέον ενός περιθωρίου από τυχόν καθυστερήσεις (π.χ. σε έργο με χρονικό ορίζοντα οριστικής παραλαβής τους δεκαοχτώ (18) μήνες μπορεί η μέγιστη ισχύς της εγγυητικής να ορίζεται σε είκοσι δύο (22) μήνες)