Q Project:

LAVRION V-CCPP
DMKT 11 21 302

Title: Motor Drawing

(HP BoilerFeed Water Pumps 5 LAC30/40 AP001)

Supplier Document No:	-	Issue: 1
KKS Document No:	5-LAC-EDP-FPD-254	
Purpose of issue: For Approval		Date: 15/09/04

00-Y-X-10302-F3/I Issue 1

Prepared: CL

Reviewed: SW

Approved: CW

TYPE	OUTPUT		POLE	TIME RATING	VOLTAGE V	HZ	SYN. SPEED RPM
	HP.	KW.					
AECW—S2002		1750	2	CONT.	6000	50	3000

TOTALLY ENCLOSED WATER—TO—AIR COOLED TYPE, SQUIRREL CAGE ROTOR.

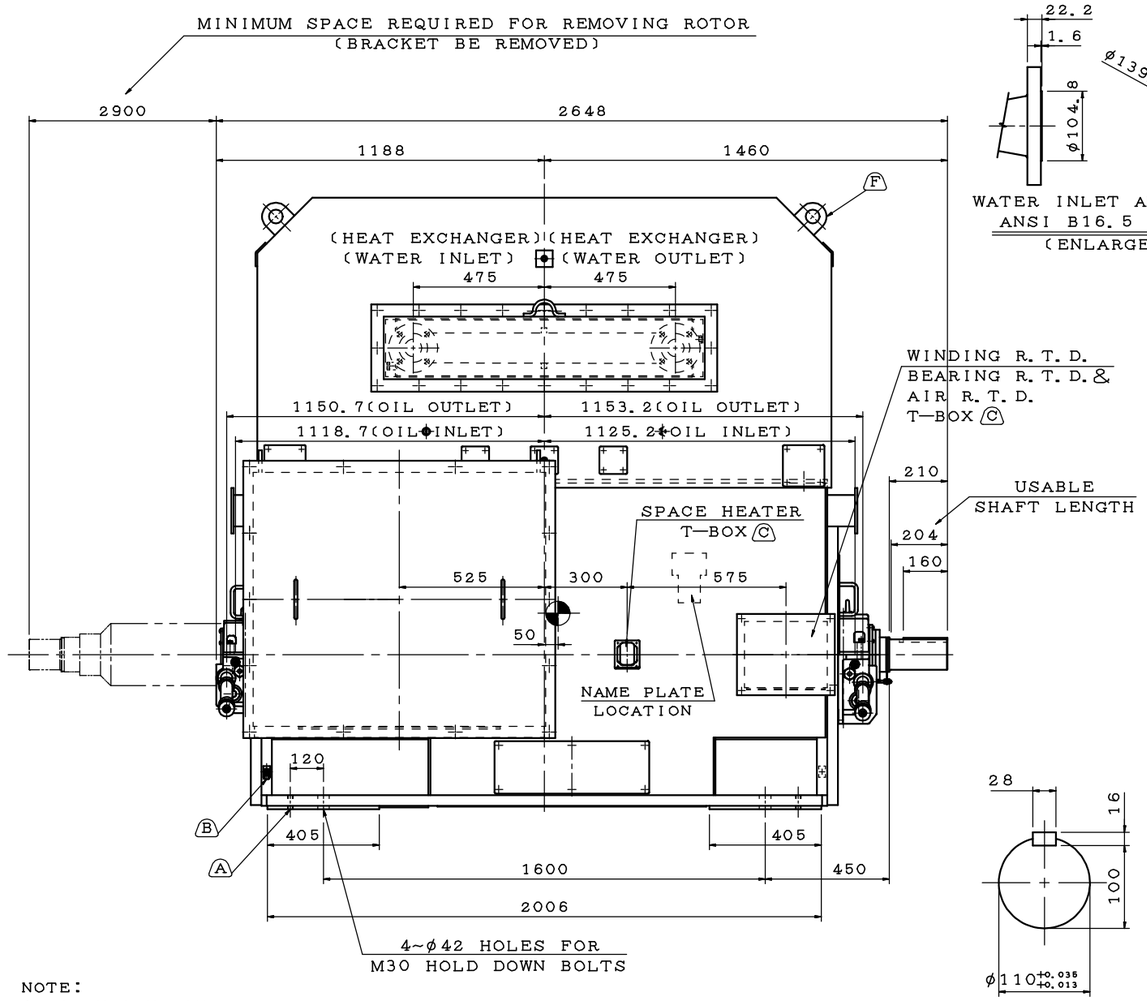

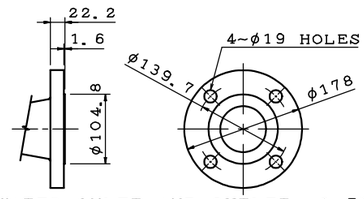

WATER INLET AND OUTLET, 2.5″ NOM.
ANSI B16.5 150LB FLANGE, R.F.
(ENLARGED VIEW)

SHAFT END
(ENLARGED VIEW)

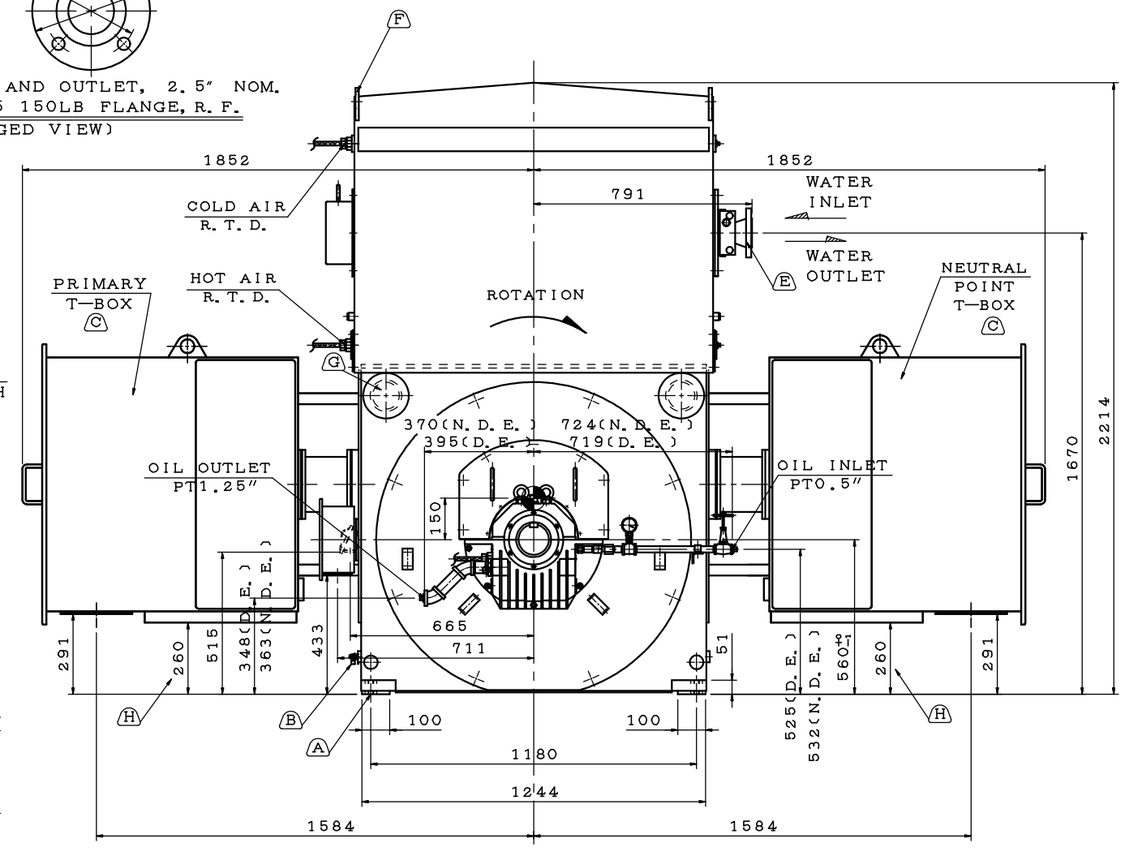

NOTE:

1. DIMENSIONS IN MM.
2. FRAME NO. 560D.
3. F CLASS INSULATION.
4. FOR DIRECT FLEXIBLE COUPLING.
5. SLEEVE TYPE BEARING, AXIAL THRUST LOAD NOT ALLOWED.
6. THE MOTOR ENDPLAY IS ±7MM. A LIMITED END FLOAT TYPE COUPLING IS REQUIRED TO LIMIT ENDPLAY TO ±2.4MM.
7. BEARING SIZE: DRIVE END: 11—110(UNINSULATED)
   NON—DRIVE END: 9—90 (INSULATED)
8. NON—DRIVE END BEARING LINER(SHELL) IS INSULATED FROM THE HOUSING. METAL CONNECTIONS MADE TO THE BEARING SHELL MUST BE INSULATED TO PREVENT AN INSULATION SHORT CIRCUIT. METAL CONNECTIONS MADE TO THE HOUSING DO NOT NEED TO BE INSULATED.
9. BEARING LUBRICATION: FORCED OIL LUBRICATION
   A. OIL VISCOSITY: ISO VG32(140~160SSU AT 100°F)
   B. OIL FLOW RATE: 1.9 L/MIN FOR EACH BEARING.
   C. OIL INLET PRESSURE: 1.0 KG/CM², MAX.
   D. OIL INLET ORIFICE DIAMETER: 1.98MM FOR EACH BEARING
   E. OIL INLET TEMPERATURE: 49°C, MAX.
10. EXTERNAL OIL SUPPLY UNIT TO BE PREPARED BY THE CUSTOMER.
11. HEAT EXCHANGER:
    A. WATER INLET PRESSURE: MIN.: 2.5KG/CM². MAX.: 5.0KG/CM².
    B. WATER INLET TEMPERATURE: MIN.: 5°C. MAX.: 32°C.
    C. WATER FLOW RATE: MIN.: 390 L/MIN. MAX.: 425 L/MIN.
    D. WATER PRESSURE DROP: LESS THAN 1.0 KG/CM².
    E. IN CASE OF DANGER OF FROST, THE WATER MUST BE PREVENTED FROM FREEZING BY APPROPRIATE MEASURES.
12. EXTERNAL WATER SUPPLY UNIT TO BE PREPARED BY THE CUSTOMER.
13. WITH SPACE HEATER: 3ϕ, 400V, 500W.
14. WITH WINDING R.T.D.: PT 100Ω/0°C, 6PCS.
15. WITH BEARING R.T.D.: PT 100Ω/0°C, DUAL ELEMENT, 2PCS.
16. WITH AIR CIRCUIT R.T.D.: PT 100Ω/0°C, 2PCS.
17. NOISE: BELOW 76±3dBA AT 1 METER DISTANCE NO LOAD.
18. ENCLOSURE: IP55.
19. MOTOR APPROX. WEIGHT: 7600KGS.
    ROTOR APPROX. WEIGHT: 1660KGS.
20. TWMC IS NOT RESPONSIBLE FOR FOUNDATION DESIGN. THE SUPPORT REACTIONS NECESSARY FOR FOUNDATION DESIGN ARE AS FOLLOWS —KGS PER BOLT AT CENTERLINE OF HOLD DOWN BOLT HOLES:
    STATIC X = MOTOR WEIGHT/4
    RATED MOTOR TORQUE X = MOTOR WEIGHT/4 ± 240 KGS.
    MAXIMUM MOTOR TORQUE X = MOTOR WEIGHT/4 ± 1824 KGS.

(A) M20 VERTICAL JACKING HOLE, ONE HOLE PER FOOT.

(B) TWO M10 TAPPED GROUNDING PADS ON FRAME, DIAGONALLY OPPOSITE, WITH ONLY ONE GROUNDING STUD & (R38—10) TERMINAL LOCATED AS SHOWN.

(C) REMOVABLE COVER FOR CABLE ENTRY TO BE DRILLED BY THE CUSTOMER.

(D) OIL DRAIN LINES SHOULD BE SLOPED A MINIMUM OF 45MM PER METER. FOR PROPER DRAINING, A VENT MUST BE PLACED IN THE DRAIN LINES AS CLOSE TO THE MOTOR BEARINGS AS POSSIBLE.

(E) NO PIPE WORK LOADS ARE TO BE TAKEN BY HEAT EXCHANGER CONNECTIONS.

(F) FOUR LIFTING LUGS ON AIR CABINET FOR LIFTING AIR CABINET AND HEAT EXCHANGER ONLY. DO NOT USE FOR LIFTING ENTIRE MOTOR.

(G) FOUR LIFTING LUGS ON FRAME FOR LIFTING ENTIRE MOTOR. A SPREADER BAR IS REQUIRED WHEN LIFTING MOTOR WITH AIR CABINET ATTACHED.

(H) PRIMARY T—BOX AND NEUTRAL POINT T—BOX ARE NOT SELF—SUPPORTING. CUSTOMER MUST PROVIDE SUPPORT TO THE DIMENSION SHOWN.
THESE TWO T—BOXES TO BE SHIPPED LOOSE WITH MOTOR.

	NAME	DATE	
DWN.	C. LEONG	AUG 17 2004	OUTLINE DIMENSION
CHKD.	S. WANG	AUG 17 2004	3—PHASE INDUCTION MOTOR
APPD.	C. WANG	AUG 17 2004	
DWG NO. 3A040F289		REV: 00	TECO Westinghouse

REV.	DATE	PREP.	REVISED	APPRVD	ISSUDE FOR

PUBLIC POWER CORPORATION
LAVRION V CC PP
DMKT 11 21 302

METKA

OUTLINE DIMENSION
3—PHASE INDUCTION MOTOR

EMPRESARIOS AGRUPADOS

METKA DWG. No.	DIN
KKS DWG. No.	SCALE
HA DWG. No.	SHEET

PROPRIETARY INFORMATION
This document contains proprietary information of Empresarios Agrupados International,S.A. and is to be used solely for the Project and the purpose for which it is furnished. It may not be disclosed to others for a different use without the written permission of Empresarios Agrupados International,S.A.
Contains information for the design of structures, systems and components.....YES NO
VERIFICATION: N/A ☐ PEER/SUP. ☐ VERIFIER ☐ SME ☐
DOCUMENT PREPARED WITH CAD DO NOT MODIFY MANUALLY